Calhoun: The NPS Institutional Archive

DSpace Repository

Theses and Dissertations | 1. Thesis and Dissertation Collection, all items

2011-12

Aerodynamic analysis of a canard missile configuration using ANSYS-CFX

Wee, Hong Chuan

Monterey, California. Naval Postgraduate School

http://hdl.handle.net/10945/10707

This publication is a work of the U.S. Government as defined in Title 17, United States Code, Section 101. Copyright protection is not available for this work in the United States.

Downloaded from NPS Archive: Calhoun

Calhoun is the Naval Postgraduate School's public access digital repository for research materials and institutional publications created by the NPS community. Calhoun is named for Professor of Mathematics Guy K. Calhoun, NPS's first appointed -- and published -- scholarly author.

Dudley Knox Library / Naval Postgraduate School
411 Dyer Road / 1 University Circle
Monterey, California USA 93943

http://www.nps.edu/library

NAVAL POSTGRADUATE SCHOOL

MONTEREY, CALIFORNIA

THESIS

AERODYNAMIC ANALYSIS OF A CANARD MISSILE CONFIGURATION USING ANSYS-CFX

by

Hong Chuan Wee

December 2011

Thesis Advisor:	Maximilian Platzer
Second Reader:	Garth Hobson

Approved for public release; distribution is unlimited

THIS PAGE INTENTIONALLY LEFT BLANK

REPORT DOCUMENTATION PAGE			Form Approved OMB No. 0704-0188
Public reporting burden for this collection of information is estimated to average 1 hour per response, including the time for reviewing instruction, searching existing data sources, gathering and maintaining the data needed, and completing and reviewing the collection of information. Send comments regarding this burden estimate or any other aspect of this collection of information, including suggestions for reducing this burden, to Washington headquarters Services, Directorate for Information Operations and Reports, 1215 Jefferson Davis Highway, Suite 1204, Arlington, VA 22202-4302, and to the Office of Management and Budget, Paperwork Reduction Project (0704-0188) Washington DC 20503.			
1. AGENCY USE ONLY ***(Leave blank)***	**2. REPORT DATE** December 2011	**3. REPORT TYPE AND DATES COVERED** Master's Thesis	
4. TITLE AND SUBTITLE Aerodynamic Analysis of a Canard Missile Configuration using ANSYS-CFX			**5. FUNDING NUMBERS**
6. AUTHOR(S) Hong Chuan Wee			
7. PERFORMING ORGANIZATION NAME(S) AND ADDRESS(ES) Naval Postgraduate School Monterey, CA 93943-5000			**8. PERFORMING ORGANIZATION REPORT NUMBER**
9. SPONSORING /MONITORING AGENCY NAME(S) AND ADDRESS(ES) N/A			**10. SPONSORING/MONITORING AGENCY REPORT NUMBER**
11. SUPPLEMENTARY NOTES The views expressed in this thesis are those of the author and do not reflect the official policy or position of the Department of Defense or the U.S. Government. IRB Protocol number _____N/A_____.			
12a. DISTRIBUTION / AVAILABILITY STATEMENT Approved for public release; distribution is unlimited			**12b. DISTRIBUTION CODE**

13. ABSTRACT (maximum 200 words)

This study used the Computational Fluid Dynamics code, ANSYS-CFX to predict the static aerodynamic characteristics of a canard-wing missile configuration with a hemispherical nose, triangular wedge canards and fixed trapezoidal wings. The study was conducted for Mach numbers of 0.2, 0.8 and 1.2. The results were compared against experimental data from actual wind tunnel tests and data from a semi-empirical method, AP09. The ANSYS-CFX results showed good agreement for C_N, C_M, and C_L but less agreement for C_A when compared to the experimental results. The AP09 results also showed good agreement for C_N, C_M, and C_L but also showed less agreement for C_A.

14. SUBJECT TERMS ANSYS, CFX, canard, Computational Fluid Dynamics, missile, AP09.			**15. NUMBER OF PAGES** 115
			16. PRICE CODE
17. SECURITY CLASSIFICATION OF REPORT Unclassified	**18. SECURITY CLASSIFICATION OF THIS PAGE** Unclassified	**19. SECURITY CLASSIFICATION OF ABSTRACT** Unclassified	**20. LIMITATION OF ABSTRACT** UU

NSN 7540-01-280-5500

Standard Form 298 (Rev. 2-89)
Prescribed by ANSI Std. 239-18

THIS PAGE INTENTIONALLY LEFT BLANK

Approved for public release; distribution is unlimited

AERODYNAMIC ANALYSIS OF A CANARD MISSILE CONFIGURATION USING ANSYS-CFX

Hong Chuan Wee
Defence Science & Technology Agency, Singapore
B.Eng.(EEE), Nanyang Technological University, 2004

Submitted in partial fulfillment of the
requirements for the degree of

MASTER OF SCIENCE IN ENGINEERING SCIENCE
(MECHANICAL ENGINEERING)

from the

NAVAL POSTGRADUATE SCHOOL
December 2011

Author: Hong Chuan Wee

Approved by: Maximilian Platzer
Thesis Advisor

Garth Hobson
Second Reader

Knox Millsaps
Chair, Department of Mechanical and Aerospace Engineering

THIS PAGE INTENTIONALLY LEFT BLANK

ABSTRACT

This study used the Computational Fluid Dynamics code, ANSYS-CFX to predict the static aerodynamic characteristics of a canard-wing missile configuration with a hemispherical nose, triangular wedge canards and fixed trapezoidal wings. The study was conducted for Mach numbers of 0.2, 0.8 and 1.2. The results were compared against experimental data from actual wind tunnel tests and data from a semi-empirical method, AP09. The ANSYS-CFX results showed good agreement for C_N, C_M, and C_L but less agreement for C_A when compared to the experimental results. The AP09 results also showed good agreement for C_N, C_M, and C_L but also showed less agreement for C_A.

THIS PAGE INTENTIONALLY LEFT BLANK

TABLE OF CONTENTS

I. INTRODUCTION 1
- **A. CURRENT ANALYSIS TECHNIQUES 1**
- **B. RESEARCH OBJECTIVES 1**
- **C. OVERVIEW OF SOLIDWORKS AND MODEL CONSTRUCTION 1**
  - **1. Model Selection 2**
  - **2. Assumptions Made for the Model 3**
    - ***a. Exclusion of Missile Hangers 5***
    - ***b. Inclusion of a Hinge to Hold Canards to Body 5***
    - ***c. Seating of the Tail Wings 6***
    - ***d. Shape of the Wings and Canards 6***
    - ***e. Accuracy of Dimension Given in [1] and [2]. 6***
- **D. OVERVIEW OF ANSYS CFX 6**
- **E. INTRODUCTION TO AP09 ..... 7**

II. SETUP AND ANALYSIS WORKFLOW 9
- **A. MODEL CREATION USING SOLIDWORKS 9**
  - **1. Control Volume Sizing 9**
  - **2. Missile Design and Drawing 10**
- **B. IMPORT OF MODELS INTO DESIGNMODELER 10**
  - **1. Meshing 13**
  - **2. Common Mesh Settings 14**
  - **3. Inflation Settings 15**
  - **4. Mesh Quality 15**
- **C. SETUP OF CFX-PRE (SETUP) 16**
  - **1. General Setup 16**
  - **2. Assignment of Boundaries 18**
  - **3. Parameters Setup 18**
    - ***a. Analysis Type and Material Setup 18***
    - ***b. Inlet Setup 19***
    - ***c. Outlet Setup 19***
    - ***d. Opening Setup 20***
    - ***e. Symmetry Setup 21***
    - ***f. Solver Control Setup 21***
    - ***g. Expert Parameters 21***
- **D. OBTAINING SOLUTIONS FROM CFX 22**
  - **1. Starting the CFX-Solver Manager 22**
  - **2. Partitioning the Problem 22**
  - **3. Display Monitors 22**
  - **4. Displaying Simulation Results 24**
    - ***a. Flow Field Display 24***
    - ***b. Function Calculator 25***

III. RESULTS 27

A. COMPARISON OF EXPERIMENTAL CFX AND AP09 RESULTS. 27
1. Test case 1: Mach 0.2 27
a. Mesher Inflation Settings 27
b. Solver Run Times 27
c. Yplus Targets 28
d. Graphs of Experimental against ANSYS-CFX Data 28
e. Graphs of Experimental against AP09 Data 31
2. Test Case 2: Mach 0.8 34
a. Mesher Inflation Settings 34
b. Solver Run Times 34
c. Yplus Targets 35
d. Graphs of Experimental against ANSYS-CFX Data 35
e. Graphs of Experimental against AP09 Data 38
3. Test Case 3: Mach 1.2 41
a. Mesher Inflation Settings 41
b. Solver Run Times 41
c. Yplus Targets 42
d. Graphs of Experimental against ANSYS-CFX Data 42
e. Graphs of Experimental against AP09 Data 44

IV. CONCLUSIONS 47

V. RECOMMENDATIONS 49
A. USING OTHER SOLVERS 49
B. SOLVING FOR 3D BODY 49
C. ACCURACY OF EXPERIMENTAL RESULTS AND MODELS 49

LIST OF REFERENCES 51

APPENDIX A 53
A. MISSILE MODEL DRAWING STEPS IN SOLIDWORKS 53

APPENDIX B 77
A. AP09 INPUT INSTRUCTIONS 77

APPENDIX C 91
A. ANSYS-CFX AND EXPERIMENTAL RESULTS 91

APPENDIX D 93
A. AP09 AND EXPERIMENTAL RESULTS 93

INITIAL DISTRIBUTION LIST 95

LIST OF FIGURES

Figure 1. SolidWorks GUI. 2
Figure 2. Missile drawing and dimensions. From [2]. 3
Figure 3. Picture of AIM-9 Sidewinder....4
Figure 4. Picture depicting protruding bolts holding canard to hinge....4
Figure 5. Picture depicting the method of attachment of tail fins to fuselage....5
Figure 6. ANSYS GUI. 7
Figure 7. SolidWorks model of the control volume....10
Figure 8. ANSYS Workbench GUI showing CFX in workspace. 11
Figure 9. Control volume and missile model cutout. 12
Figure 10. Mesh of missile model and control volume for test case 1....16
Figure 11. Setup of control volume for AOA. 17
Figure 12. Alternative method for setup control volume for AOA....18
Figure 13. Boundary details for M=0.2 test case at 2 deg AOA. 19
Figure 14. Outlet settings. 20
Figure 15. Opening settings....21
Figure 16. Display monitors....23
Figure 17. Mach number distribution over the canard. 24
Figure 18. Vortex at canard leading edge....25
Figure 19. Function Calculator....26
Figure 20. Inflation settings for Mach 0.2 test case. 27
Figure 21. Graph of C_M versus Alpha for ANSYS-CFX M=0.2. 29
Figure 22. Graph of C_N versus Alpha for ANSYS-CFX M=0.2. 30
Figure 23. Graph of C_L versus Alpha for ANSYS-CFX M=0.2. 30
Figure 24. Graph of C_A vs. Alpha for ANSYS-CFX M=0.2....31
Figure 25. Graph of C_M versus Alpha for AP09 M=0.2....32
Figure 26. Graph of C_N versus Alpha for AP09 M=0.2. 32
Figure 27. Graph of C_L versus Alpha for AP09 M=0.2. 33
Figure 28. Graph of C_A versus Alpha for AP09 M=0.2. 33
Figure 29. Inflation settings for Mach 0.8 test case. 34
Figure 30. Graph of C_M versus Alpha for ANSYS-CFX M=0.8. 35
Figure 31. Graph of C_N versus Alpha for ANSYS-CFX M=0.8. 36
Figure 32. Graph of C_L versus Alpha for ANSYS-CFX M=0.8. 36
Figure 33. Graph of C_A versus Alpha for ANSYS-CFX M=0.8. 37
Figure 34. Graph of C_M versus Alpha for AP09 M=0.8....38
Figure 35. Graph of C_N versus Alpha for AP09 M=0.8. 39
Figure 36. Graph of C_L versus Alpha for AP09 M=0.8. 39
Figure 37. Graph of C_A versus Alpha for AP09 M=0.8. 40
Figure 38. Inflation settings for test case 3. 41
Figure 39. Graph of C_M versus Alpha for ANSYS-CFX M=1.2. 42
Figure 40. Graph of C_N versus Alpha for ANSYS-CFX M=1.2. 43
Figure 41. Graph of C_L versus Alpha for ANSYS-CFX M=1.2. 43
Figure 42. Graph of C_A versus Alpha for ANSYS-CFX M=1.2. 44

Figure 43. Graph of C_M versus Alpha for AP09 M=1.2.....44
Figure 44. Graph of C_N versus Alpha for AP09 M=1.2.....45
Figure 45. Graph of C_L versus Alpha for AP09 M=1.2.....45
Figure 46. Graph of C_A versus Alpha for AP09 M=1.2.....46
Figure 47. Placement of origin at missile moment reference.....54
Figure 48. Drawing of hemispherical nose.....55
Figure 49. Completed cross section of missile body.....56
Figure 50. Completed missile body.....57
Figure 51. Sketching hinge of canard.....58
Figure 52. Extruding canard hinge from center of missile body.....59
Figure 53. Add reference geometry window.....60
Figure 54. Adding reference plane at hinge tip.....61
Figure 55. Adding construction lines for canard root.....62
Figure 56. Adding canard thickness construction points.....63
Figure 57. Adding leading and trailing edge construction points for canard.....64
Figure 58. Drawing canard front wedge.....65
Figure 59. Drawing the trailing wedge of the canard.....66
Figure 60. Adding Canard Tip Plane.....67
Figure 61. Adding canard tip.....68
Figure 62. Loft to create canard.....69
Figure 63. Adding Tail root.....70
Figure 64. Adding Tail Tip reference plane.....71
Figure 65. Adding Tail Tip on Tail Tip Plane.....72
Figure 66. Loft to create tail.....73
Figure 67. Mating Tail to missile body.....74
Figure 68. Patterning of tail fins.....75
Figure 69. Completed missile model.....76
Figure 70. Creating a new Canard/Wing configuration.....77
Figure 71. Selecting input units as inches.....78
Figure 72. Canard/Wing-Body-Tail Geometry main window.....78
Figure 73. Nose input screen.....79
Figure 74. Input window for body cross sectional shape.....80
Figure 75. Afterbody length input.....80
Figure 76. Boattail input screen.....81
Figure 77. Canard input screen.....82
Figure 78. Tail wing input screen.....83
Figure 79. Input for reference geometry.....84
Figure 80. Viewing generated geometry.....84
Figure 81. Selection of “Alpha Sweep.”.....85
Figure 82. “Alpha Sweep” input window.....86
Figure 83. Selecting “Options (Feet).”.....86
Figure 84. “Options (Feet)” input window.....87
Figure 85. Generating results.....87
Figure 86. Results generation message.....88
Figure 87. Output file processing.....89

Figure 88. Export of data to text file. 89

THIS PAGE INTENTIONALLY LEFT BLANK

LIST OF TABLES

Table 1. Refinement settings. 13
Table 2. Common mesh settings. 14
Table 3. Inflation settings for each test case. 15
Table 4. ANSYS-CFX results for Mach 0.2. 91
Table 5. ANSYS-CFX results for Mach 0.8. 92
Table 6. ANSYS-CFX results for Mach 1.2. 92
Table 7. ANSYS-CFX results for Mach 0.2. 93
Table 8. ANSYS-CFX results for Mach 0.8. 94
Table 9. ANSYS-CFX results for Mach 1.2. 94

THIS PAGE INTENTIONALLY LEFT BLANK

LIST OF ACRONYMS AND ABBREVIATIONS

CAD	Computer Aided Design
CFD	Computational Fluid Dynamics
GUI	Graphical User Interface
NPS	Naval Postgraduate School
deg	Degree
ft	Feet
cm	Centimeter
m	Meter
m^2	Area in square meters
A	Reference area, 0.001408 m^2
l	Reference length, 94.27 cm
ms^{-1}	Meters per second
V	Velocity in meters per second
M	Mach number
AOA	Angle Of Attack
AP09	Aeroprediction 2009
F_X	Axial force
F_Y	Normal force
$Torque_Z$	Torque in Z direction
C_A	Axial-force Coefficient, $\frac{F_X}{\frac{1}{2}\rho V^2 A}$

C_L	Lift Coefficient, $\dfrac{F_L}{\frac{1}{2}\rho V^2 A}$
C_M	Pitching-moment Coefficient, $\dfrac{Torque_Z}{\frac{1}{2}\rho V^2 Al}$
C_N	Normal-force Coefficient, $\dfrac{F_Y}{\frac{1}{2}\rho V^2 A}$
Yplus	Non-dimensional wall distance

ACKNOWLEDGMENTS

I am deeply grateful for the guidance and support provided by Professor Platzer, Professor Hobson, Professor Brophy, Professor Gannon, David Dausen, Milan Vukcevich and my fellow classmates in the preparation of this thesis. Without your advice, this thesis would not have been completed.

I also thank my wife, Susan, for taking care of the family while I was hard at work with the countless simulation runs of CFX.

Finally, I thank my sponsor for this opportunity to study at the NPS. It has been a life-changing experience.

THIS PAGE INTENTIONALLY LEFT BLANK

I. INTRODUCTION

A. CURRENT ANALYSIS TECHNIQUES

The use of computers to solve the Navier-Stokes equations was a major breakthrough for the study of aerodynamic problems. Before this, engineers and researchers were left with only using actual wind tunnel tests and approximations to determine the aerodynamic characteristics of flight objects. Currently, there are three primary methods that can be used for the study of flight vehicles. The most obvious and time honored is the use of a wind tunnel and an actual model of the vehicle to be tested. This would yield the most accurate aerodynamic characteristics of the vehicle. The second method uses software that contains a database of wind tunnel tests and other analytical data to predict the aerodynamic characteristics of the flight vehicle. An example of such a program is Aeroprediction 2009 (AP09). The third method is to use Computational Fluid Dynamics (CFD) codes that solve the Navier-Stokers equations. Examples of such programs include NASA's OVERFLOW and commercially available codes like ANSYS-CFX.

B. RESEARCH OBJECTIVES

The aim of this research was to analyze a wind tunnel tested canard missile configuration using ANSYS-CFX to obtain the aerodynamic characteristics and compare these results with data obtained from the semi-empirical program, AP09, and wind tunnel tests.

C. OVERVIEW OF SOLIDWORKS AND MODEL CONSTRUCTION

SolidWorks 2010 was the 3D CAD software that was used for this study. The software was used to create 3D drawings of the missile which was then imported into ANSYS-CFX for analysis. The Figure 1 shows the graphical interface of SolidWorks and a model of the missile created in this environment.

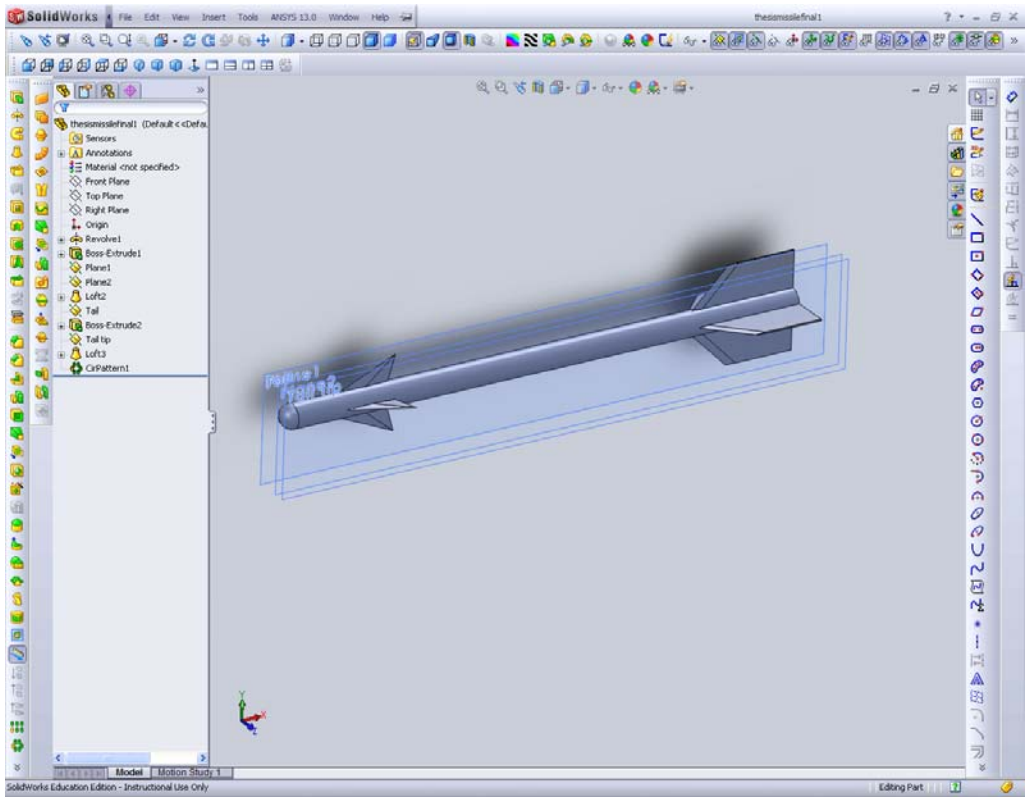

Figure 1. SolidWorks GUI.

1. Model Selection

The missile model chosen for this analysis consisted of a cylindrical body with triangular canards, a trapezoidal tail and a hemispherical nose. This model was chosen as wind tunnel data was readily available from NASA's Technical Memorandum by Graves and Fournier [1]. The report contained a schematic of the model used in the test as well as detailed data for C_M, C_A, C_N and C_L that was analyzed in this report. This model could also be input into AP09 for generation of data for comparison. A detailed description of the steps to draw the model in SolidWorks is presented in Appendix A. The drawing of the missile and all dimensions were obtained from [2]. Figure 2 shows an extract of the dimensions of the missile obtained from [2].

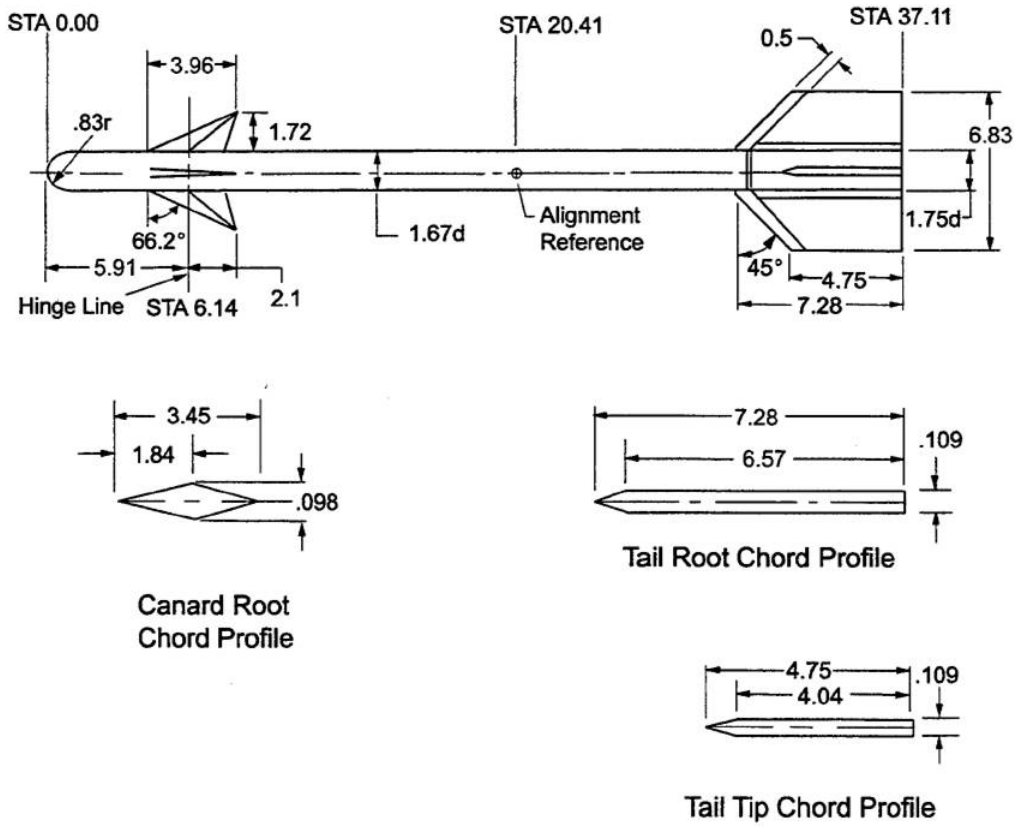

Figure 2. Missile drawing and dimensions. From [2].

2. Assumptions Made for the Model

Some assumptions and approximations were made in the drawing of the model used. The assumptions made may result in differences in computed values using ANSYS-CFX. However, investigations into similar actual missiles (Figure 3) show the construction and attention to details with regard to drag reduction to be poor. These missiles often had parts that were not aerodynamically shaped like bolts which protrude out of the missile body. Examples of this can be seen in Figure 4 and Figure 5.

Figure 3. Picture of AIM-9 Sidewinder.

Figure 4. Picture depicting protruding bolts holding canard to hinge.

Figure 5. Picture depicting the method of attachment of tail fins to fuselage.

Hence, it was deduced that the designers of these missiles were not as concerned about drag and hence C_A as they were with lift and pitching moment. Therefore, it is reasonable for the analysis using ANSYS-CFX to state the following assumptions:

a. Exclusion of Missile Hangers

Actual missiles would have fixtures to attach the pylon holding them to the aircraft. These are removed for simplicity and are expected to have an effect on C_A.

b. Inclusion of a Hinge to Hold Canards to Body

Actual missiles would have a shaft protruding out of the missile body linking the actuator to the canard. It was observed that these shafts could be even wider than the canard itself on actual missiles. This can be seen in Figure 4. In this model

however, they are represented by a shaft that is a fraction smaller in diameter compared to the canard at its thickest point. This approximation was expected to have an effect on C_A.

c. Seating of the Tail Wings

In this model, the seating for the tail wings was created by extruding the seat of the tail into the missile body. Appendix A illustrates this in Figure 67. In an actual missile, it was observed that the wings are clamped onto the body using support plates on both sides of the wings. This increased the diameter of the missile body and may have introduced additional drag. The model simplified this by attaching the wing directly on to the missile body and omitting the plates that held the wing down (Figure 5). This was also expected to have an effect on C_A.

d. Shape of the Wings and Canards

In the wind tunnel tests, it was highlighted that the canards and tail wings had the pointed edges rounded off but to an unknown radius. In the CAD model, rounding off the pointed edges by anything more than 0.01 mm reduced the overall length of the canards and wings by a large amount. It was also found previously that ANSYS could handle these pointed edges. Hence, it was decided to not to round off these edges in the CAD model.

e. Accuracy of Dimension Given in [1] and [2].

After the model was drawn in Solidworks, it was discovered that the canard leading edge sweep angle of 66.2˚ was not achievable if all other dimensions were followed. Measurement of the 3D model yielded a sweep angle of 66.52˚ instead. This was the value used in this simulation.

D. OVERVIEW OF ANSYS CFX

ANSYS-CFX is one of the two CFD codes that are part of the ANSYS suite of programs, the other CFD code being FLUENT. The primary difference in the two codes

is ANSYS-CFX solver uses finite element (cell vertex numerics) to discretize the domain whereas ANSY- FLUENT uses finite volume elements (cell- centered numerics). In this study, ANSYS-CFX is used. The version of ANSYS used is ANSYS Release 13.0.

ANSYS-CFX is integrated into AYSYS Workbench Environment, which offers users a graphical interface for which to access all the functions within ANSYS with simple drag-and-drop operations. ANSYS-CFX itself consists of five modules, Geometry (DesignModeler), Meshing, Setup (CFX-Pre), Solution (CFX Solver) and Results (CFX Post). Figure 6 shows the ANSYS Workbench GUI and the five modules of CFX.

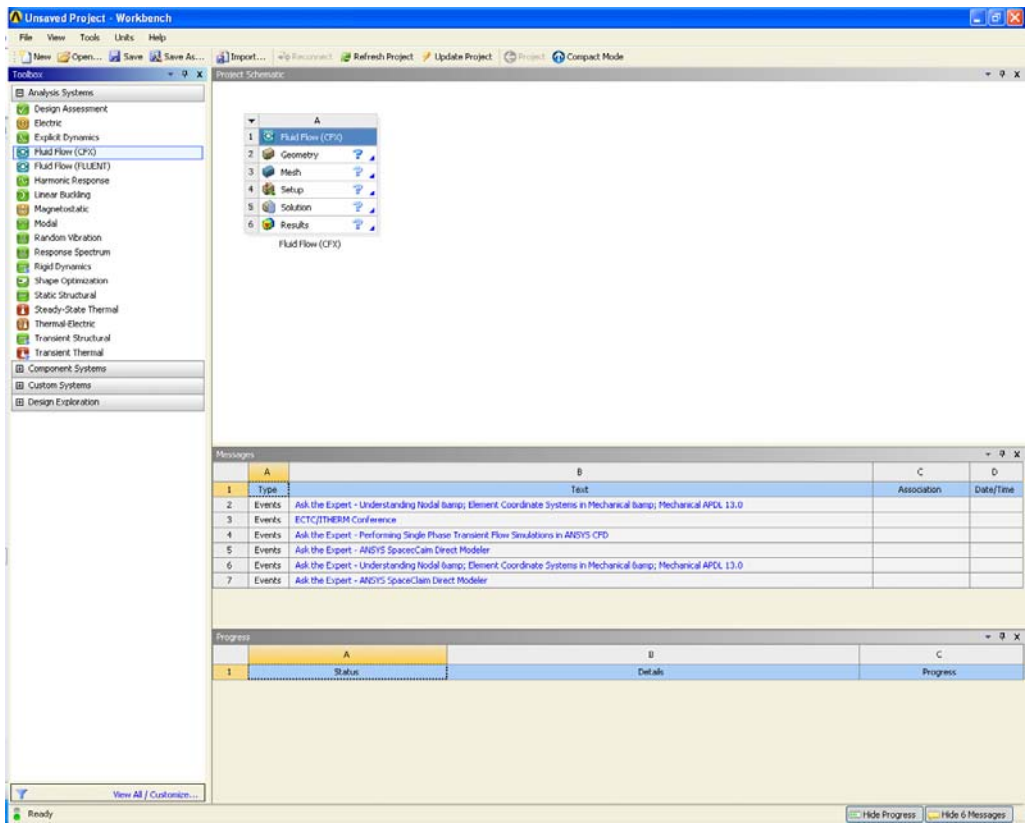

Figure 6. ANSYS GUI.

E. INTRODUCTION TO AP09

AP09 is a DOS based, semi-empirical computer program that computes the aerodynamic characteristics of flight vehicles. The program utilizes a simple interface for

input of the geometry of the flight vehicle to be tested. AP09's geometry database includes data for mortars, projectiles, bombs, rockets and missiles. AP09 was developed by Aeroprediction Incorporated and can compute aerodynamic characteristics for AOA of zero to 90 degrees and Mach numbers from Mach zero to Mach 20.

II. SETUP AND ANALYSIS WORKFLOW

A. MODEL CREATION USING SOLIDWORKS

SolidWorks was used to construct the 3D model of the missile and the corresponding control volume. CFX requires that a control volume has to be created around the missile model to be tested. The two drawings are generated as individual parts in SolidWorks and are saved in Parasolid Format (.x_t). This format was proven to be more robust and error free when performing the import into ANSYS DesignModeler. The two parts are then mated together using DesignModeler. This method was shown to be more robust than creating a mold of the object to be tested in SolidWorks.

1. Control Volume Sizing

The sizing of the control volume is important to the simulation. If improperly sized, the simulation run may not produce accurate results or may not run at all. It was noted that the optimal sizing of the control volume is between five to ten times the length of the model at the sides and back and at least the length of the model in front of it. In this study, the control volume was five times the model length at the sides and back and one length in the front of the missile model. Figure 7 shows the model of the control volume in SolidWorks. As there is symmetry in the missile model, the control volume chosen only contains half the missile model. This saves time computationally as the flow in the other half is not calculated and is assumed to be symmetrical across the chosen symmetry plane. This assumption is valid for cases where the AOA is small. As the AOA increases, asymmetric flow fields may form and the analysis has to be done with the complete 3D model of the missile and not the half body.

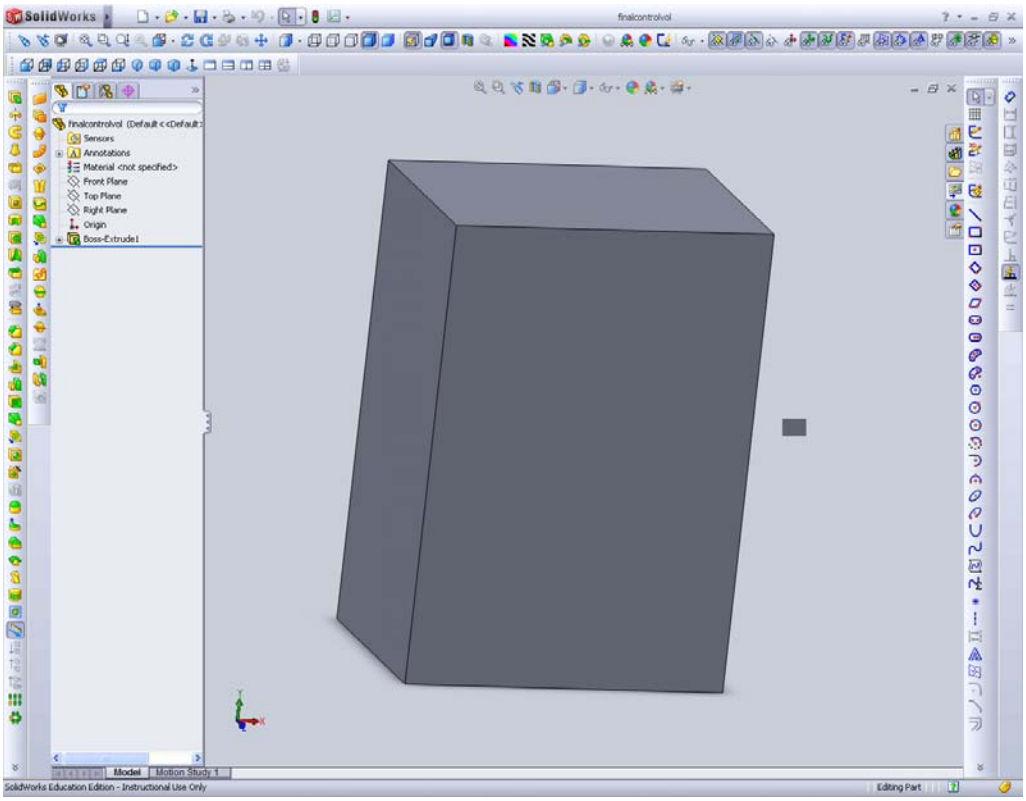

Figure 7. SolidWorks model of the control volume.

2. Missile Design and Drawing

The steps used for the drawing of the 3D missile model are detailed in Appendix A. The dimensions for the model were obtained from [2]. Figure 1 shows the model of the missile drawn in SolidWorks.

B. IMPORT OF MODELS INTO DESIGNMODELER

ANSYS Workbench is first started and the CFX module is dragged into the main workspace, as shown in Figure 8.

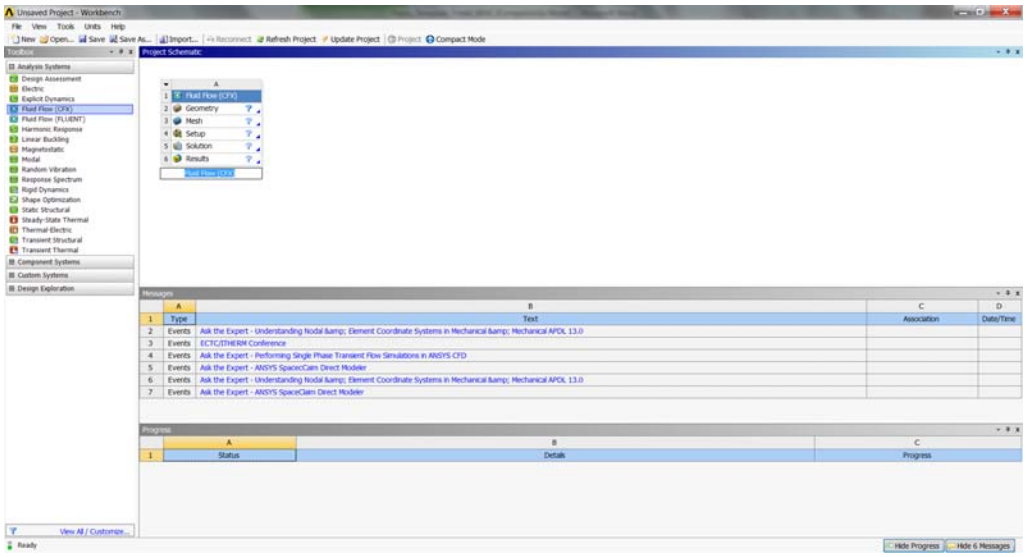

Figure 8. ANSYS Workbench GUI showing CFX in workspace.

DesignModeler is then started by double clicking on the “Geometry” tab in the CFX workspace. After DesignModeler loads, click “File” and select “Import External Geometry File…..”

In the pop-up dialog, select the parasolid file of the control volume and click “Open.” This will return you to DesignModeler. Check in the “Details view” that the “Operation” selected is “Add material.” Click “Generate” to generate the control volume in DesignModeler. Add the missile model now by repeating the same steps for importing external geometry. Prior to generating the model, the “Operation” option in the “Details view” should be changed to “Cut material.” After clicking “Generate,” DesignModeler should cut out the volume of the missile model from the control volume. This is illustrated in Figure 9. This completes the import of the two parts into CFX.

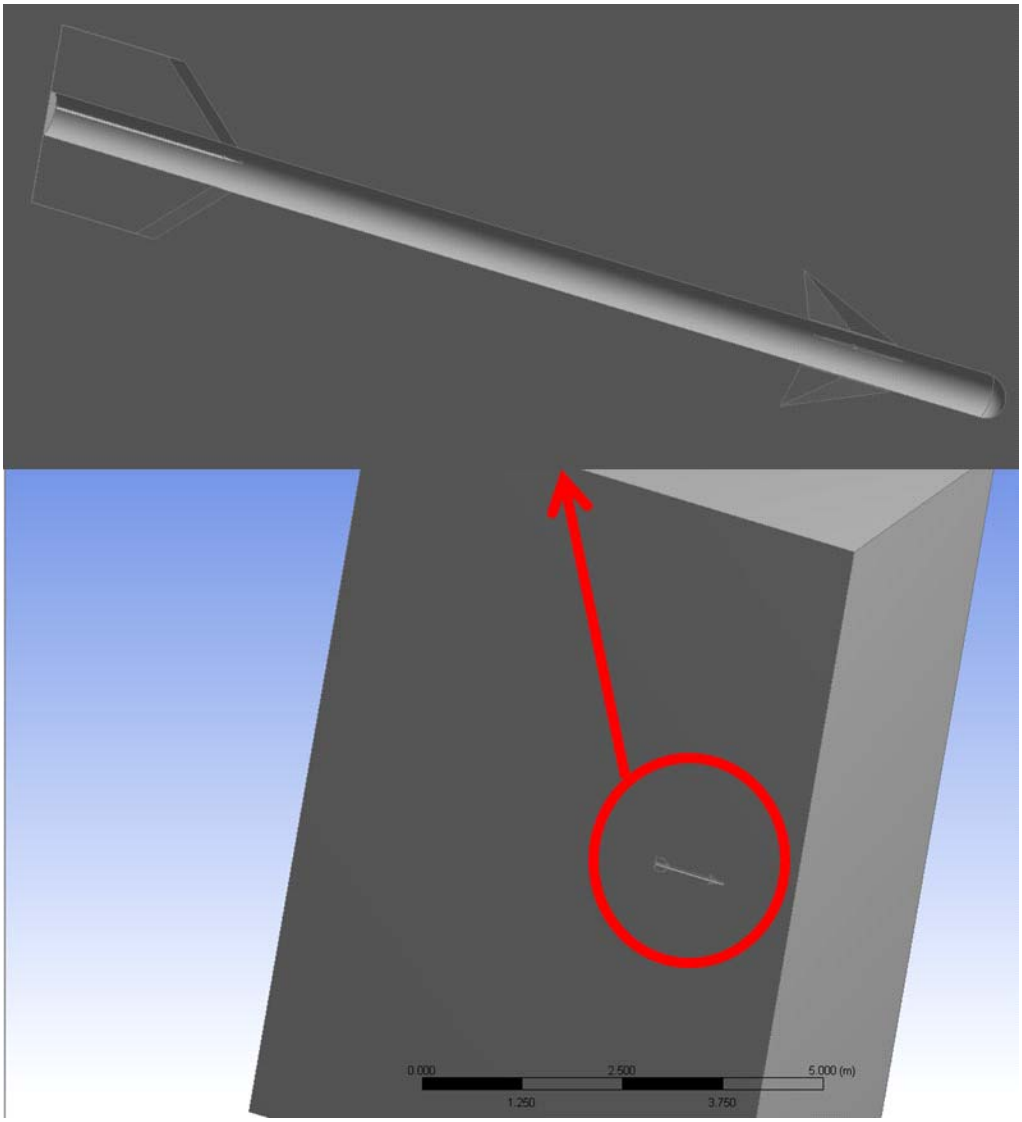

Figure 9. Control volume and missile model cutout.

1. Meshing

Meshing is started by double clicking on the “Mesh” tab in the CFX workspace. In Meshing, the six faces of the control volume have to be individually selected and named. This naming is used later in the Setup to identify the purpose of each of the six faces. Faces or geometries on the missile body can also be selectively named in order to perform additional refinement on these geometries. In this analysis, the canard leading and trailing edges as well as the leading edges on the tail were selected for additional refinement. The refinement setting used is summarized in Table 1.

Geometry	**Refined part**	**Method**	**Number of Divisions**
Canard 1 and 3 (Half body)	Leading and trailing edge	Edge	125
Canard 2 (Full body)	Leading and trailing edge	Edge	400
Tail 1 and 3 (Half body)	Leading edge	Edge	125
Tail 2 (Full body)	Leading edge	Edge	125

Table 1. Refinement settings.

2. Common Mesh Settings

The common mesh settings used for all the test cases are summarized in Table 2.

Defaults	
Physics Preference	CFD
Solver Preference	CFX
Sizing	
Use Advanced Size Function	On: Proximity and Curvature
Relevance Centre	Fine
Initial Size Seed	Active Assembly
Smoothing	Medium
Transition	Slow
Span Angle Centre	Fine
Curvature Normal Angle	10˚
Proximity Accuracy	0.5
Num Cells Across Gap	Default (3)
Min Size	1.e-004 m
Max Face Size	5.e-002 m
Max Size	0.5 m
Growth Rate	Default (1.2)
Minimum Edge Length	4.5361e-005 m

Table 2. Common mesh settings.

3. Inflation Settings

The entire missile body was also selected and named to facilitate the addition of an inflation layer on the entire missile body. The Table 3 summarizes the inflation settings used for the missile model for each case.

Inflation	**Case 1 M=0.2**	**Case 2 M=0.8**	**Case 3 M=1.2**
Inflation Option	Total Thickness	Total Thickness	Total Thickness
Number of Layers	10	20	20
Growth Rate	1.2	1.2	1.2
Maximum Thickness	1.e-003 m	3.e-003 m	3.e-003 m

Table 3. Inflation settings for each test case.

4. Mesh Quality

In general, a good quality mesh can be defined as one that has the proper refinements around the primary areas of interest. The edges and shape of the geometry should also remain well defined and not altered by the mesh in any way. A proper inflation layer growing outward from the body is also necessary to produce better definition of the boundary layer. An all quad mesh is preferred for computational purpose and a sweep of the computational domain with quad elements was attempted but was disallowed by the mesher. Therefore a large number of triangular elements had to be created instead in order to mesh the body and control volume. Figure 10 show the mesh for test case 1.

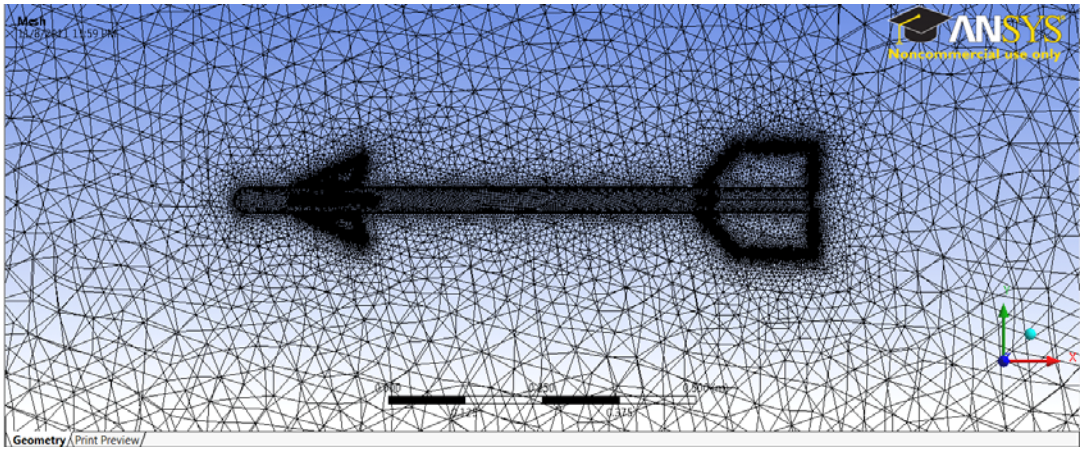

Figure 10. Mesh of missile model and control volume for test case 1.

C. SETUP OF CFX-PRE (SETUP)

1. General Setup

Setup is started by double clicking on the “Setup” tab in the CFX workspace. The method employed to simulate an AOA in the control volume is to have two inlets and two outlets. The inlets will have both a *u* and *v* velocity components which would be the product of the sine and cosine of the AOA and the test case Mach number (Figure 11). For the 0 AOA case, the upper and lower boundaries are openings rather than outlet and inlet, respectively.

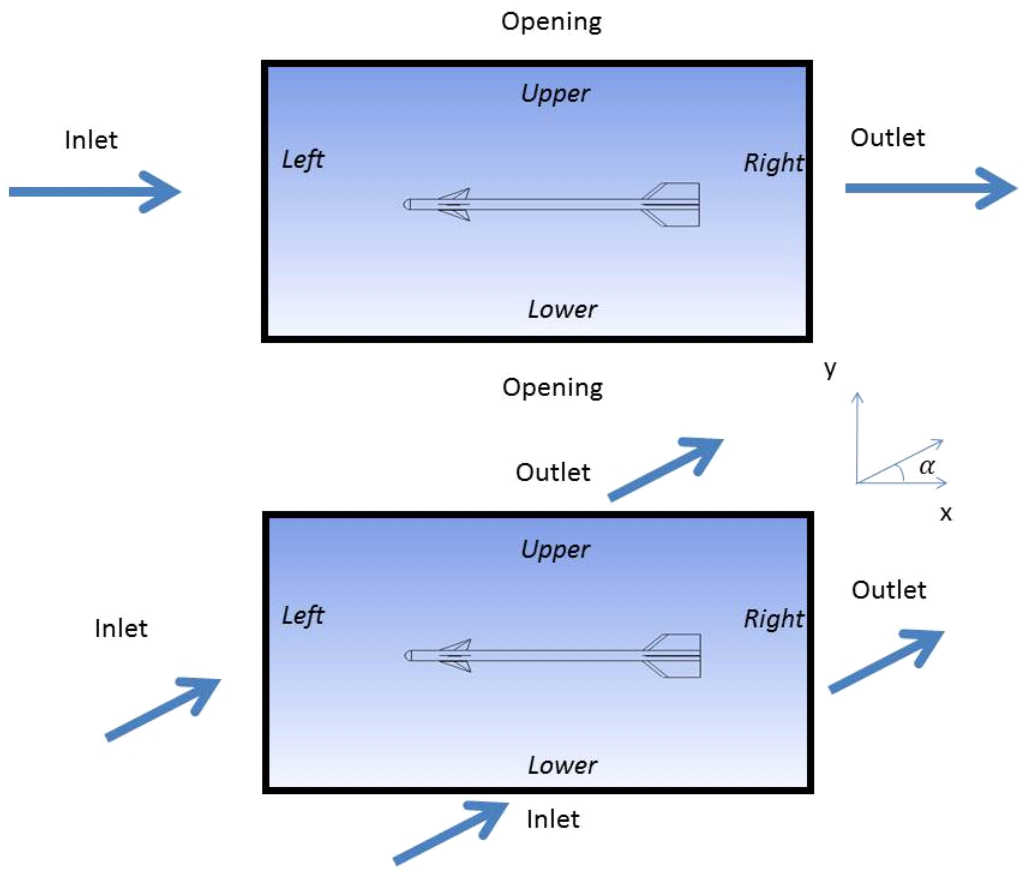

Figure 11. Setup of control volume for AOA.

This method is selected as it allows the reuse of the same mesh for all simulation runs at the same Mach number by just updating the inlet velocity components. An alternate approach is to tilt the entire missile body using DesignModeler to simulate an AOA (Figure 12). This approach however requires that each AOA case have a separate mesh and hence increases the computational time required to run all the test cases. The earlier approach is therefore selected for this analysis.

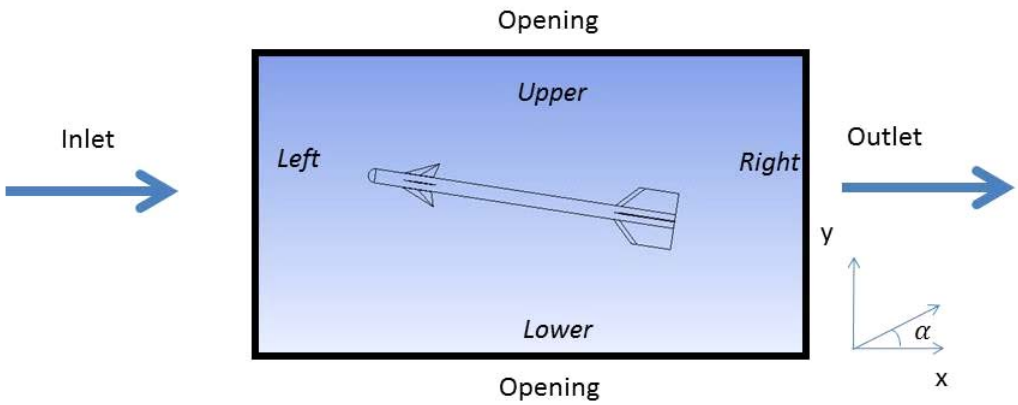

Figure 12. Alternative method for setup control volume for AOA.

2. Assignment of Boundaries

Setup requires the assignment of boundaries to the Named Selections identified in Meshing. These boundaries are defined to be the Inlet, Outlet, Opening, Symmetry and Walls of the control volume. All undefined boundaries are Walls by default. Figure 11 shows the boundaries and their assignments. The front and back faces in the plane of the paper are assigned as Opening and Symmetry, respectively.

3. Parameters Setup

a. Analysis Type and Material Setup

The default Analysis Type specified should be Steady State. This should be checked under “Simulation,” “Analysis Type” then “Analysis Type” entry. Under the “Default Domain” tab, the Material selected should be Air Ideal Gas. The next tab should be marked “Fluid Model.” Under this tab, the heat transfer option selected was “Total Energy” and the Turbulence Model selected was “Shear Stress Transport.” The option for the “High Speed (compressible) Wall Heat Transfer Model” should also be checked.

b. Inlet Setup

After all the boundaries have been added and named, each of the boundaries must be set up for the simulation to run. For inlet boundaries, the "Flow Regime," "Mass and Momentum," "Turbulence" and "Heat Transfer" need to be set. Figure 13 illustrates an example of the input for the Mach 0.2 case at 2 deg AOA.

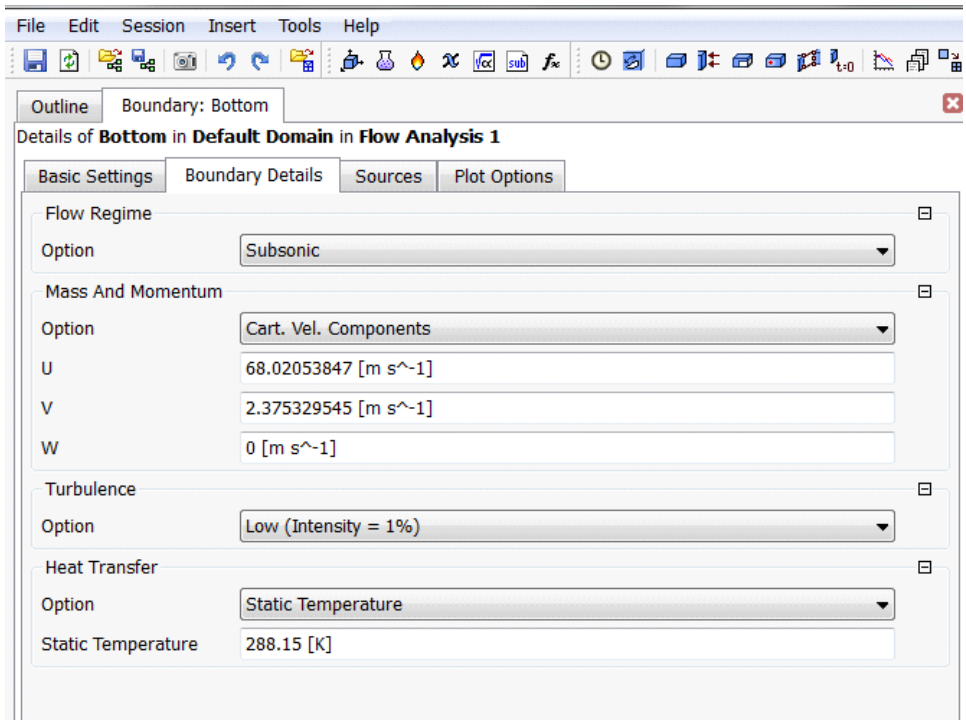

Figure 13. Boundary details for M=0.2 test case at 2 deg AOA.

c. Outlet Setup

Outlets are configured with just "Flow Regime" and "Mass and Momentum" settings. Figure 14 illustrates an example of an Outlet configuration used.

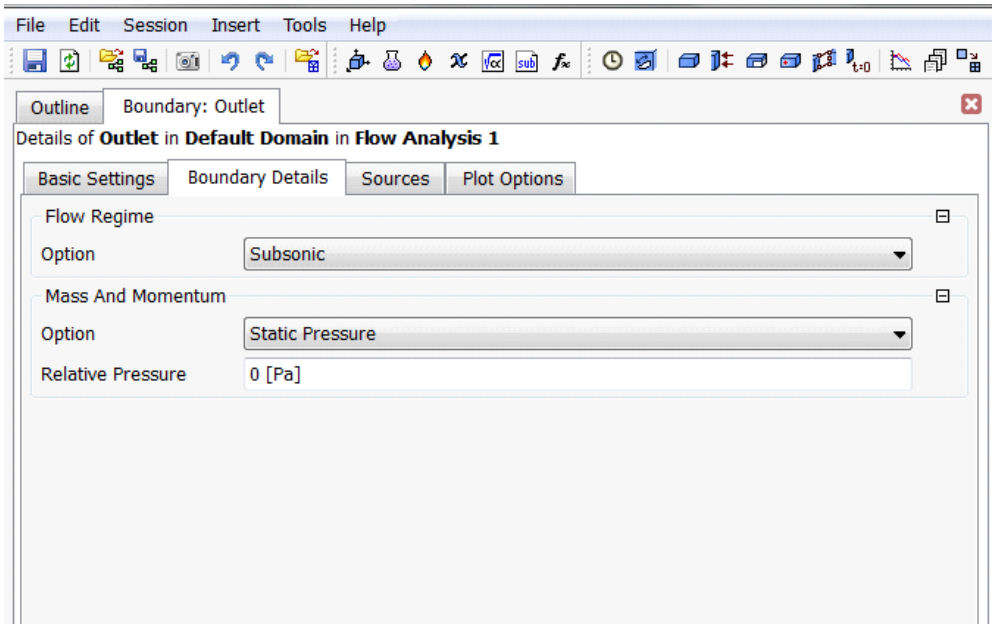

Figure 14. Outlet settings.

d. Opening Setup

Openings differ from inlets and outlets as they allow inflow and outflow across the boundary whereas inlets and outlets only allow flow in one direction. Entrainment was also selected as this was recommended by the program. Zero gradient turbulence option was also a recommendation as a result of using Entrainment in the Mass and Momentum option. Figure 15 illustrates an example of settings used for an Opening.

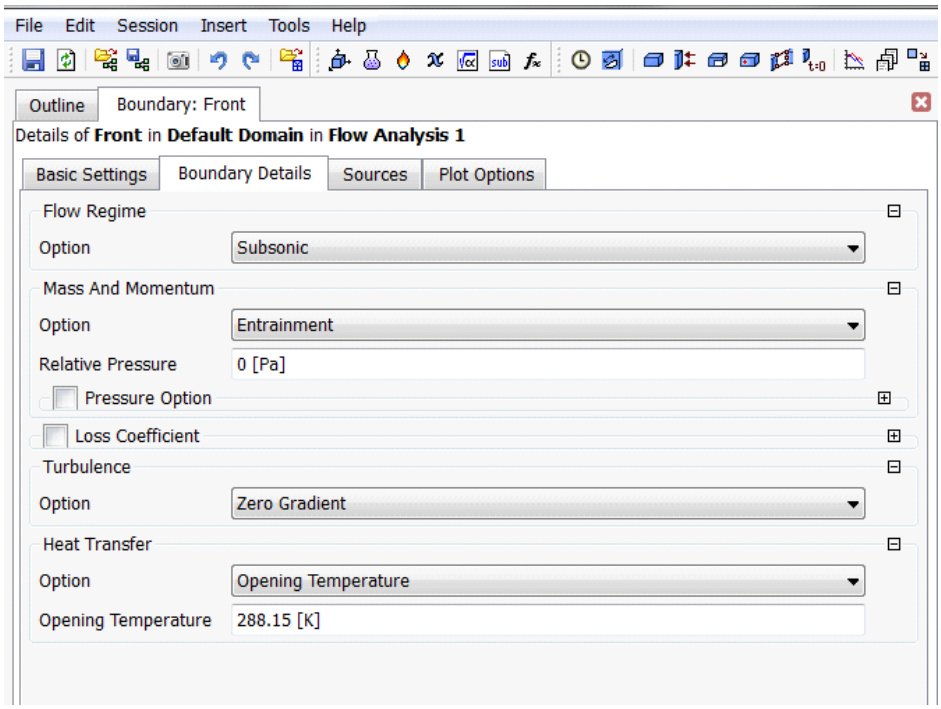

Figure 15. Opening settings.

e. Symmetry Setup

A symmetry boundary was identified and configured in the simulation. This setting requires no additional setup besides identifying the boundary as symmetry.

f. Solver Control Setup

In solver control, the "Max Iterations" was set to 100 and the "Residual Target" option was set to 1 x 10^{-6}. The "Advection" and "Turbulence" options were both set to "High Resolution." Under the "Advanced Options" tab, all options under "Compressibility Controls" are checked.

g. Expert Parameters

"Expert Parameter" option was added to the simulation by selecting "Insert," "Solver" then "Expert Parameter." Under the convergence control tab, the "High Speed Models – max continuity loops" option was checked and assigned a value "3."

D. OBTAINING SOLUTIONS FROM CFX

1. Starting the CFX-Solver Manager

CFX-Solver Manager is started by double clicking on the "Solution" tab in the CFX workspace. The "Define Run" dialog is first displayed. This dialog allows partitioning of the problem as well as adjusting the memory allocation to each of the processing stages of the solver. For this simulation, the default memory settings were used. The "Initialization Option" was set to "Current Solution Data (if possible)."

2. Partitioning the Problem

In order to reduce computational time, the problem can be split up into several parts and solved in parallel. In this simulation, the problem was split up into eight parts to fully utilize the quad-Core processor in the computer used to run ANSYS. The "Run Mode" was selected to "HP MPI Local Parallel" and the number of partitions increased to eight.

3. Display Monitors

The display monitors show the progress of the simulation in terms of the value of the residuals and plots the residuals. The display monitors also show all errors that may result from the simulation as well as the total time taken for the simulation to complete. A screenshot of the display monitors is shown in Figure 16. For certain meshes, the residuals may not converge satisfactorily down to 1×10^{-6}. For these situations, the results may also not be as accurate as expected. As such, the mesh should be refined further and the simulation rerun. This is an iterative process that is very time consuming. In some cases, the residuals start to oscillate and further convergence is not possible. In such situations, the simulation can be stopped prematurely and the result at that iteration can be taken as the final result. A minimum convergence down to 1×10^{-4} is required for reasonable results.

Out File

```
Host computer:  MININT-RP6GCG1 (PID:808)
Par. Process:   Slave  running on mesh partition:       6
Job finished:   Wed Nov 02 23:37:25 2011
Total CPU time: 1.506E+04 seconds
            or: (          0:         4:        10:    59.136 )
                (       Days:     Hours:   Minutes:   Seconds )


Host computer:  MININT-RP6GCG1 (PID:4372)
Par. Process:   Slave  running on mesh partition:       7
Job finished:   Wed Nov 02 23:37:25 2011
Total CPU time: 1.416E+04 seconds
            or: (          0:         3:        55:    57.465 )
                (       Days:     Hours:   Minutes:   Seconds )


Host computer:  MININT-RP6GCG1 (PID:4504)
Par. Process:   Slave  running on mesh partition:       8
Job finished:   Wed Nov 02 23:37:25 2011
Total CPU time: 1.452E+04 seconds
            or: (          0:         4:         2:     1.743 )
                (       Days:     Hours:   Minutes:   Seconds )

Total wall clock time: 1.750E+04 seconds
            or: (          0:         4:        51:    42.000 )
                (       Days:     Hours:   Minutes:   Seconds )


 --> Master-Partition Nr.    1 reaches final synchronization point!
 --> Slave-Partition  Nr.    2 reaches final synchronization point!
 --> Slave-Partition  Nr.    3 reaches final synchronization point!
 --> Slave-Partition  Nr.    4 reaches final synchronization point!
 --> Slave-Partition  Nr.    5 reaches final synchronization point!
 --> Slave-Partition  Nr.    6 reaches final synchronization point!
 --> Slave-Partition  Nr.    7 reaches final synchronization point!
 --> Slave-Partition  Nr.    8 reaches final synchronization point!
End of solution stage.

 +-------------------------------------------------------------------+
 | The results from this run of the ANSYS CFX Solver have been       |
 | written to                                                        |
 | C:/Users/Mooz/AppData/Local/Temp/centreofmoment_4916_Working/dp0/- |
 | CFX-3/CFX/Work1/0 deg 5x ctrlvol_001.res                          |
 +-------------------------------------------------------------------+


This run of the ANSYS CFX Solver has finished.
```

Figure 16. Display monitors.

4. Displaying Simulation Results

a. Flow Field Display

CFX-Post is started by double clicking on the “Results” tab in the CFX workspace. In CFX-Post, the flow field around the missile model can be visualized and forces acting on the missile model can be calculated. In order to visualize the flow fields, a “slice” of the domain was created by the addition of planes in the XY and YZ directions. Figure 17 shows an example of the Mach number over the canard of the missile. The shocks off the nose and canard are clearly visible here.

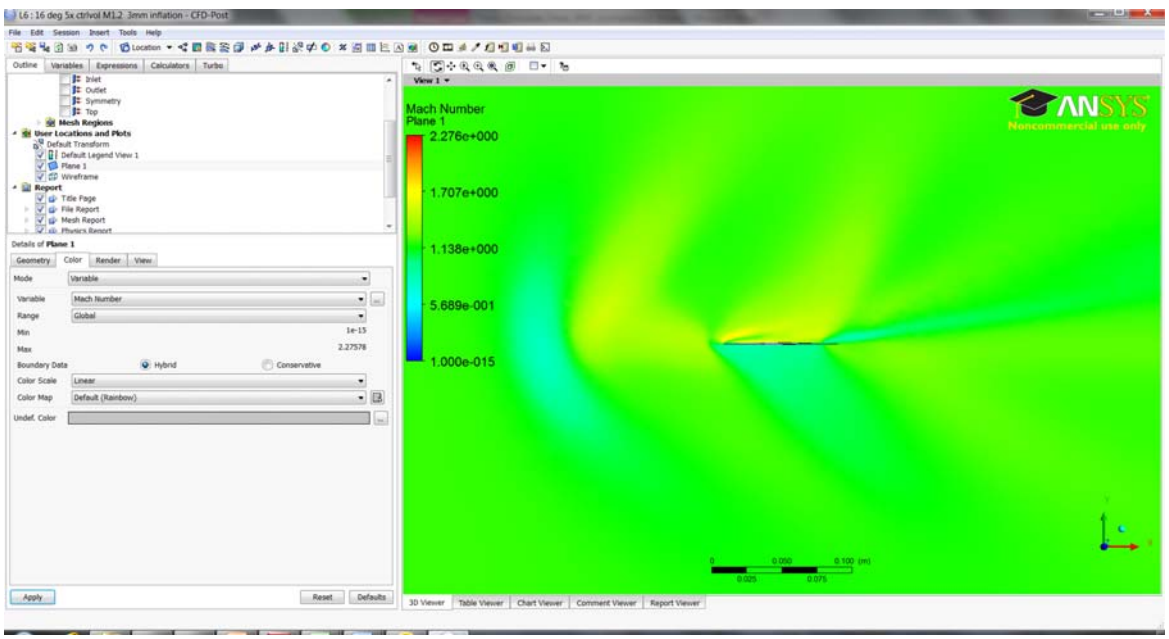

Figure 17. Mach number distribution over the canard.

The visualization of the vortices produced by the canard can also be shown in the YZ plane as shown in Figure 18.

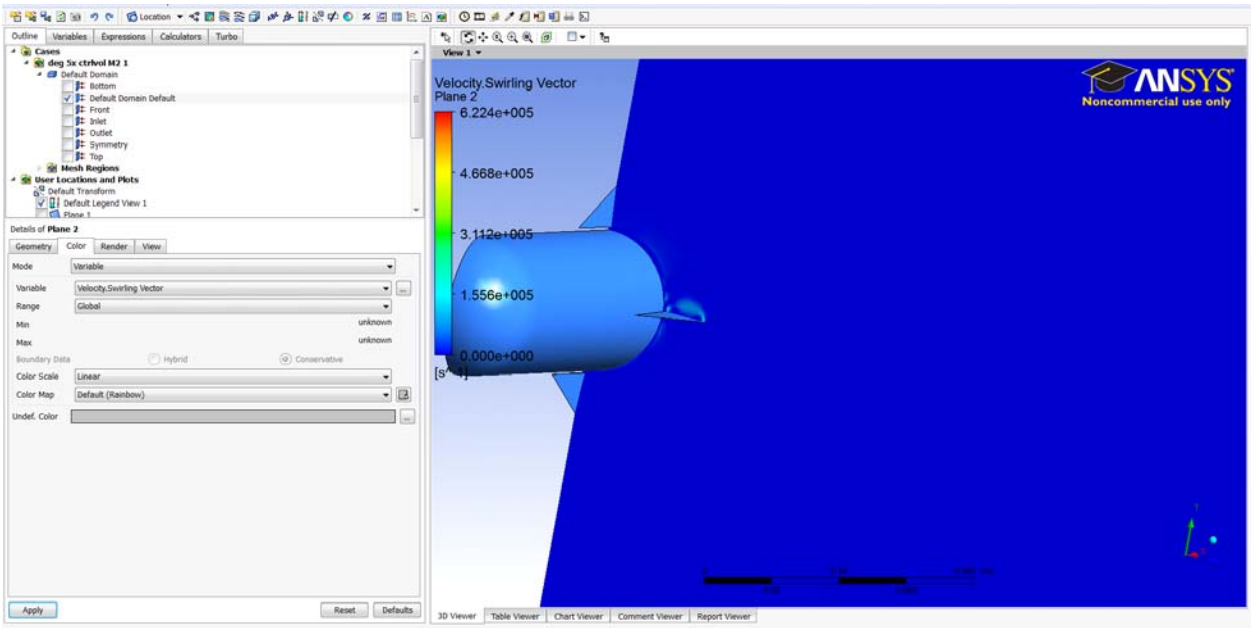

Figure 18. Vortex at canard leading edge.

b. Function Calculator

The forces on the missile body can be calculated using the "Calculator" tab. The "Function Calculator" is used to calculate F_Y, F_X and $Torque_Z$. The origin was placed at the Moment Reference on the missile body to facilitate the determination of Moment about the Moment Reference. In this method of simulation selected, F_Y and F_X correspond to the Normal force and Axial force and $Torque_Z$ corresponds to the Moment about the Moment Reference. The average value of Yplus can also be calculated. A screenshot of the Function Calculator is presented as Figure 19.

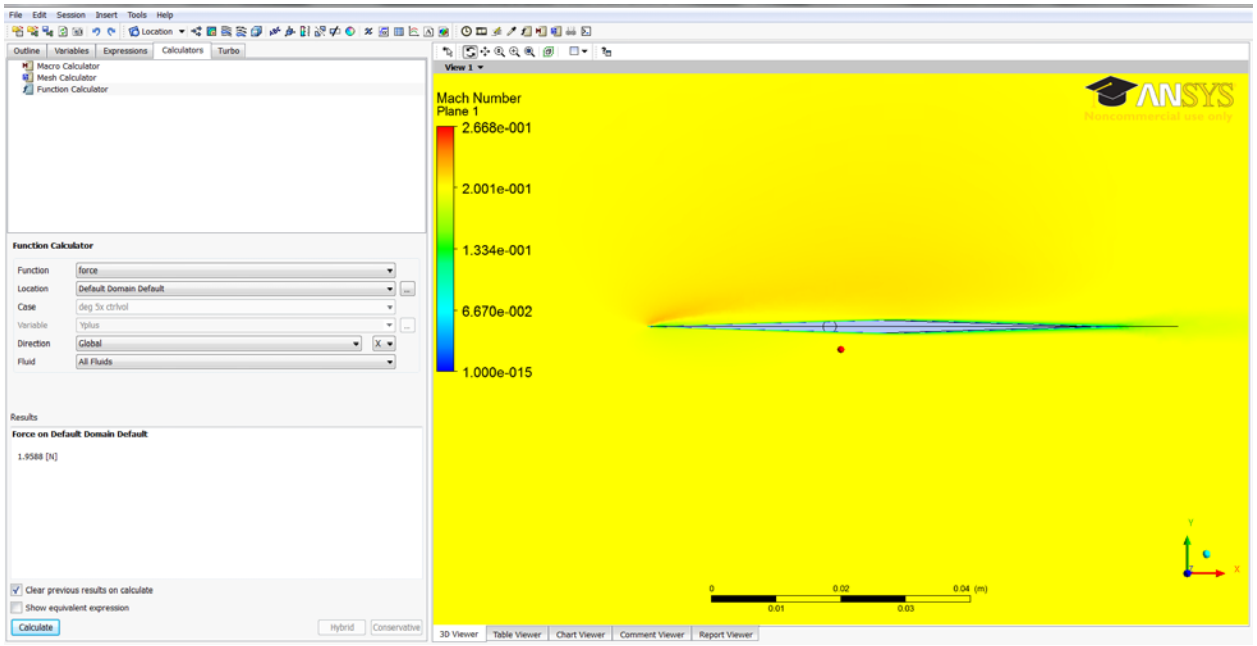

Figure 19. Function Calculator.

III. RESULTS

A. COMPARISON OF EXPERIMENTAL CFX AND AP09 RESULTS.

1. Test case 1: Mach 0.2

a. Mesher Inflation Settings

Figure 20 shows the inflation settings used for this test case.

Details of "Mesh"	
Defaults	
Physics Preference	CFD
Solver Preference	CFX
Relevance	0
Sizing	
Inflation	
Use Automatic In...	All Faces in Chosen Named Selection
Named Selection	Missile
Inflation Option	Total Thickness
Number of Lay...	10
Growth Rate	1.2
Maximum Thic...	1.e-003 m
Inflation Algorithm	Pre
View Advanced ...	No
Advanced	
Defeaturing	
Statistics	
Nodes	1293968
Elements	5735422
Mesh Metric	None

Figure 20. Inflation settings for Mach 0.2 test case.

Along with the common settings presented in the previous section, the Mesh contained 1293968 nodes and 5735422 elements.

b. Solver Run Times

The computer used to run ANSYS-CFX utilized a Quad core Intel® Core™ i7-2630M processor running at 2.0 GHz with 8GB of RAM. The computer ran

the 64 bit version of ANSYS-CFX. Utilizing parallel processing by splitting the problem in eight parts, the solution time of each run was approximately five hours.

c. Yplus Targets

The Yplus is a non-dimensional wall distance for wall bounded flow that is defined by,

$$y^{+} = \frac{u_{*} \times y}{v}$$

where u_{*} is friction velocity, y is the distance to the nearest wall and v is the local kinematic viscosity of the fluid. This non-dimensional value is a measure of the quality of the mesh in the boundary layer around the test object.

The target of the simulations was to get the Yplus below 10 versus trying to optimize the mesh to reduce Yplus values to near unity. This tradeoff was considered due to the long computational times required and the large number of data points that needed to be collected. The values of Yplus achieved for this test case was between 6.09–7.07.

d. Graphs of Experimental against ANSYS-CFX Data

Figures 21 to 24 present the graphs of experimental versus ANSYS-CFX data for this test case. The experimental results are represented by the solid diamond and the results of ANSYS-CFX results are represented by the hollow square. The numerical data points are presented in Appendix C.

The results show good agreement for C_M, C_N, and C_L. However, ANSYS-CFX over predicts the values for C_A. The error in C_A ranges from 8.08% to 15.68% for AOA of 0 and 16 deg, respectively. This was expected as turbulence models used in ANSYS-CFX still cannot fully describe turbulent behavior and hence its effects on drag.

ANSYS-CFX also correctly determined the non-linear relationship between C_L and Alpha at small AOA as opposed to the linear relationship obtained using approximate methods.

It is also noted that in this method of running the simulation in ANSYS-CFX, ANSYS-CFX return only the values of F_N, F_A and Pitching Moment directly from CFD-Post. Values for F_L are calculated by the relationship,

$$F_L = F_N \cos\theta - F_A \sin\theta$$

where θ is the AOA.

Hence, the error in F_A is propagated into the calculation for F_L. However, for small AOA, the contribution from the second term in the equation is small. This explains why the values for C_L calculated still agrees with that obtained experimentally.

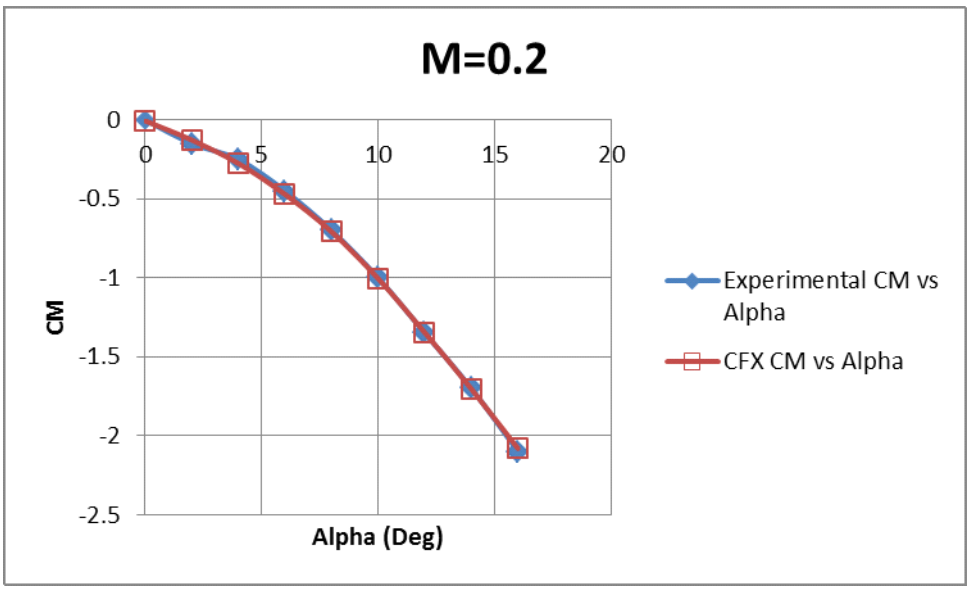

Figure 21. Graph of C_M versus Alpha for ANSYS-CFX M=0.2.

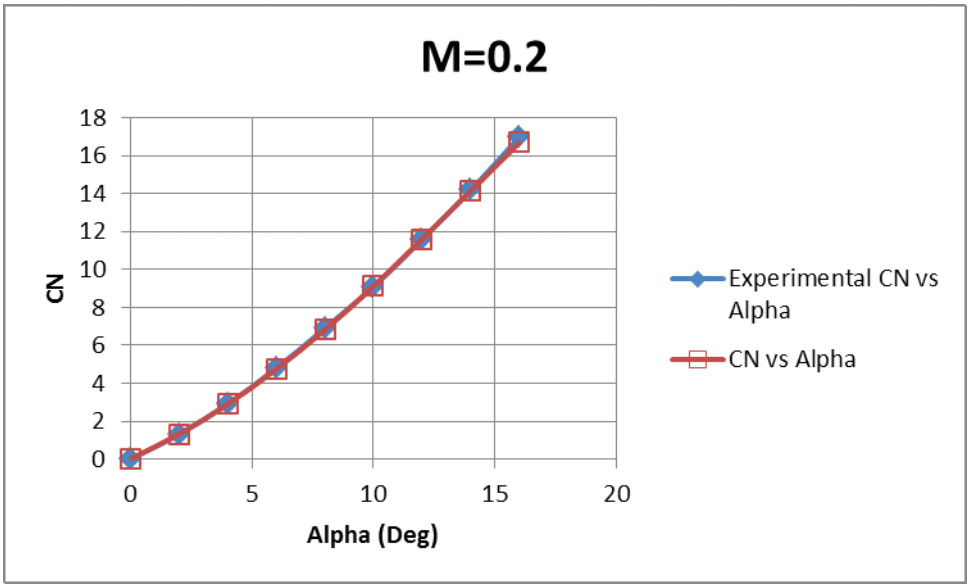

Figure 22. Graph of C_N versus Alpha for ANSYS-CFX M=0.2.

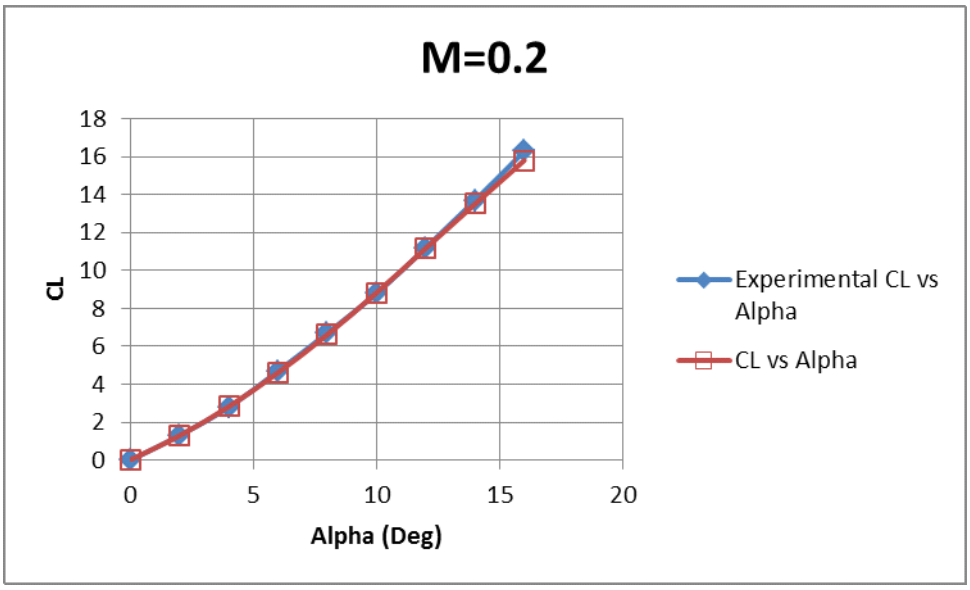

Figure 23. Graph of C_L versus Alpha for ANSYS-CFX M=0.2.

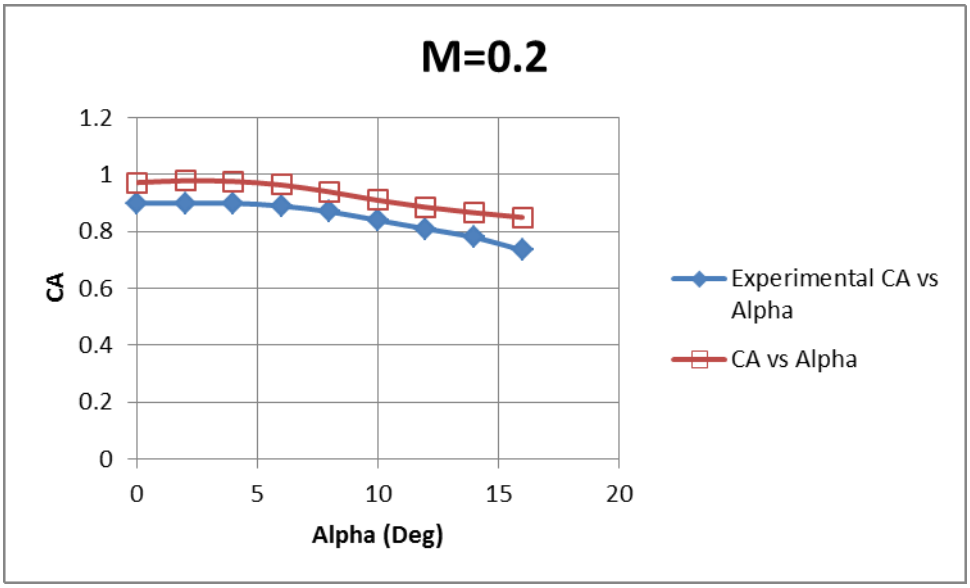

Figure 24. Graph of C_A vs. Alpha for ANSYS-CFX M=0.2.

e. Graphs of Experimental against AP09 Data

Figures 25 to 28 present the graphs of experimental versus AP09 data for this test case. The experimental results are represented by the solid diamond and the results of AP09 results are represented by the hollow square. The numerical data points are presented in Appendix D. The method of input and settings are presented in Appendix B.

AP09 also shows good agreement for C_M, C_N, and C_L. However, AP09 underpredicts the values for C_A. The error in C_A was approximately 20%. This could be attributed to the lack of details like missile hangers and tail fin clamps that are omitted from the AP09 model that are present on the actual wind tunnel model. AP09 has no means of entering these details into the model.

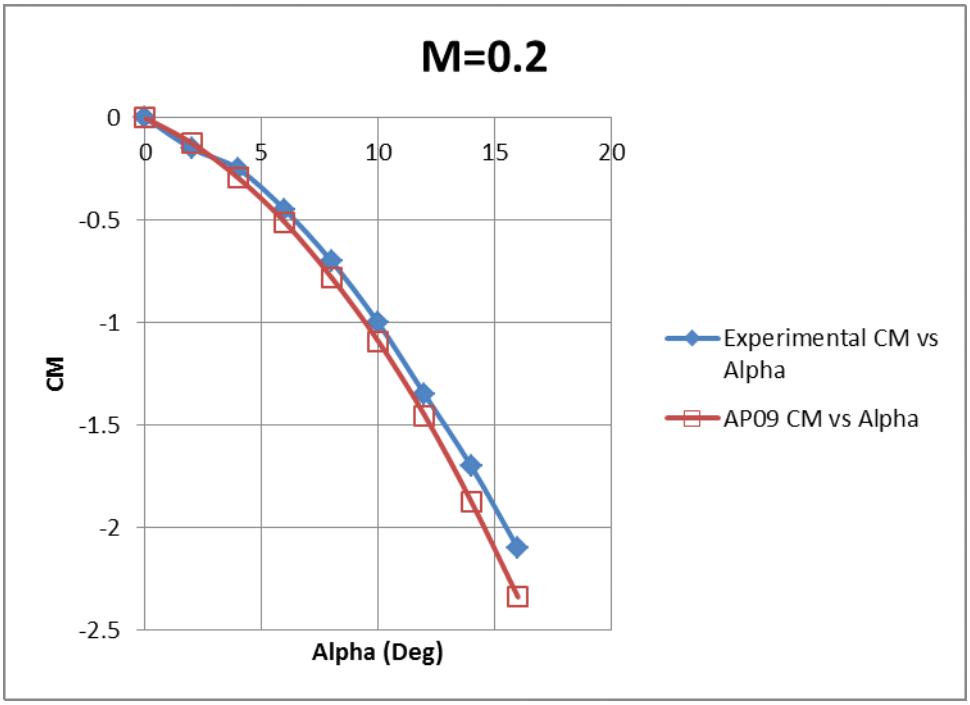

Figure 25. Graph of C_M versus Alpha for AP09 M=0.2.

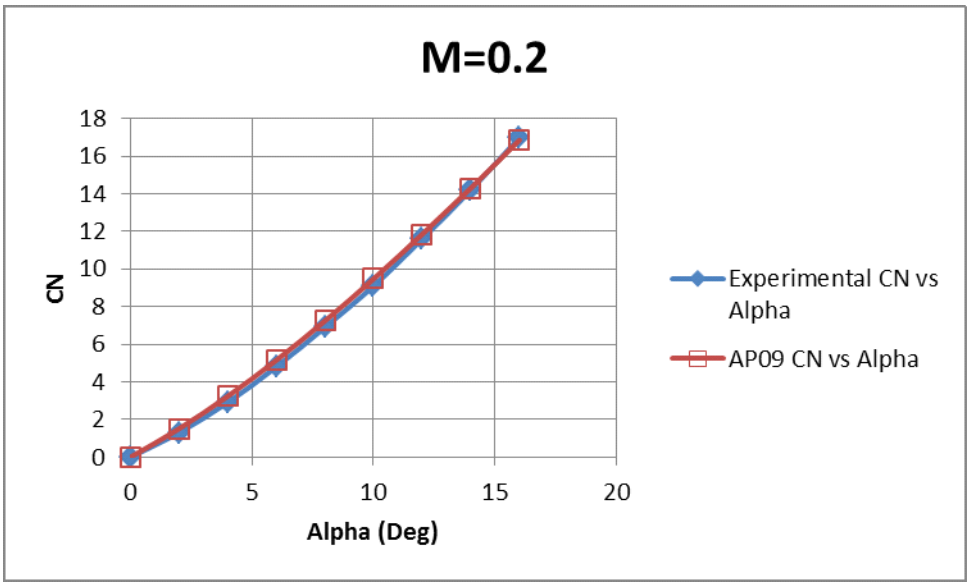

Figure 26. Graph of C_N versus Alpha for AP09 M=0.2.

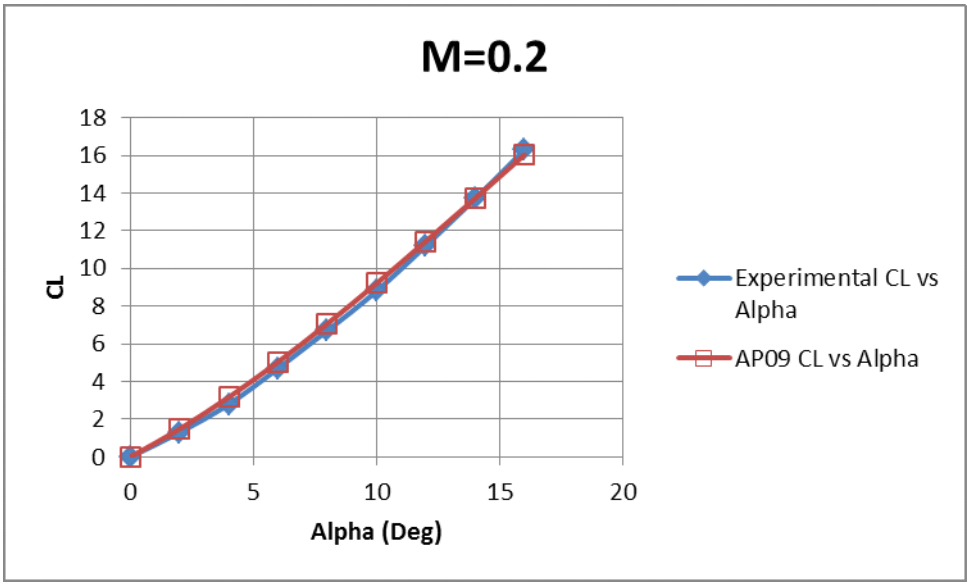

Figure 27. Graph of C_L versus Alpha for AP09 M=0.2.

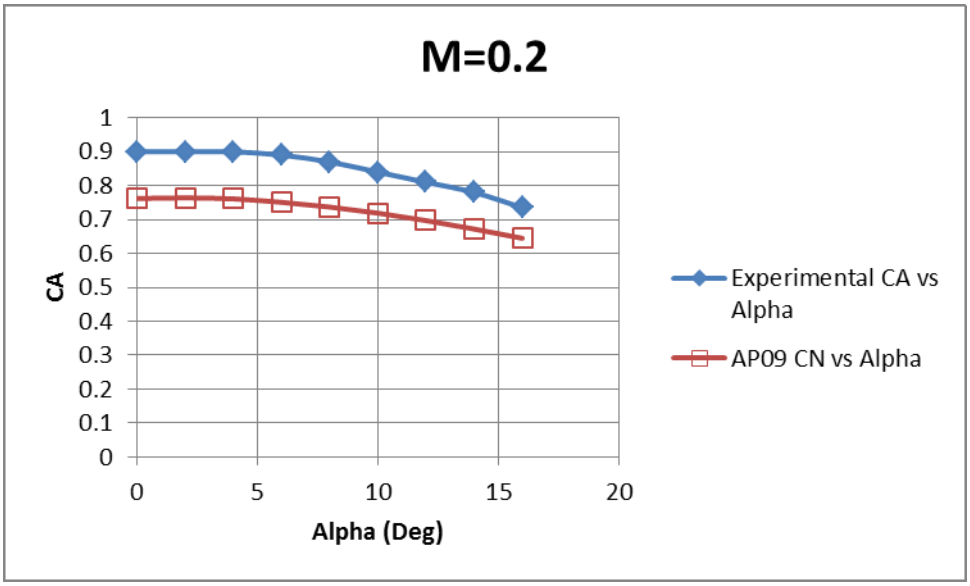

Figure 28. Graph of C_A versus Alpha for AP09 M=0.2.

2. Test Case 2: Mach 0.8

a. Mesher Inflation Settings

The Figure 29 shows the inflation settings used for this test case.

Details of "Mesh"	
Defaults	
Physics Preference	CFD
Solver Preference	CFX
Relevance	0
Sizing	
Inflation	
Use Automatic In...	All Faces in Chosen Named Selection
Named Selection	Missile
Inflation Option	Total Thickness
Number of Lay...	20
Growth Rate	1.2
Maximum Thic...	3.e-003 m
Inflation Algorithm	Pre
View Advanced ...	No
Advanced	
Defeaturing	
Statistics	
Nodes	1524217
Elements	6136338
Mesh Metric	None

Figure 29. Inflation settings for Mach 0.8 test case.

Along with the common settings presented in the previous section, the Mesh contained 1524217 nodes and 6136338 elements.

b. Solver Run Times

For this test case, the residual started to oscillate above 1 x 10^{-5}. As such, 1 x 10^{-5} was chosen as the convergence criterion. The number of iterations required was therefore reduced and average solver run time was two hours.

c. Yplus Targets

The values of Yplus achieved for this test case was between 8.22–9.22.

d. Graphs of Experimental against ANSYS-CFX Data

Figures 30 to 33 present the graphs of experimental versus ANSYS-CFX data for this test case. The experimental results are represented by the solid diamond and the results of ANSYS-CFX results are represented by the hollow square. The numerical data points are presented in Appendix C.

The results still show good agreement at this transonic speed which was unexpected.

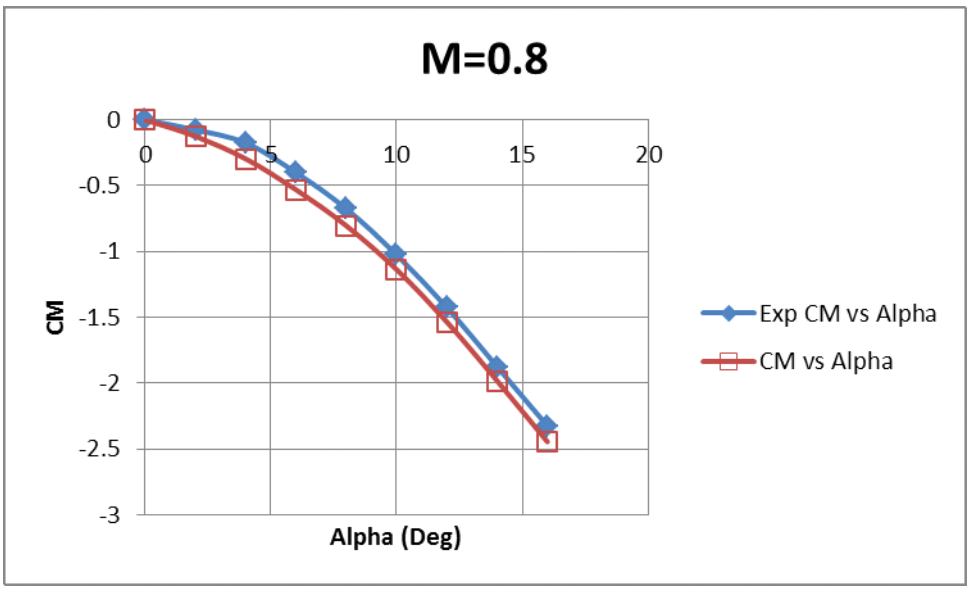

Figure 30. Graph of C_M versus Alpha for ANSYS-CFX M=0.8.

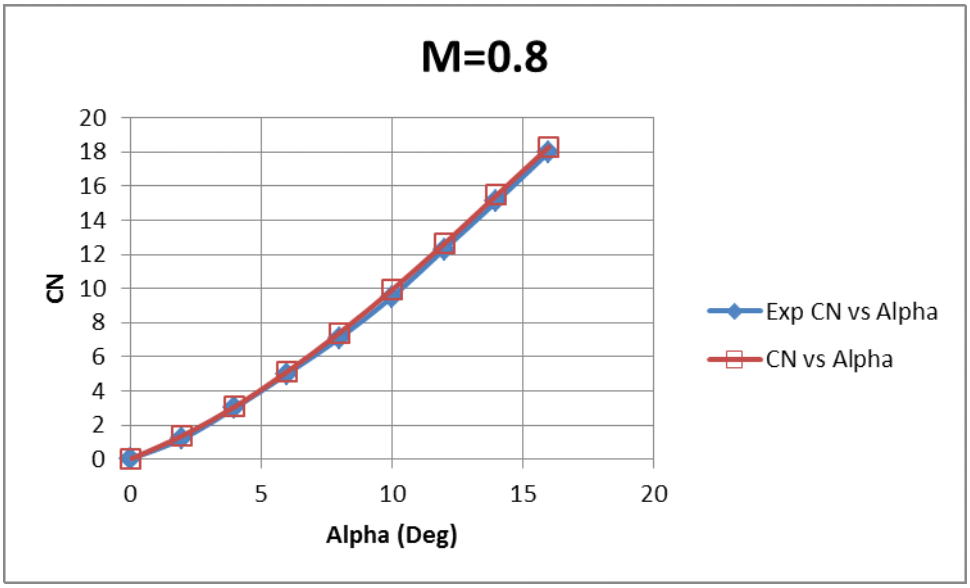

Figure 31. Graph of C_N versus Alpha for ANSYS-CFX M=0.8.

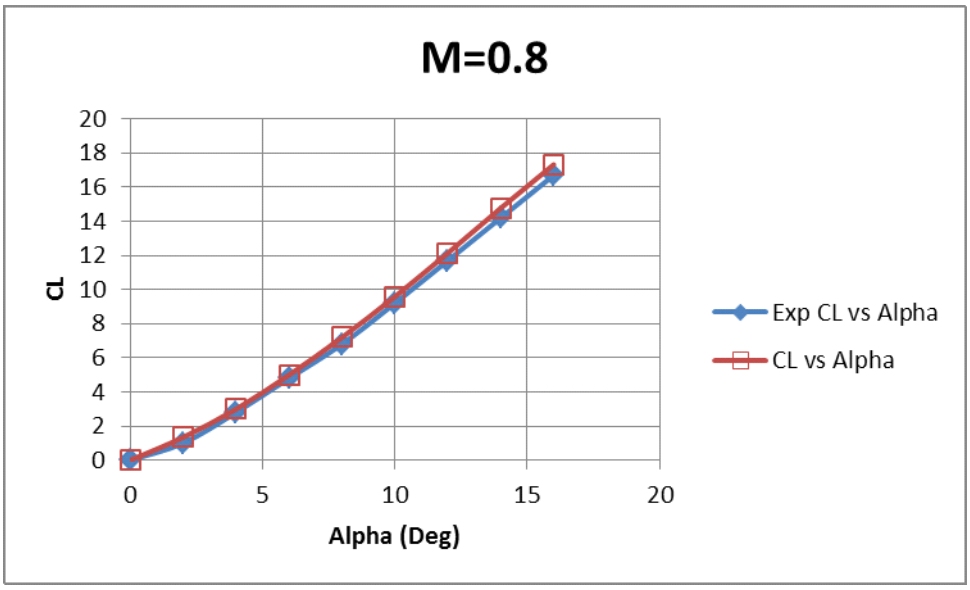

Figure 32. Graph of C_L versus Alpha for ANSYS-CFX M=0.8.

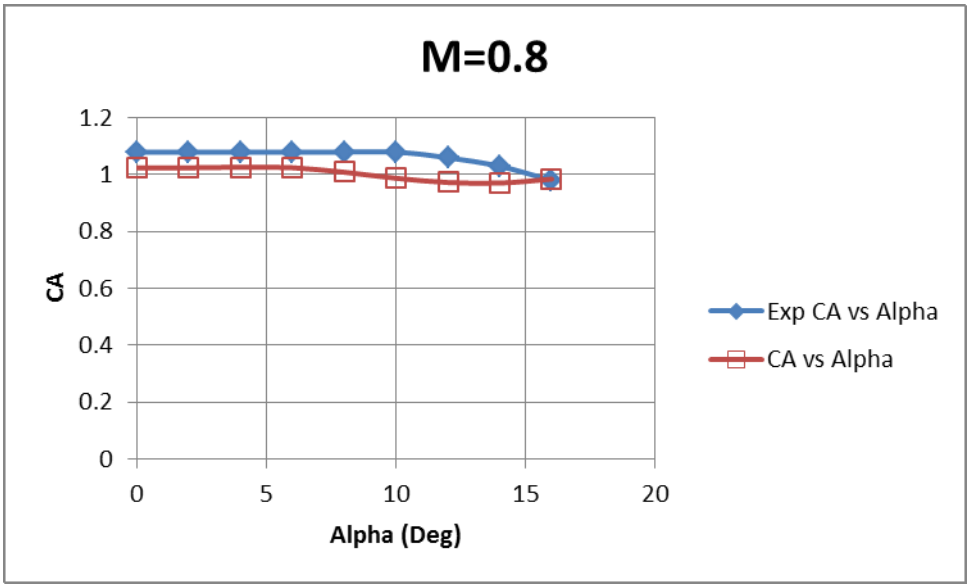

Figure 33. Graph of C_A versus Alpha for ANSYS-CFX M=0.8.

e. Graphs of Experimental against AP09 Data

AP09 also shows good agreement at this Mach number with the exception again of C_A. This again was an underprediction, but was consistent with the previous test case at Mach 0.2. The numerical data points are presented in Appendix D.

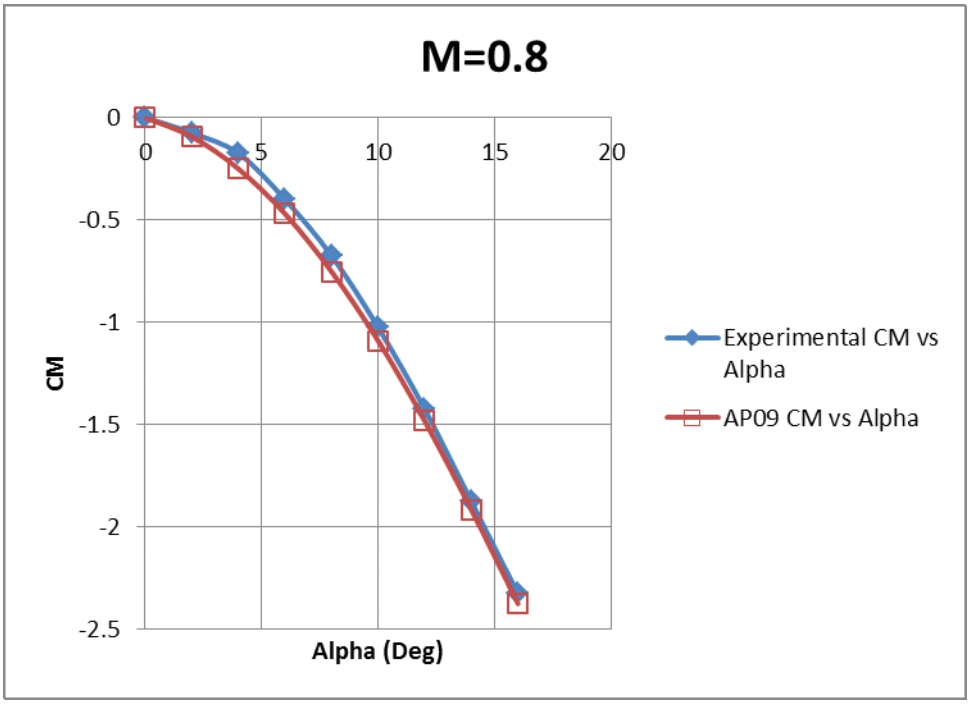

Figure 34. Graph of C_M versus Alpha for AP09 M=0.8.

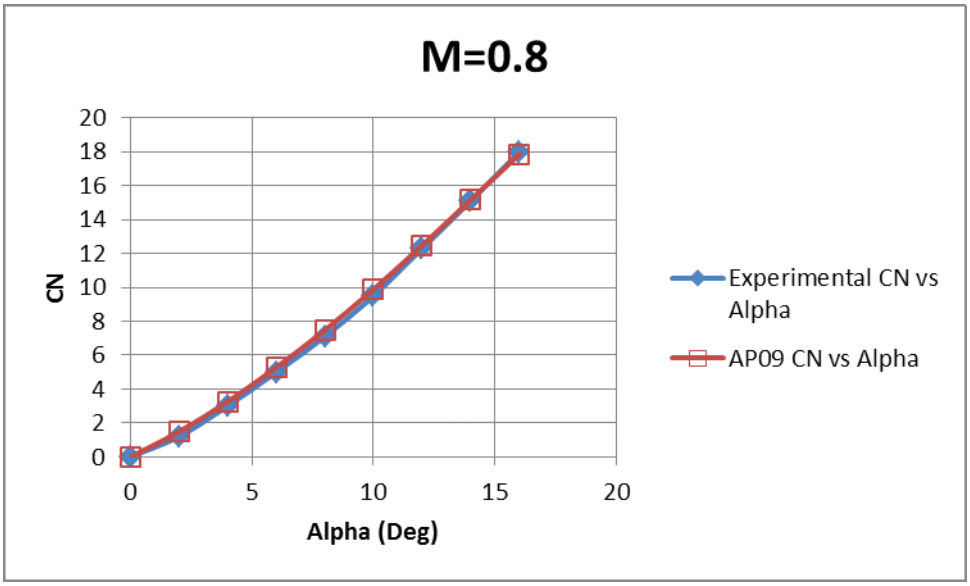

Figure 35. Graph of C_N versus Alpha for AP09 M=0.8.

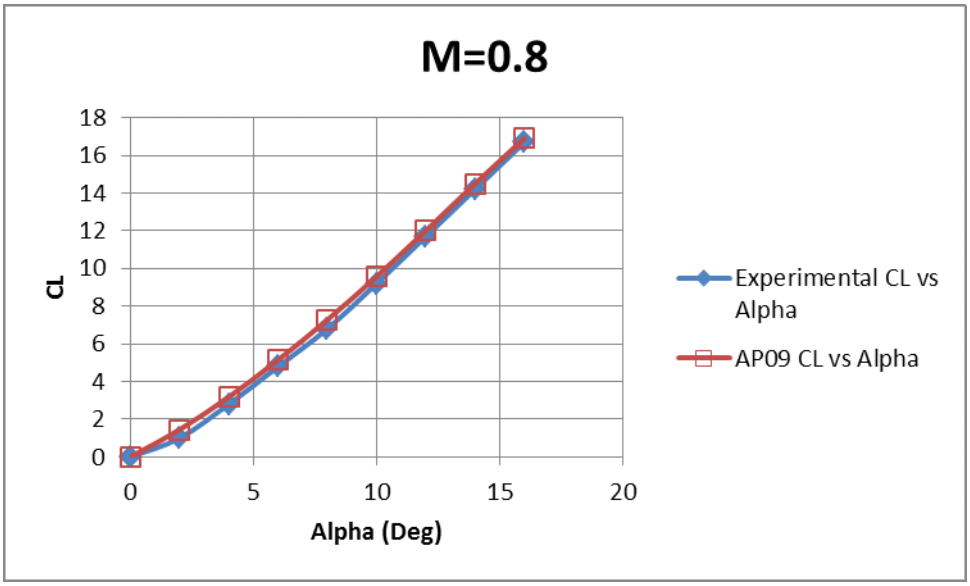

Figure 36. Graph of C_L versus Alpha for AP09 M=0.8.

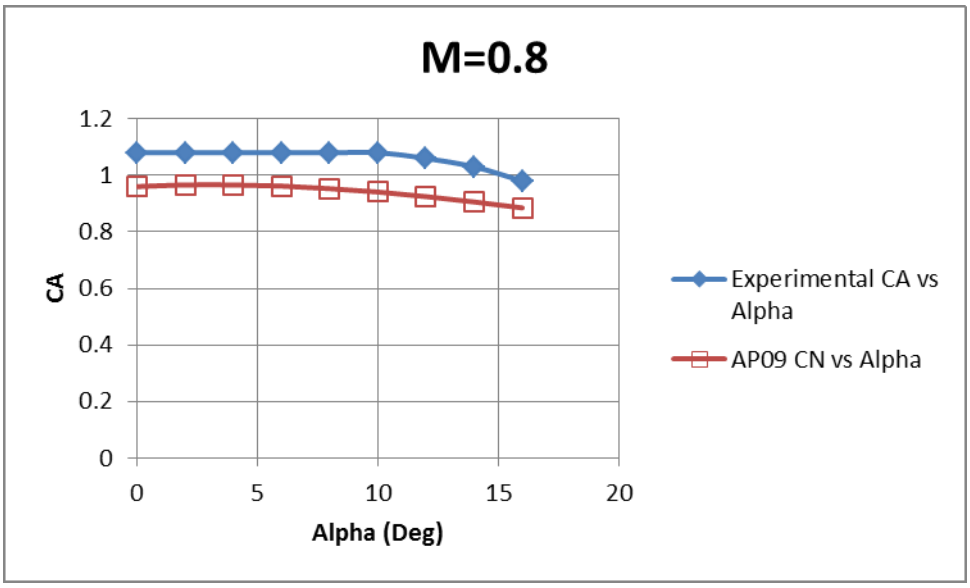

Figure 37. Graph of C_A versus Alpha for AP09 M=0.8.

3. Test Case 3: Mach 1.2

a. Mesher Inflation Settings

Figure 38 shows the inflation settings used for this test case.

Details of "Mesh"	
Defaults	
Physics Preference	CFD
Solver Preference	CFX
Relevance	0
Sizing	
Inflation	
Use Automatic In...	All Faces in Chosen Named Selection
Named Selection	Missile
Inflation Option	Total Thickness
Number of Lay...	20
Growth Rate	1.2
Maximum Thic...	3.e-003 m
Inflation Algorithm	Pre
View Advanced ...	No
Advanced	
Defeaturing	
Statistics	
Nodes	1524217
Elements	6136338
Mesh Metric	None

Figure 38. Inflation settings for test case 3.

Along with the common settings presented in the previous section, the Mesh contained 1524217 nodes and 6136338 elements.

b. Solver Run Times

For this test case, the residual also started to oscillate above 1 x 10^{-5}. The number of iterations was reduced to and the run was stopped just before the oscillations began. On average, 37 iterations were required for each run requiring approximately 90 minutes.

c. Yplus Targets

For this supersonic test case, Yplus does not play such a big role as in the subsonic and transonic test cases. As such, the meshing settings for this test case were the same as the Test case 2 and the Yplus values were not refined to values below 10. Y plus values achieved in these runs were between 12.07 and 12.27.

d. Graphs of Experimental against ANSYS-CFX Data

Figures 39 to 42 present the graphs of experimental versus ANSYS-CFX data for this test case. The experimental results are represented by the solid diamond and the results of ANSYS-CFX results are represented by the hollow square. The numerical data points are presented in Appendix C.

This data also shows good agreement at this Mach number. The errors for CA are also much smaller, which seems to agree with the physics that the pressure drag dominates over the skin drag at supersonic speeds. ANSYS-CFX does well in simulating pressure distributions around the body and hence predicts the pressure drag and lift accurately.

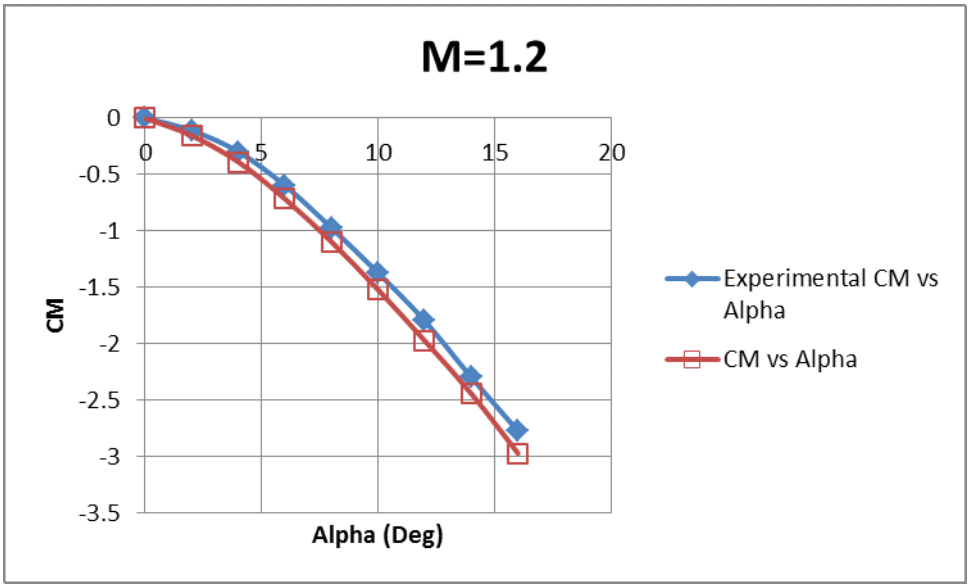

Figure 39. Graph of C_M versus Alpha for ANSYS-CFX M=1.2.

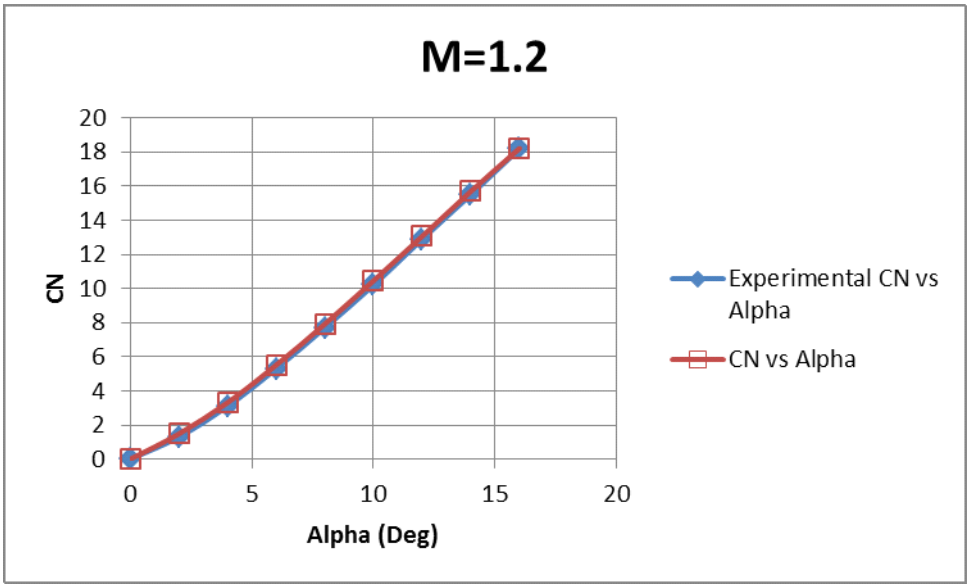

Figure 40. Graph of C_N versus Alpha for ANSYS-CFX M=1.2.

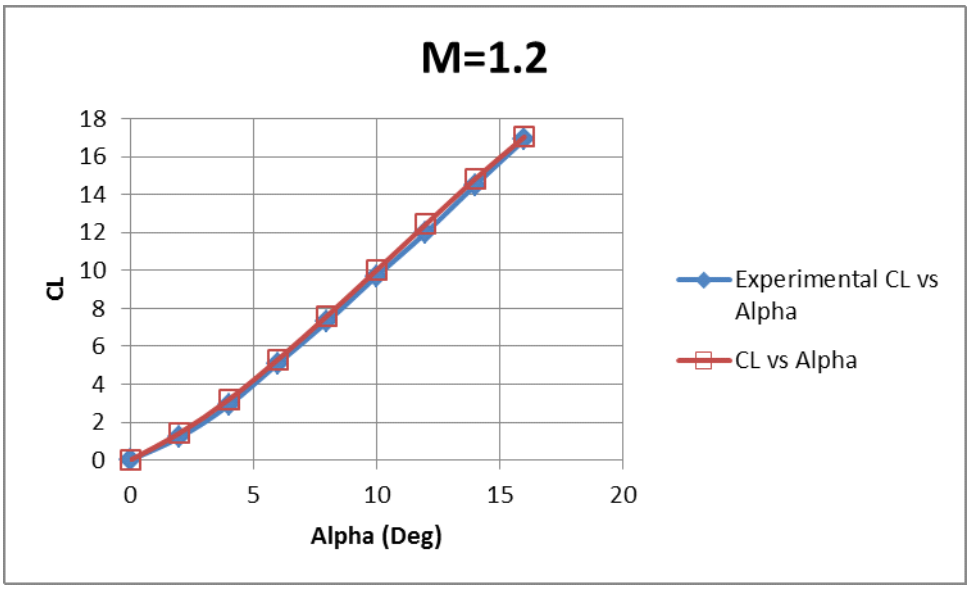

Figure 41. Graph of C_L versus Alpha for ANSYS-CFX M=1.2.

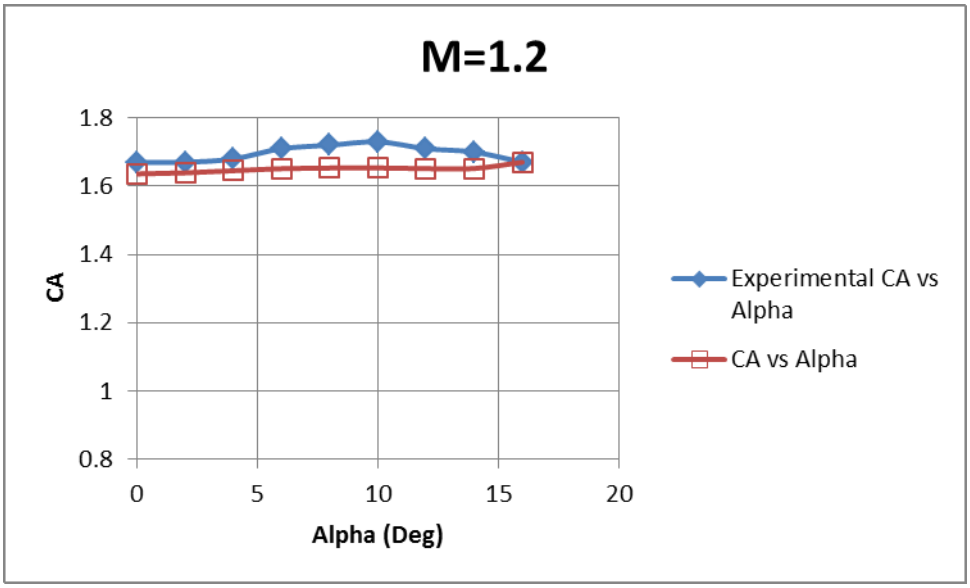

Figure 42. Graph of C_A versus Alpha for ANSYS-CFX M=1.2.

e. Graphs of Experimental against AP09 Data

AP09 results also agree in general with the experimental results at this Mach number. The numerical data points are presented in Appendix D.

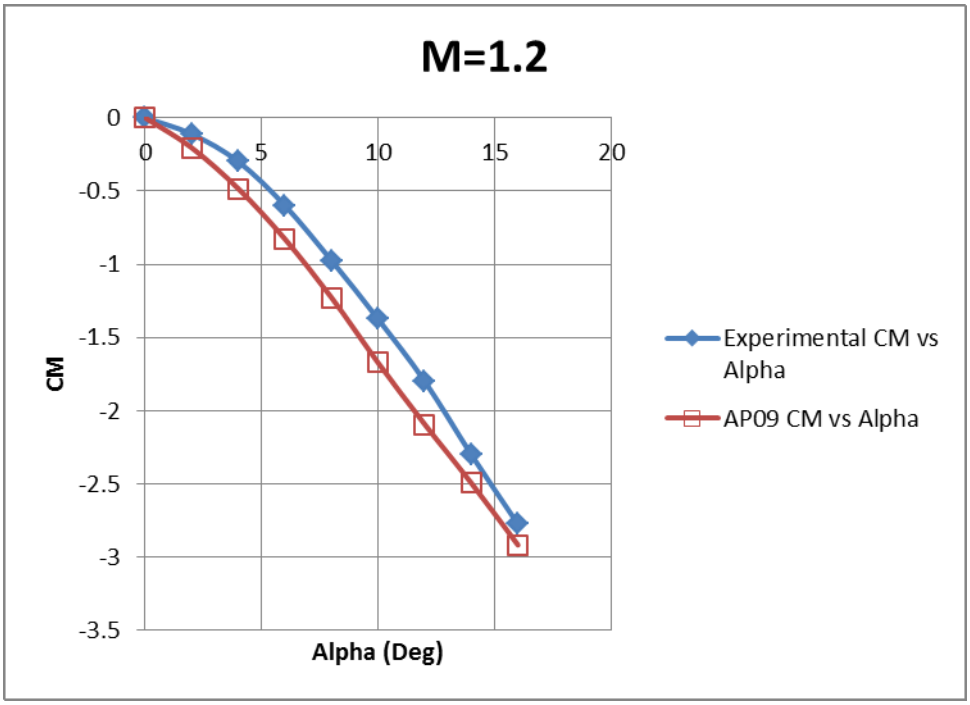

Figure 43. Graph of C_M versus Alpha for AP09 M=1.2.

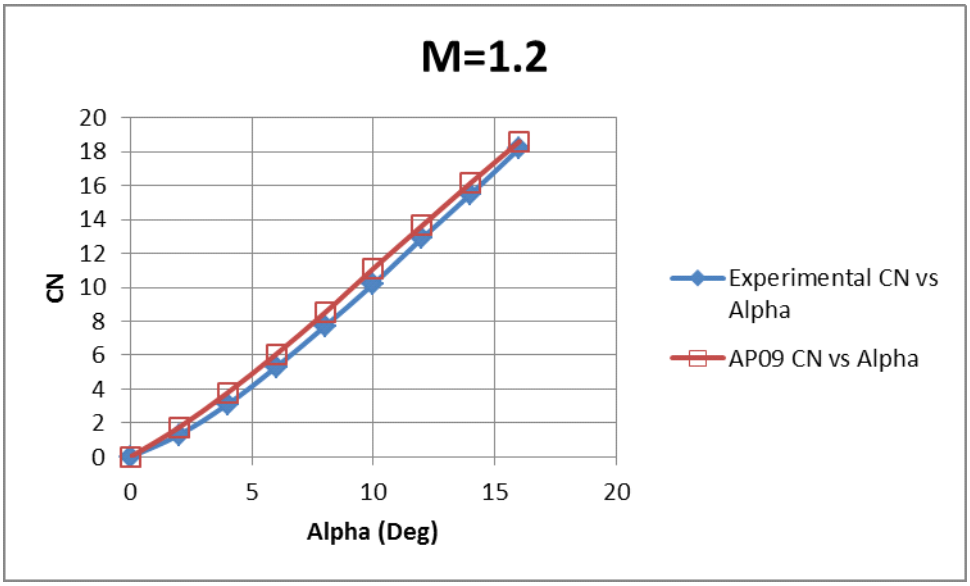

Figure 44. Graph of C_N versus Alpha for AP09 M=1.2.

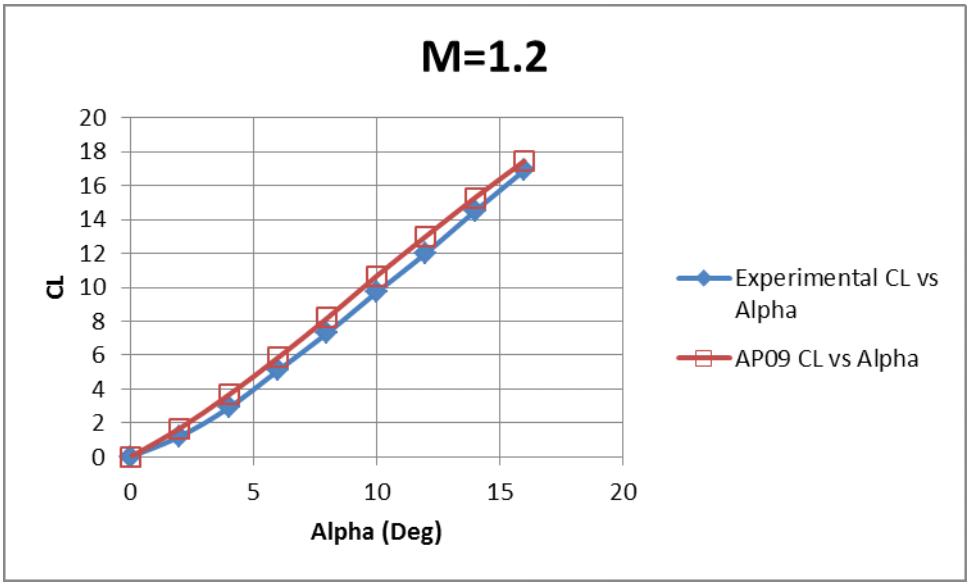

Figure 45. Graph of C_L versus Alpha for AP09 M=1.2.

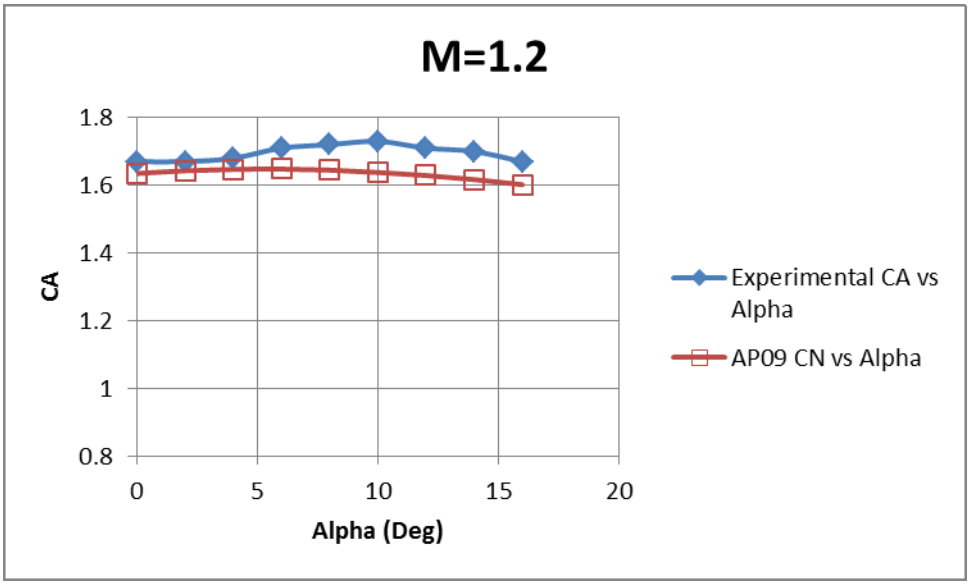

Figure 46. Graph of C_A versus Alpha for AP09 M=1.2.

IV. CONCLUSIONS

An ANSYS-CFX computation of the flow over a canard missile configuration was completed for Mach number of 0.2, 0.8 and 1.2 and their results compared against experimental data obtained from wind tunnel test and data obtained from AP09. The results show good agreement at Mach number of 0.2, 0.8 and 1.2 for C_A, C_N, and C_L. Results for drag show less agreement and are probably due to the turbulence models used. Further research and improvements with regard to turbulence models must be made in order to improve the computational codes and accuracy of predicting flow behavior. Considerable time and computational power was also expended in the use of ANSYS-CFX to complete the simulations for this research.

AP09 still presents itself as an attractive method for predicting aerodynamic performance of known configurations and has the advantage of requiring relatively less computational resources and time to complete as compared to ANSYS-CFX. It however, suffers from the lack of capability to define body geometries that do not exist in its database.

THIS PAGE INTENTIONALLY LEFT BLANK

V. RECOMMENDATIONS

A. USING OTHER SOLVERS

In the course of the study, it was observed that there were not many examples of other individuals using ANSYS-CFX for simulation of missiles. The study also failed to get any results from ANSYS-CFX for any test cases that involved flow in the control volume exceeding Mach 2. However, there were many more instances where ANSYS-FLUENT was used instead with success for missiles for cases in excess of Mach 2. Thus, some further studies can compare the results produced using ANSYS-FLUENT for the same geometry. In addition, these studies could be performed at the higher Mach numbers which were not achievable with ANSYS-CFX.

B. SOLVING FOR 3D BODY

In this study, a plane of symmetry was used to reduce the computational time required for doing each simulation. It is well known that the flow over the body at higher AOA may become asymmetrical. Hence, running only the half body does not allow this phenomenon to be correctly simulated over the missile body. As such, for studies involving high AOA, it may be useful to run the entire 3D model instead in order to be able to visualize this asymmetrical flow.

C. ACCURACY OF EXPERIMENTAL RESULTS AND MODELS

It was observed during the drawing of the 3D model in SolidWorks that some dimension given in the references for the drawing of the missile model could have been incorrect. For example, for the drawing of the canard, the specified leading edge sweep angle of 66.2˚ was not achievable if all the other dimensions for length were followed. The measurement in the CAD software yielded a leading edge sweep angle of 66.52˚ instead. This value was adopted in this study.

Obtaining accurate results from the faded scans of the experimental plots also proved to be difficult. The approach taken was to overlay a new grid over the results on a

computer and read off the values on the new grid. As such, small inaccuracies may have been introduced during the process of extracting the results for comparison. However, this is the recommended method in obtaining results from these old plots.

LIST OF REFERENCES

[1] E. B. Graves, and R. H. Fournier, "Stability and control characteristics at Mach numbers from 0.20 to 4.63 of a cruciform air-to-air missile with triangular canard controls and a trapezoidal wing." National Aeronautics and Space Administration, Langley Research Center, Hampton, VA, NASA TM X-3070, July 1974.

[2] F. G. Moore, T. C. Hymer, C. Downs and L. Y. Moore, "The 2002 Version of the NSWC Aeroprediction Code: Part 1 – Summary of New Theoretical Methodology," Dahlgren Division Naval Surface Warfare Centre, Dahlgren, VA, NSWCDD/TR-01/108, Mar 2002.

THIS PAGE INTENTIONALLY LEFT BLANK

APPENDIX A

A. Missile model drawing steps in solidworks

1. The steps outlined here were used to create the missile model used in the simulations. Start SolidWorks and select “New” and create a new part. Check under “Options,” “Units” that the selected units are “IPS” (Inch Pound Second).

2. Change the view to “Front” and select “Sketch.”

3. Start by drawing the missile body. Draw a rectangle about the origin with the following dimensions as shown in Figure 47. This is to place the moment reference at the origin where CFX computes the Torque. This step is important. Calculating the Torque on the missile otherwise is complicated.

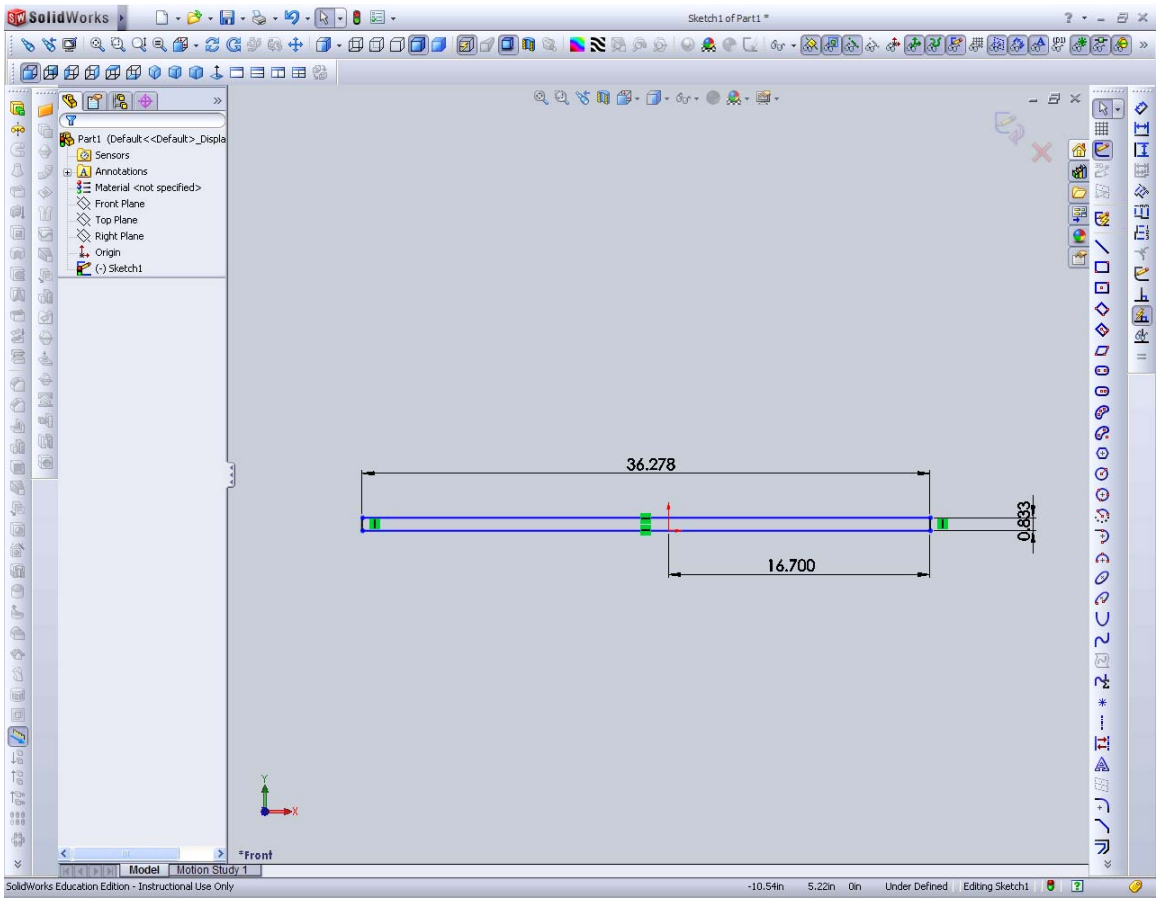

Figure 47. Placement of origin at missile moment reference.

4. Draw a “Center point arc” to form the hemispherical nose.

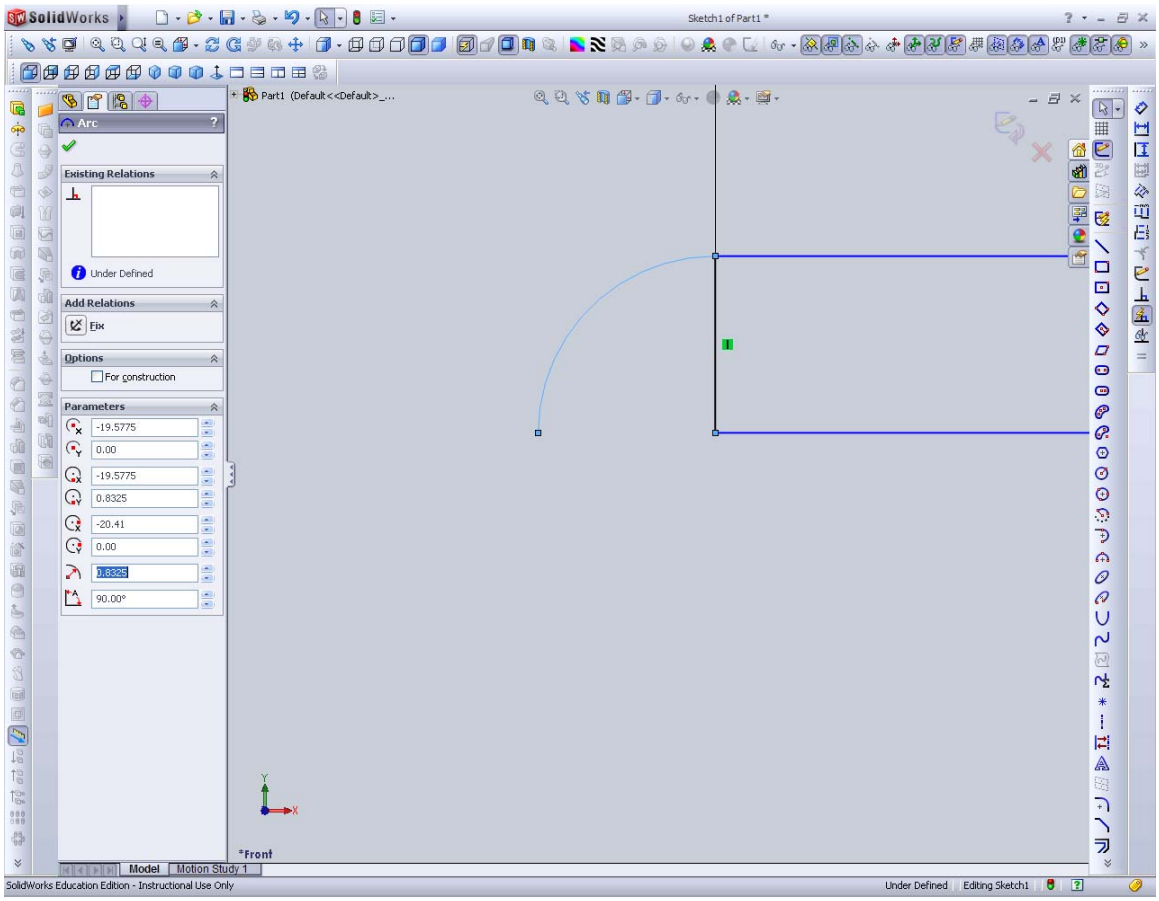

Figure 48. Drawing of hemispherical nose.

5. Draw line to close the body, and then delete the line separating the arc and rectangle to form a closed body.

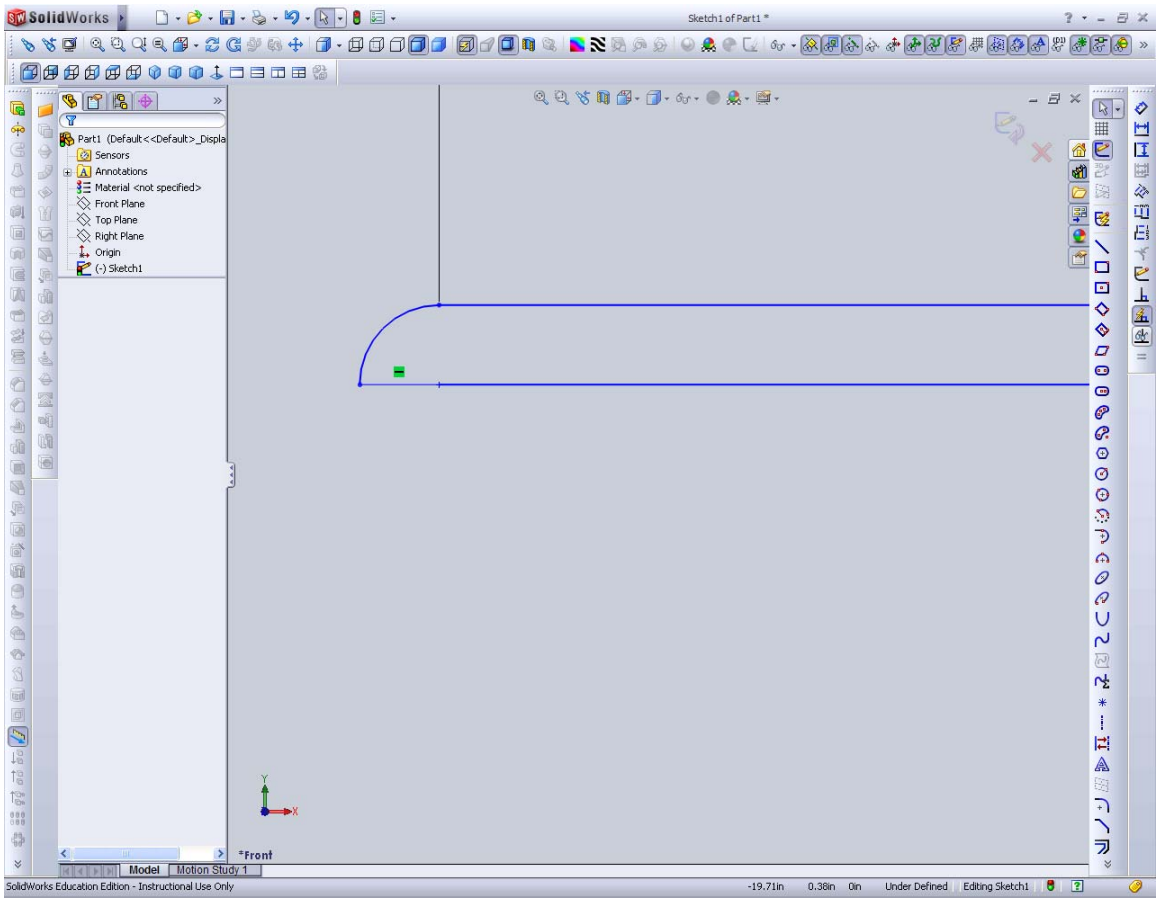

Figure 49. Completed cross section of missile body.

6. Select Revolved Boss/Base and then select center line. A cylinder should form. Click the green check to accept. Missile cylindrical body is now complete.

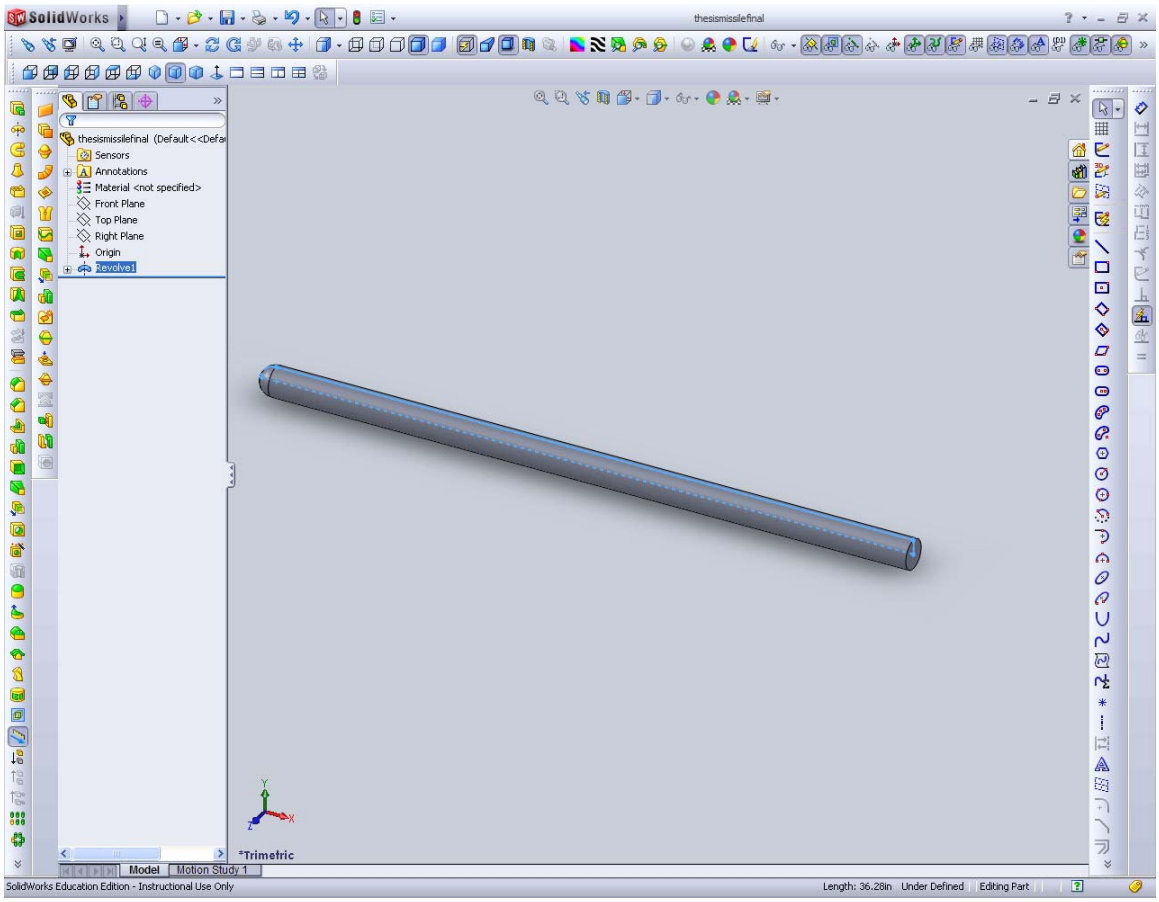

Figure 50. Completed missile body.

7. The hinge must be added to connect the canard to the missile body. Add construction lines and a point 5.3075 from the base of the nose cone. This is the center of the canard and the hinge. At this point, draw a circle centered on the hinge line of radius 0.08”, then click the “Fully define sketch” button.

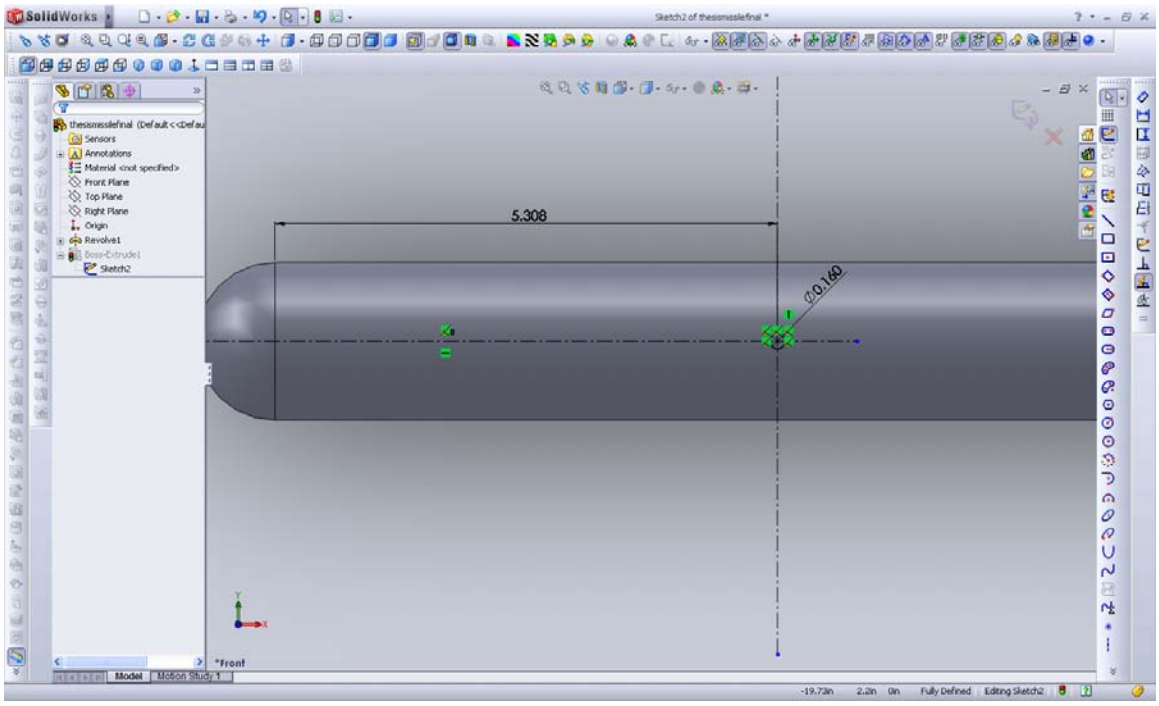

Figure 51. Sketching hinge of canard.

8. Extrude this circle by 0.8725” from the center. This will form the hinge of the canard.

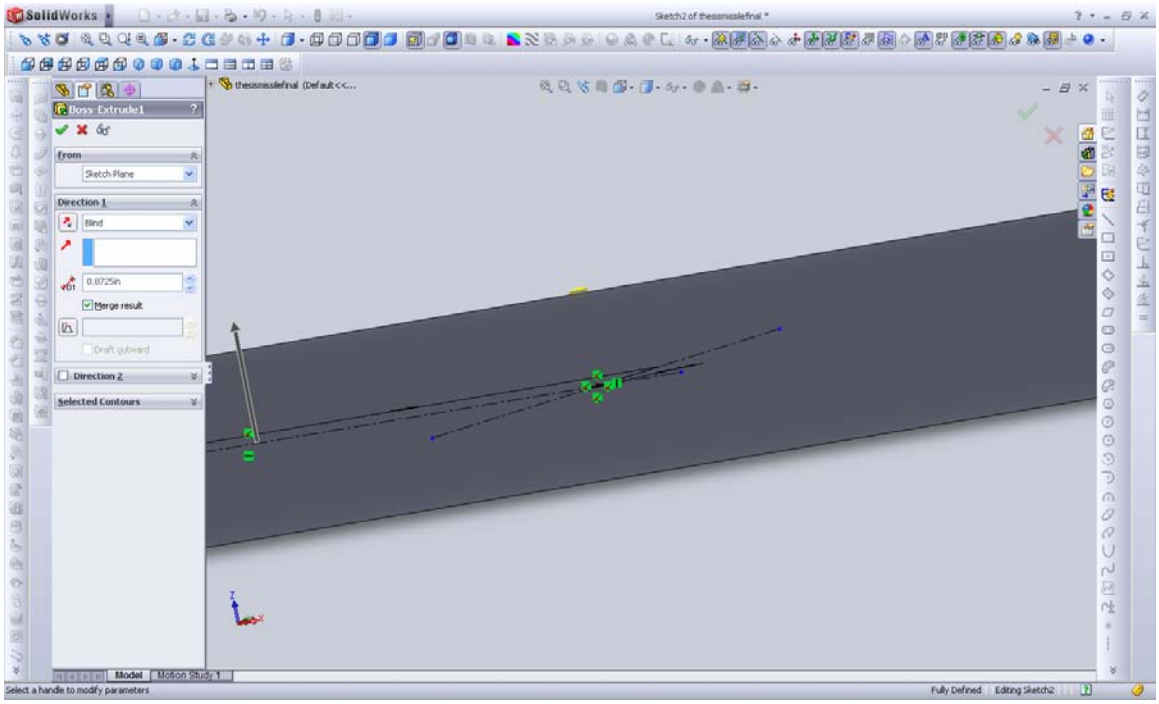

Figure 52. Extruding canard hinge from center of missile body.

9. Click “Insert – reference geometry – plane.” Select Front Plane as First Reference plane.

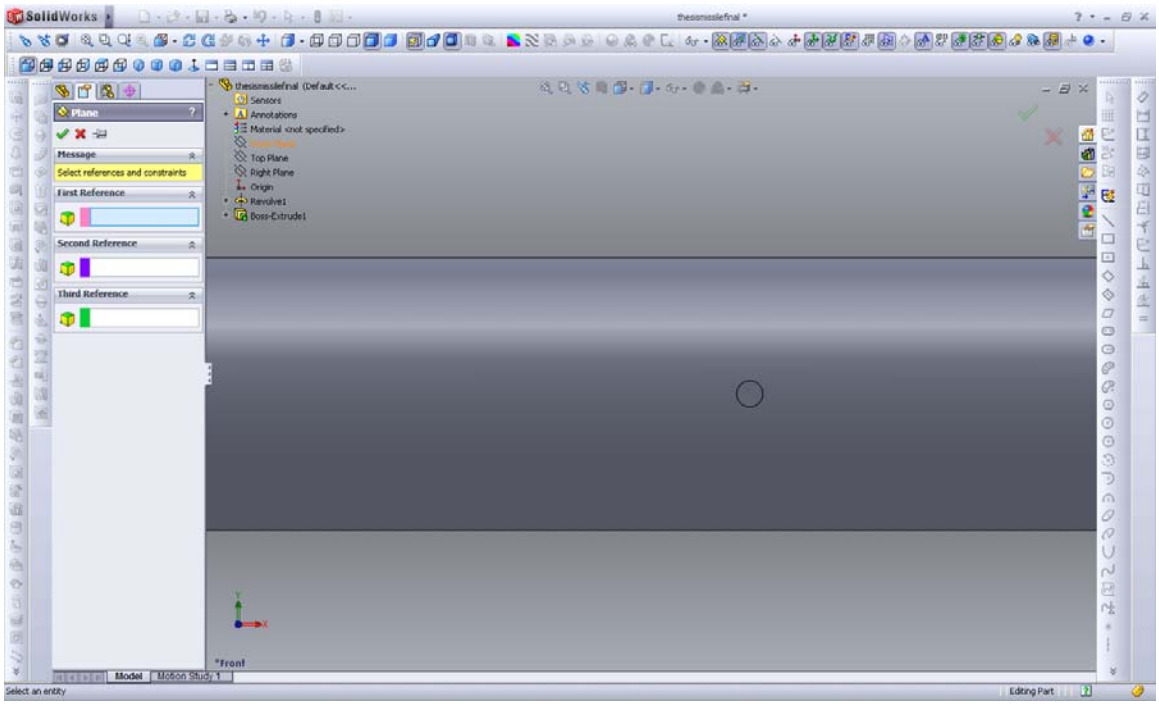

Figure 53. Add reference geometry window.

10. Set plane offset to 0.8725." This puts the plane at the tip of the hinge. Rename this plane "Canard Root Plane."

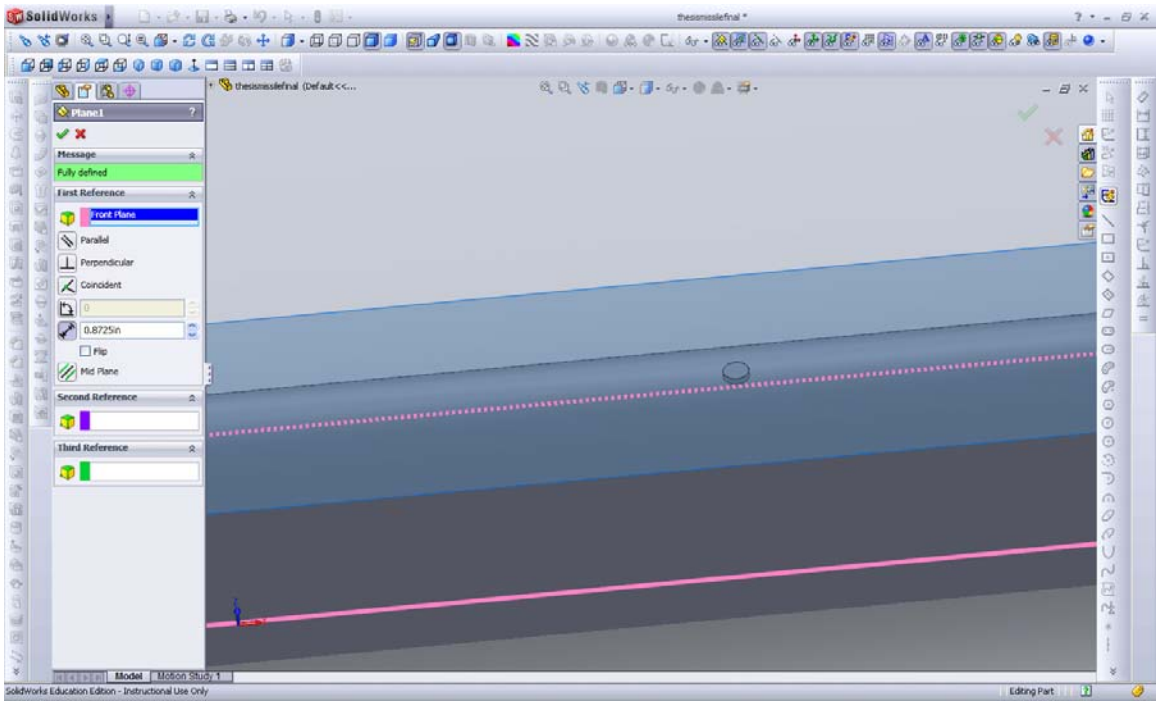

Figure 54. Adding reference plane at hinge tip.

11. Sketch a new drawing on the “Canard Root Plane.” Add a point at the center of the hinge and constructions lines.

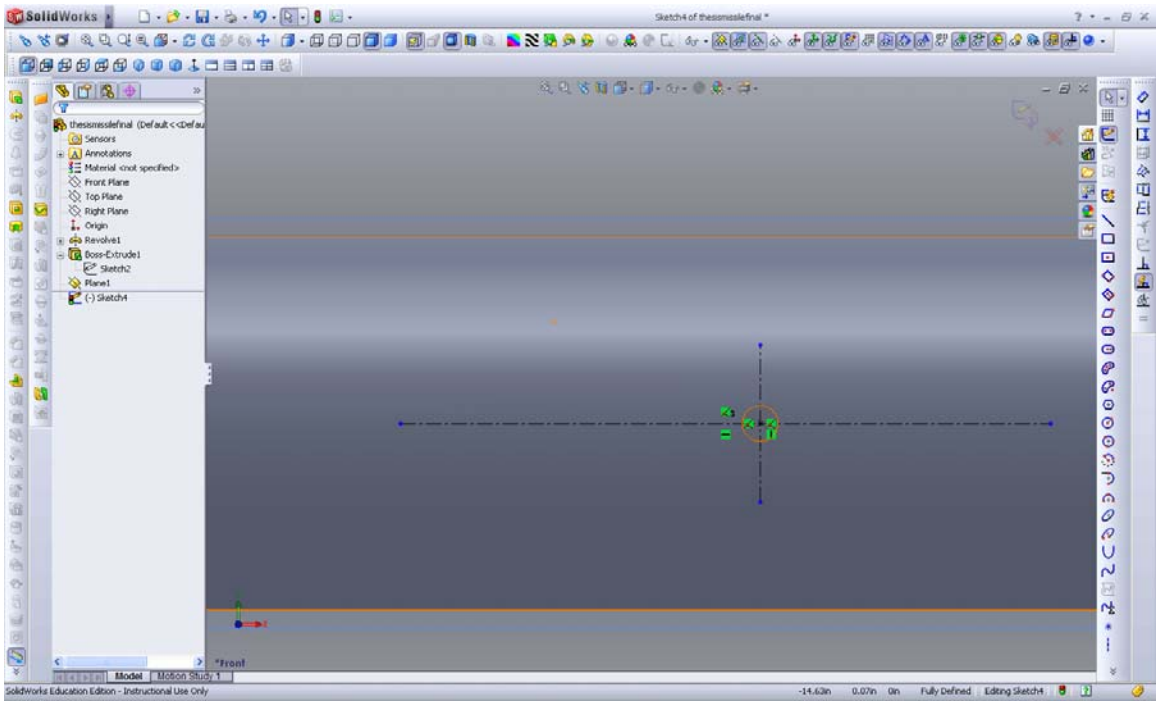

Figure 55. Adding construction lines for canard root.

12. Add 2 more points on the vertical construction line and dimension them to be 0.049” from the centre line.

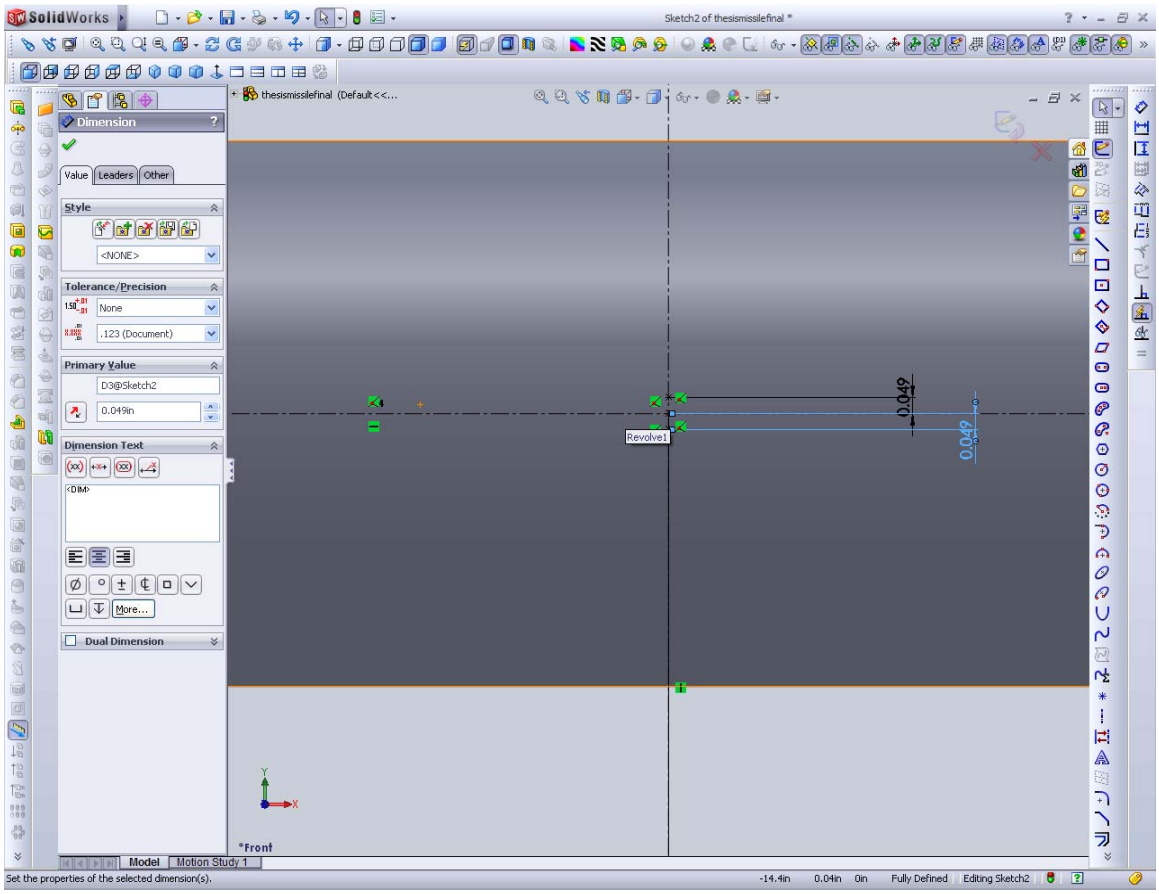

Figure 56. Adding canard thickness construction points.

13. Add another 2 points on the horizontal line and dimension them to form the leading and trailing edge of the root chord.

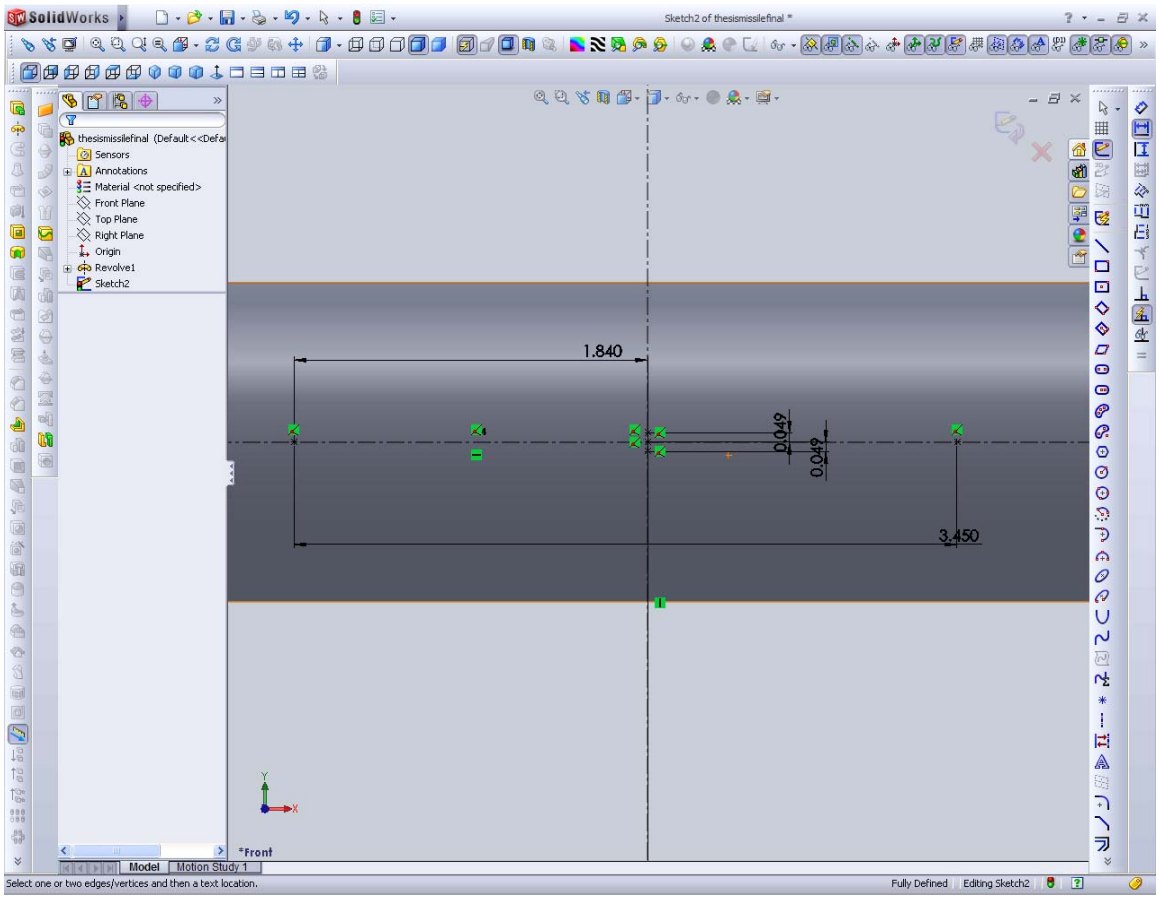

Figure 57. Adding leading and trailing edge construction points for canard.

14. Draw 2 lines to form the front wedge.

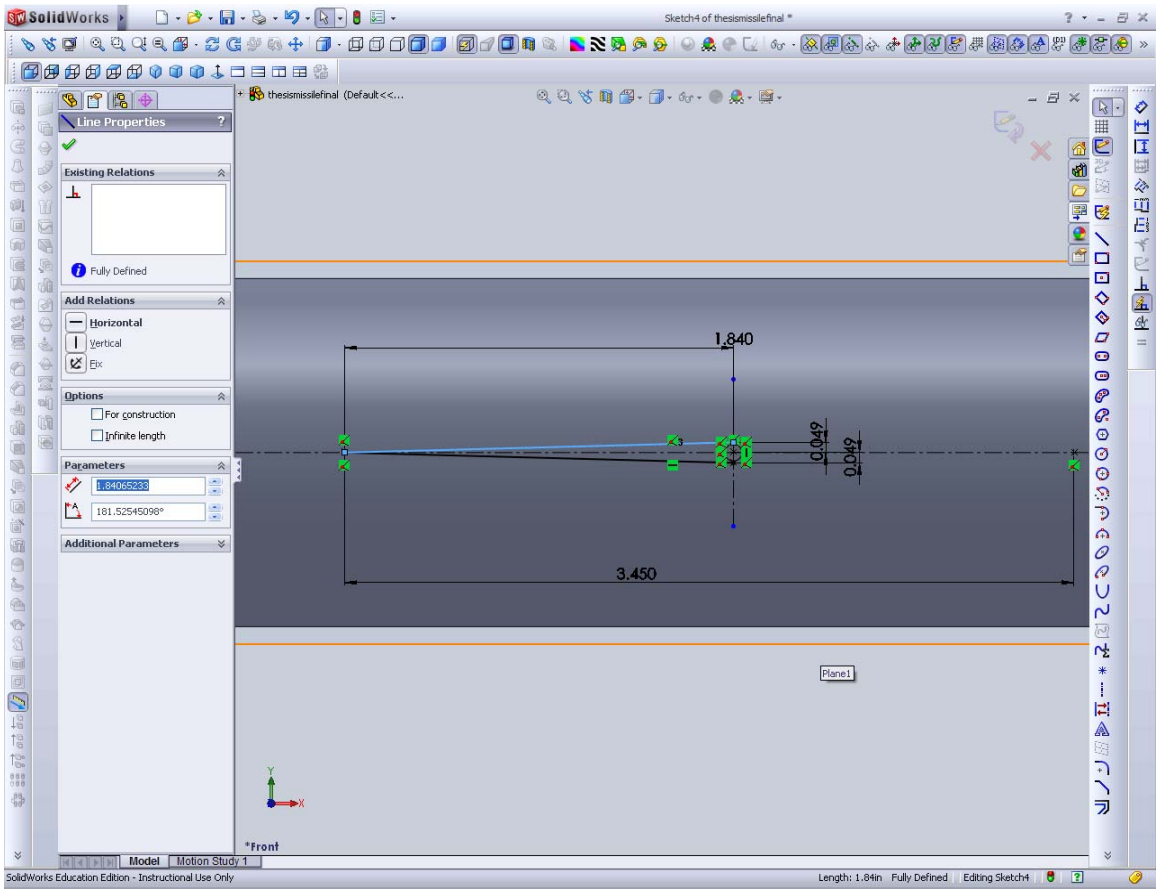

Figure 58. Drawing canard front wedge.

15. Add 2 more lines to create the trailing wedge. The sketch for the canard root is now complete.

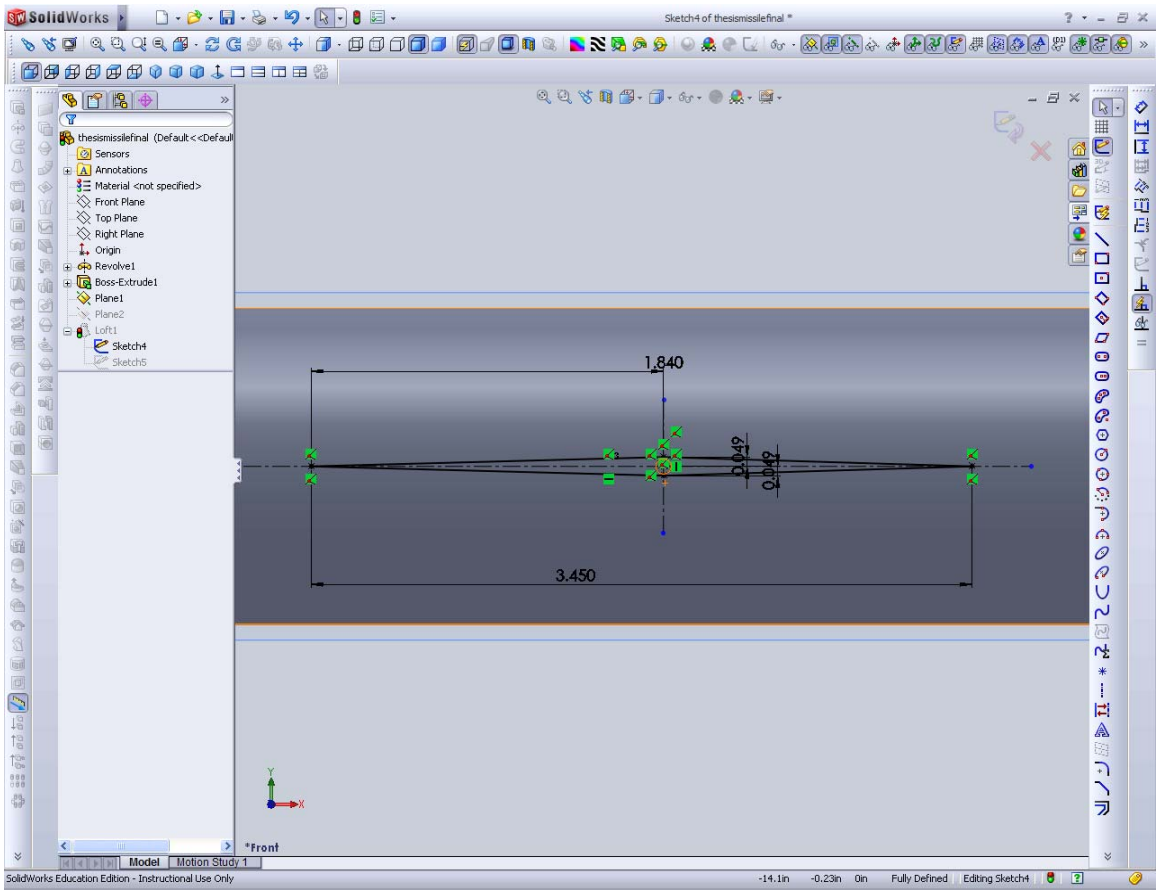

Figure 59. Drawing the trailing wedge of the canard.

16. Insert a 2nd reference plane “Canard Root Plane” as reference. The offset is the height of the canard. i.e. 1.72”. Rename this plane “Canard Tip Plane.”

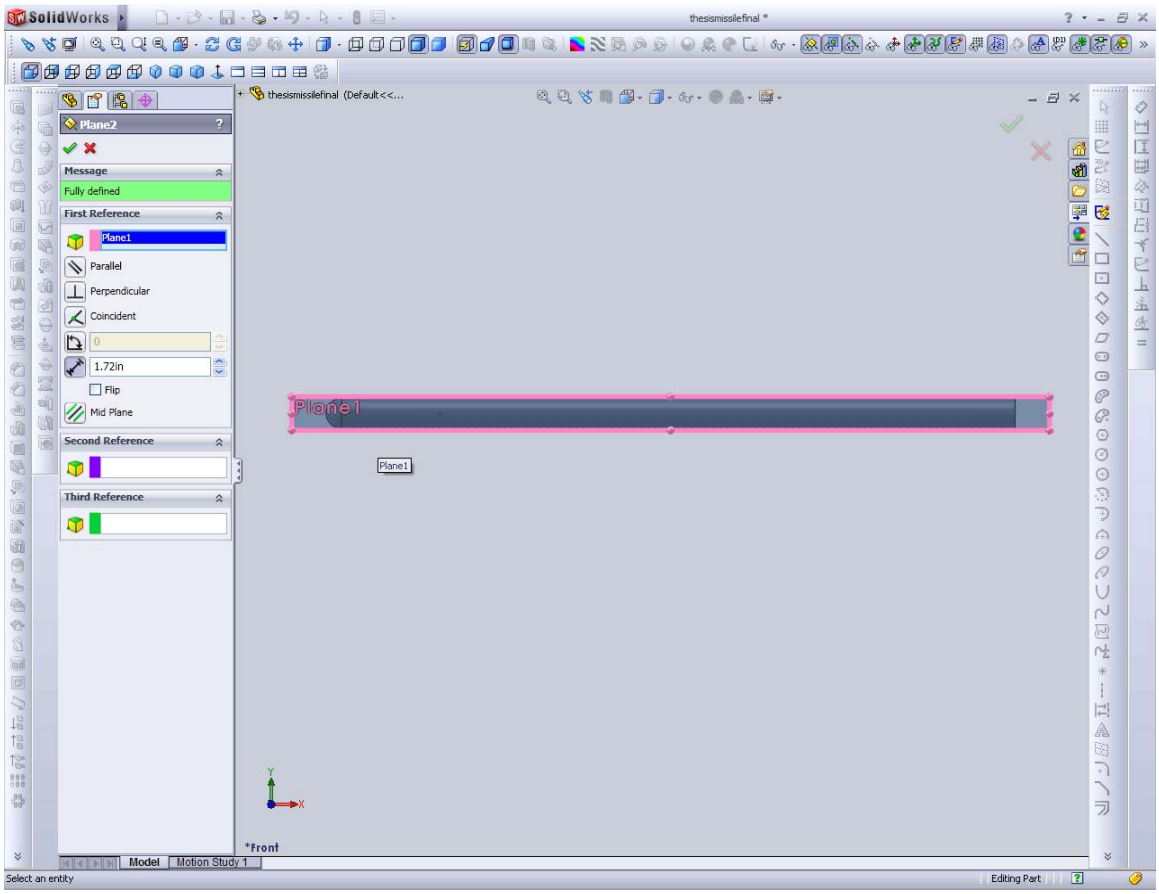

Figure 60. Adding Canard Tip Plane.

17. Edit Sketch in “Canard Tip Plane.” Add a point and dimension it to the front tip of the canard as shown.

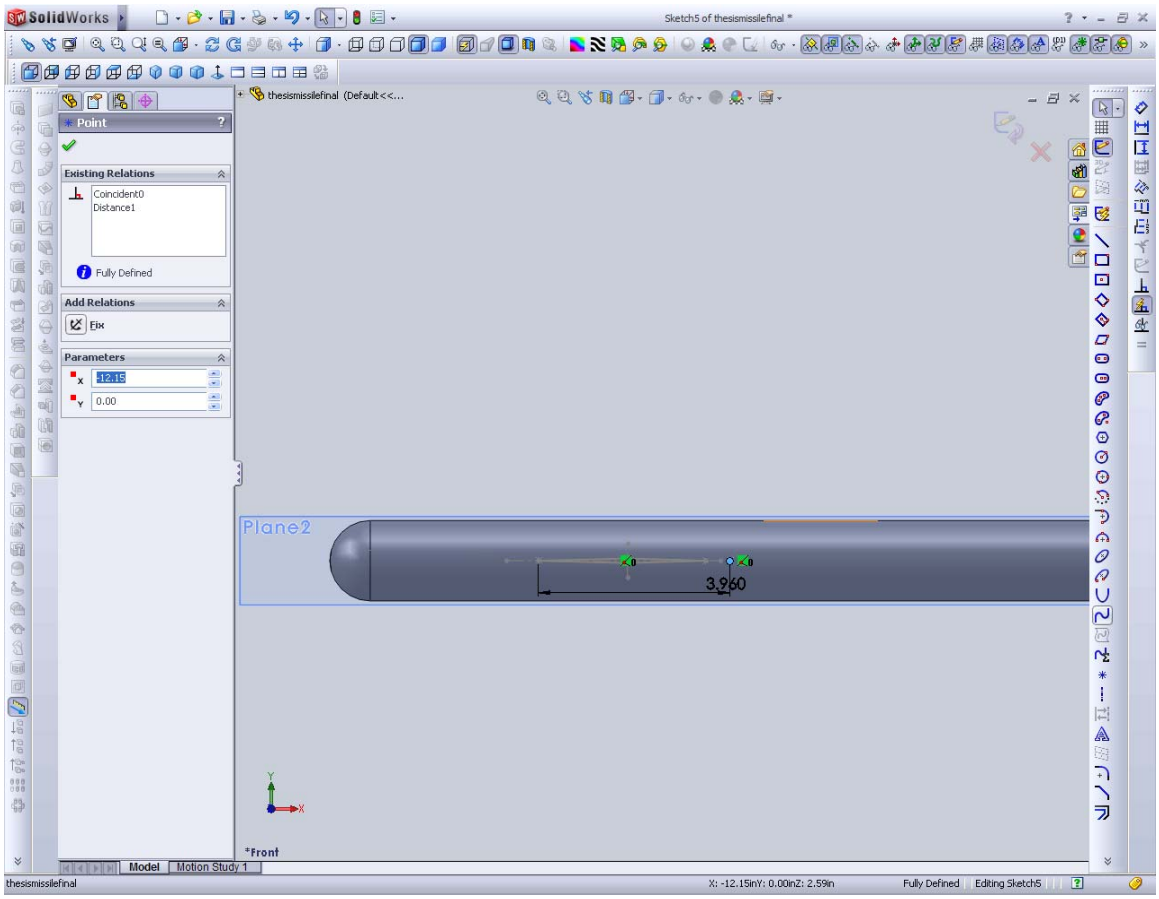

Figure 61. Adding canard tip.

18. Select Loft. Select the canard base and tip and add them to profiles. Preview the canard generated. Merge result should be checked.

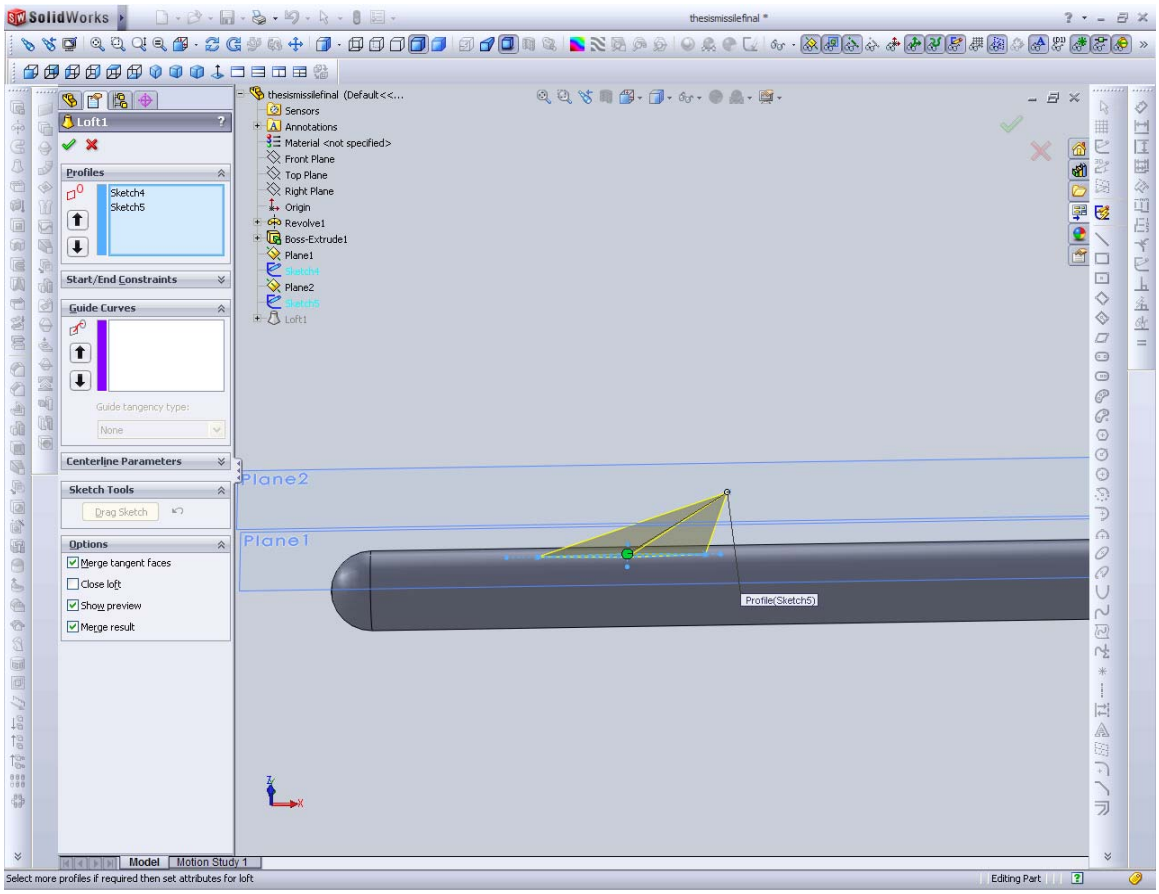

Figure 62. Loft to create canard.

19. Insert a 3rd reference plane using “Front Plane” as reference. The offset is the radius of the body 0.8325”. Rename this plane “Tail Root Plane.”

20. Edit Sketch on “Tail Root Plane.” Add construction lines and draw the general shape of the tail root. Dimension the root as shown.

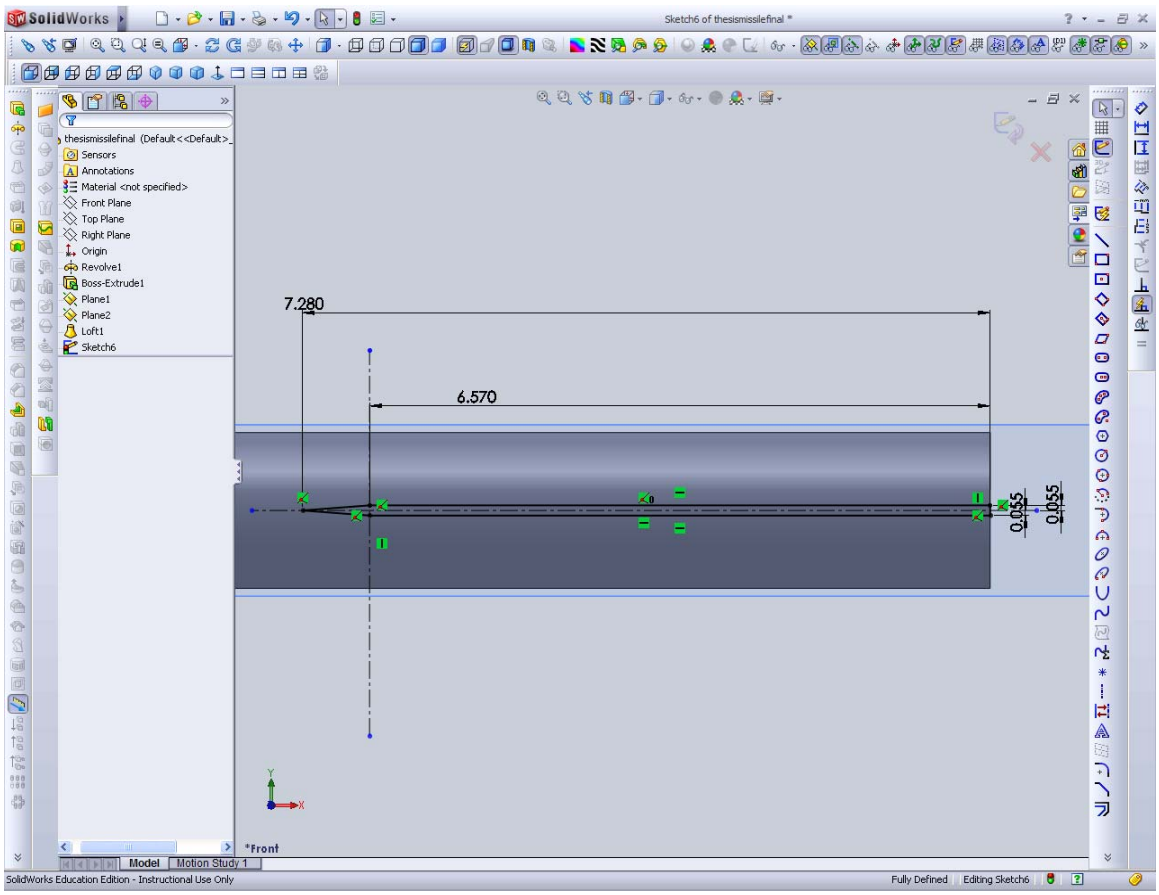

Figure 63. Adding Tail root.

21. Insert a 4th reference plane with “Tail Root Plane” as reference. The offset is the height of the wing. i.e. 2.54”. Rename this plane “Tail Tip Plane.”

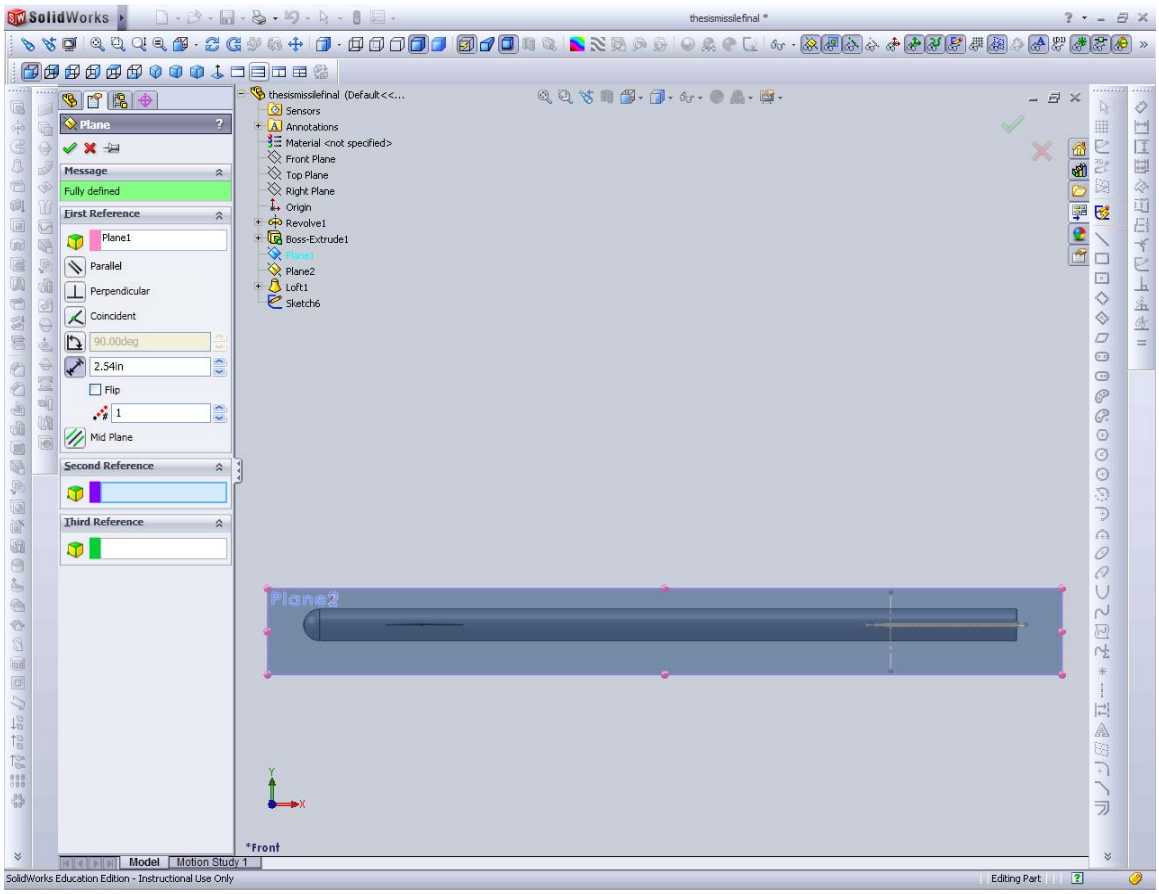

Figure 64. Adding Tail Tip reference plane.

22. Edit Sketch in “Tail Tip Plane.” Using the tail root as a reference for the sketch, draw the general shape of wing tip and dimension as shown.

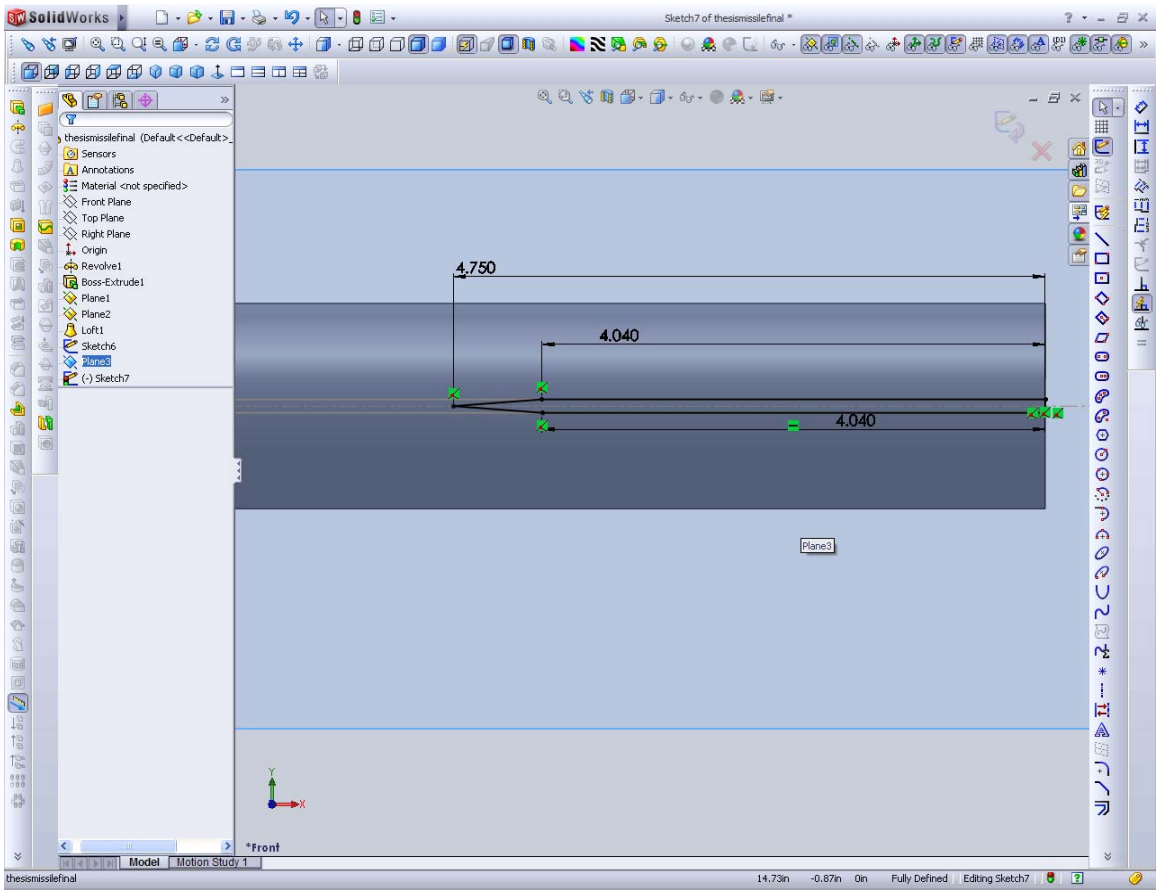

Figure 65. Adding Tail Tip on Tail Tip Plane.

23. Select Loft. Select the wing root and tip and add them to profiles. Preview the wing generated. If necessary, shift the loft start and end points to ensure the wing is lofted correctly. Merge result should be checked.

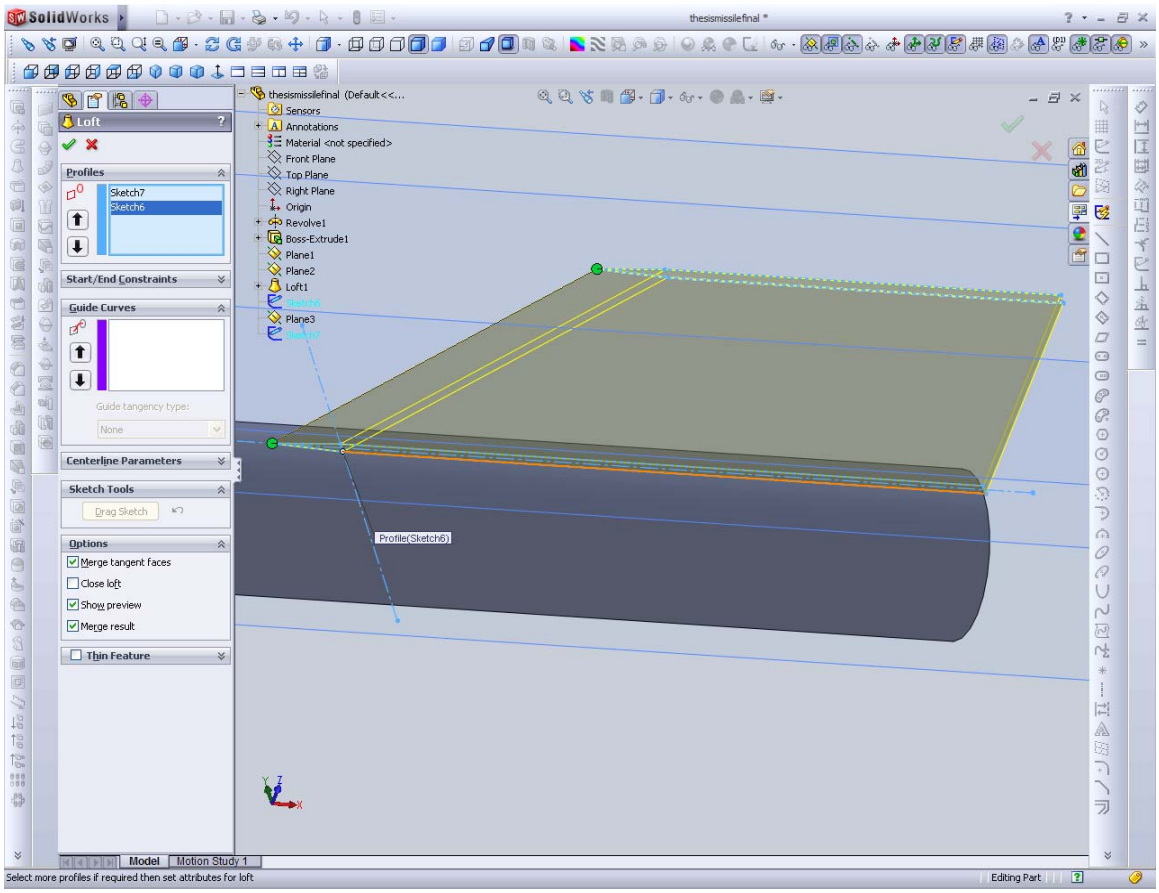

Figure 66. Loft to create tail.

24. Click “Extrude” and extrude the root of the wing into the body. Merge result should be checked. This mates the wing into the missile body.

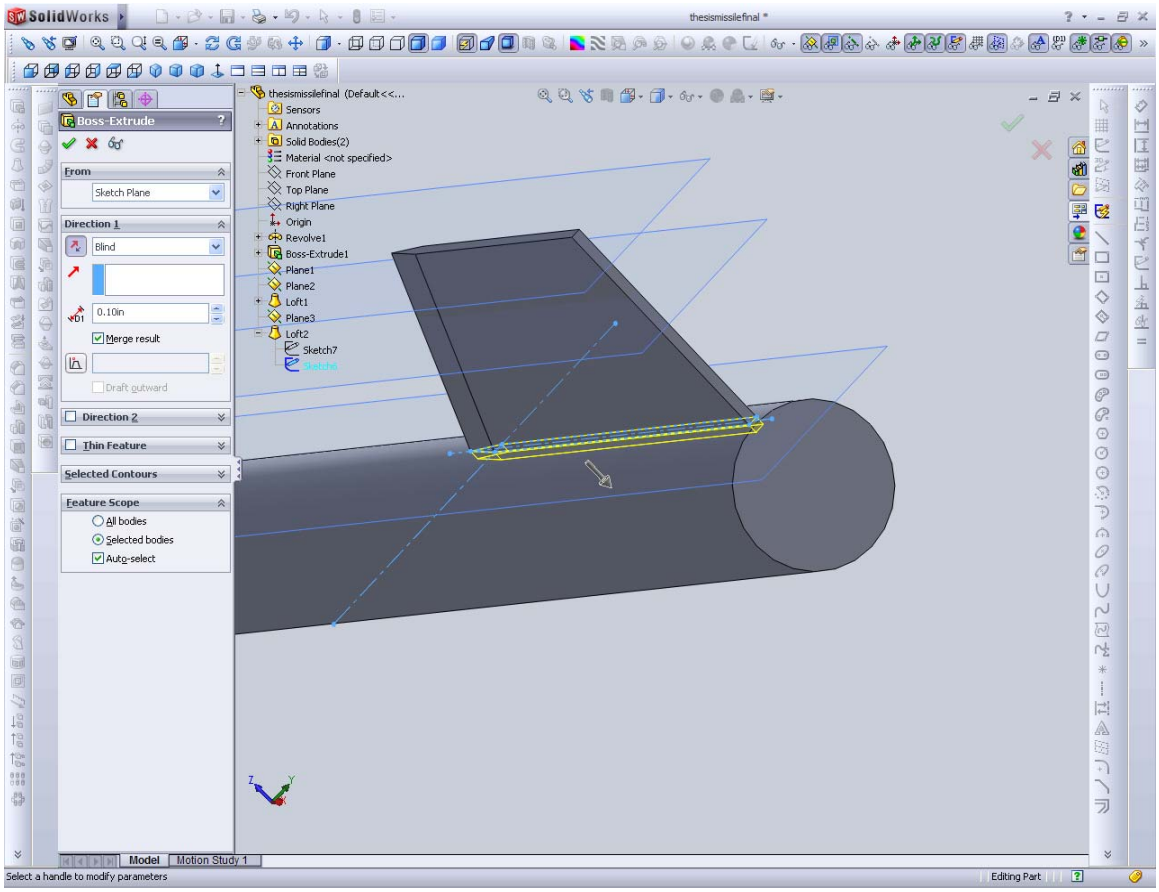

Figure 67. Mating Tail to missile body.

25. Select, Insert, Pattern/Mirror, Circular pattern. Under features to pattern, select the tail root extrusion first. Select the missile body as the axis for the pattern. Next add another circular pattern. This time select the loft. 3 additional tail fins should now be produced.

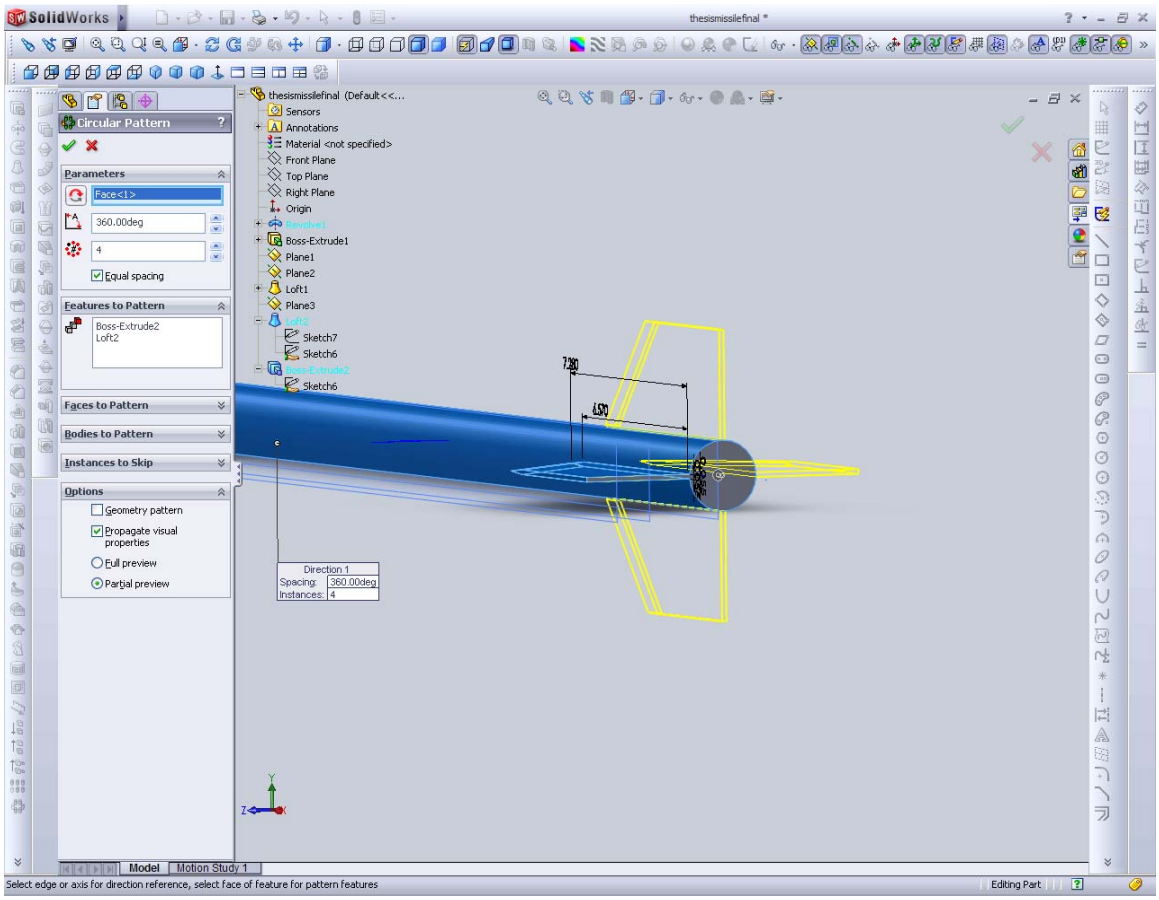

Figure 68. Patterning of tail fins.

26. Repeat for canard, starting with the hinge first. Select, Insert, Pattern/Mirror, Circular pattern. Under features to pattern, select the hinge extrusion first. Select the missile body as the axis for the pattern. Next add another circular pattern. This time select the canard loft. 3 additional canards should be produced. The missile is now complete.

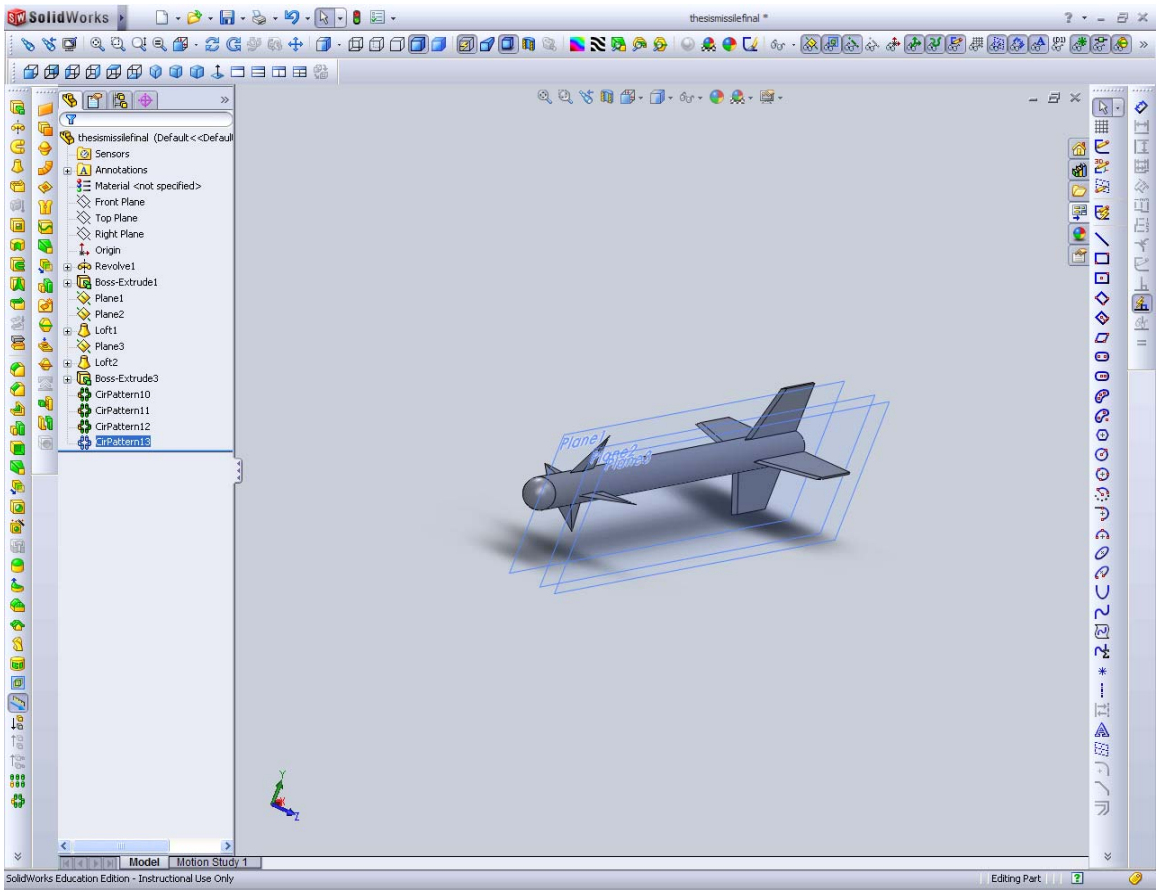

Figure 69. Completed missile model.

APPENDIX B

A. AP09 INPUT INSTRUCTIONS

This section documents the settings used in AP09 for the generation of results for this missile model.

1. Start AP09. At the main screen, go to “New,” “Canard/Wing-Body-Tail,” “Canard/Wing Control.”

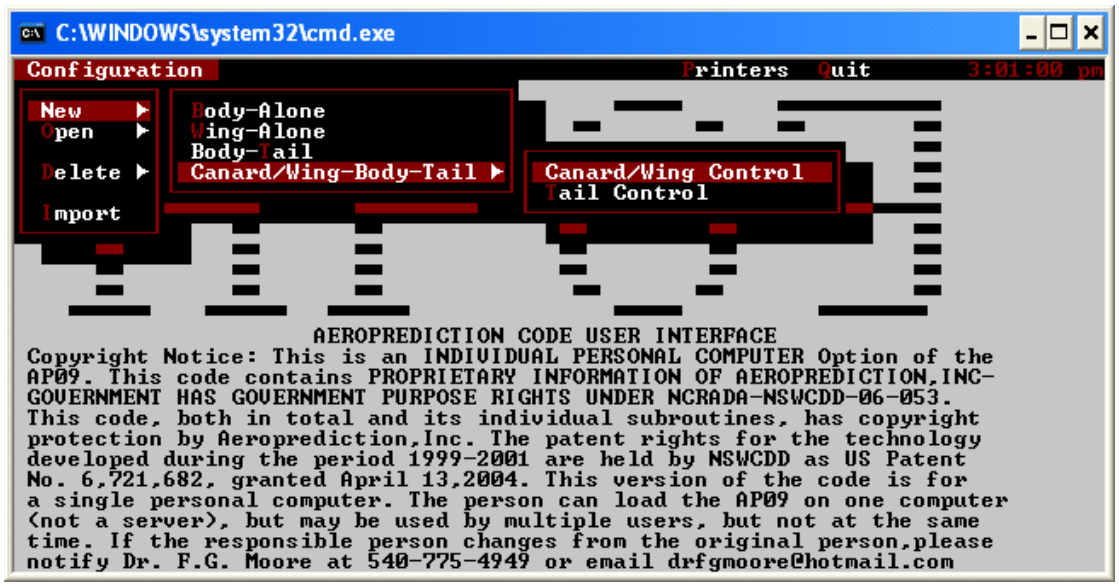

Figure 70. Creating a new Canard/Wing configuration.

2. Now go to “Inputs”, “Geometry,” “Geometry (Inches).” This sets the input of units into AP09 in inches.

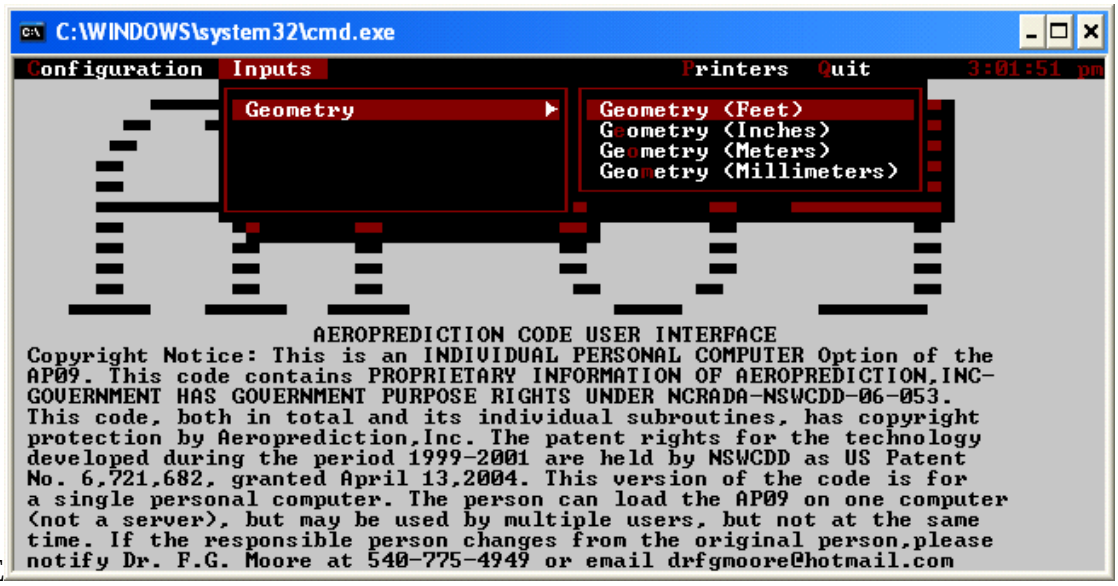

Figure 71. Selecting input units as inches.

3. The Canard/Wing-Body-Tail Geometry main window is displayed. Click “Nose geometry.”

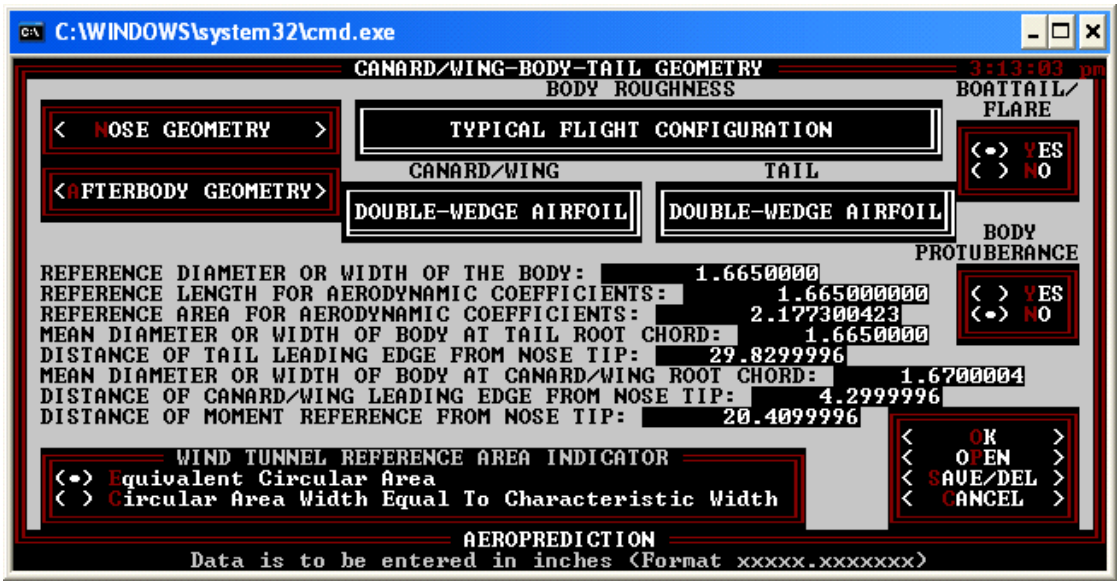

Figure 72. Canard/Wing-Body-Tail Geometry main window.

4. Select Circular nose cross sectional shape. Select Hemisphere nose profile. Input circular radius at the end of nose as 0.8325. Click “OK.” This brings you back to the Canard/Wing-Body-Tail Geometry main window.

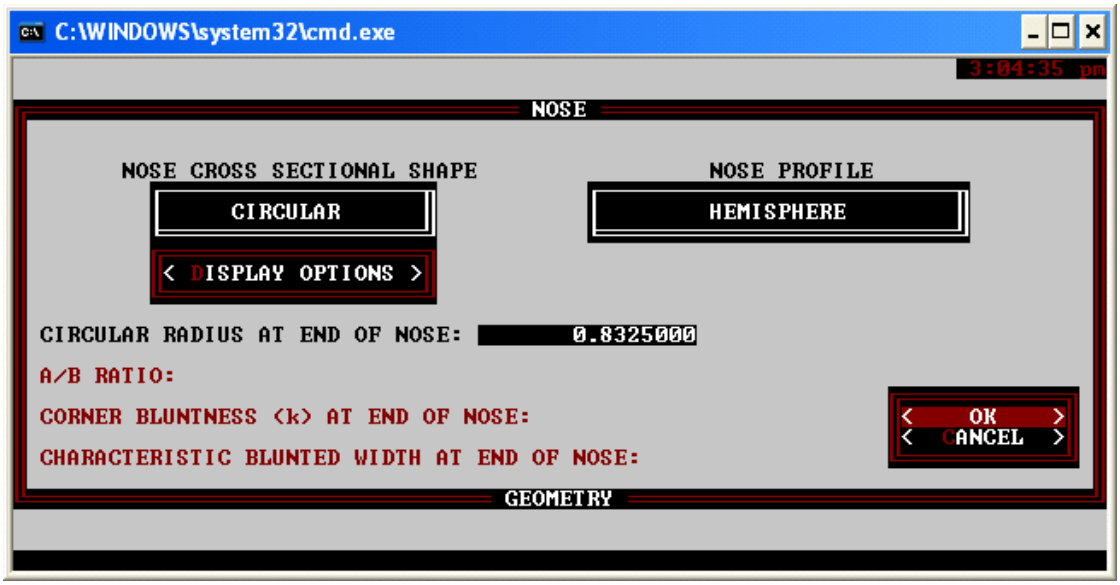

Figure 73. Nose input screen.

5. Click “Afterbody geometry.” This brings up a new input window. Select “Circular” afterbody cross sectional shape.

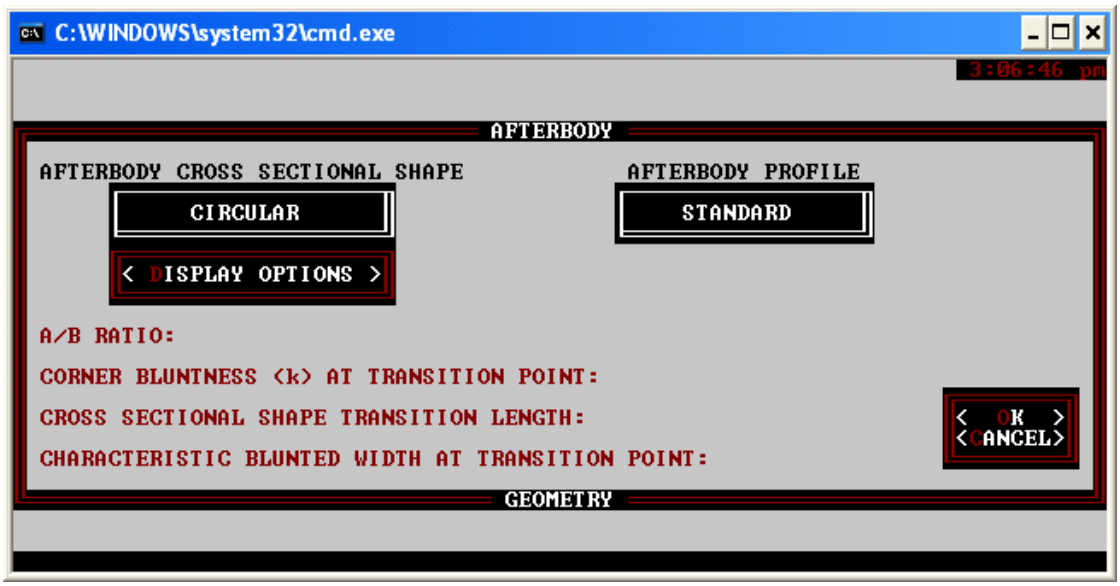

Figure 74. Input window for body cross sectional shape.

6. Select “Standard” afterbody profile. Key in 36.11 for length. Click “OK.” This brings you back to the canard/wing-body-tail geometry main window.

Figure 75. Afterbody length input.

7. Toggle “Boattail/Flare” to “Yes.” This brings up a new window. Key in 37.11 and radius of 1.75”. Click “OK” to return to the Canard/Wing-Body-Tail Geometry main window.

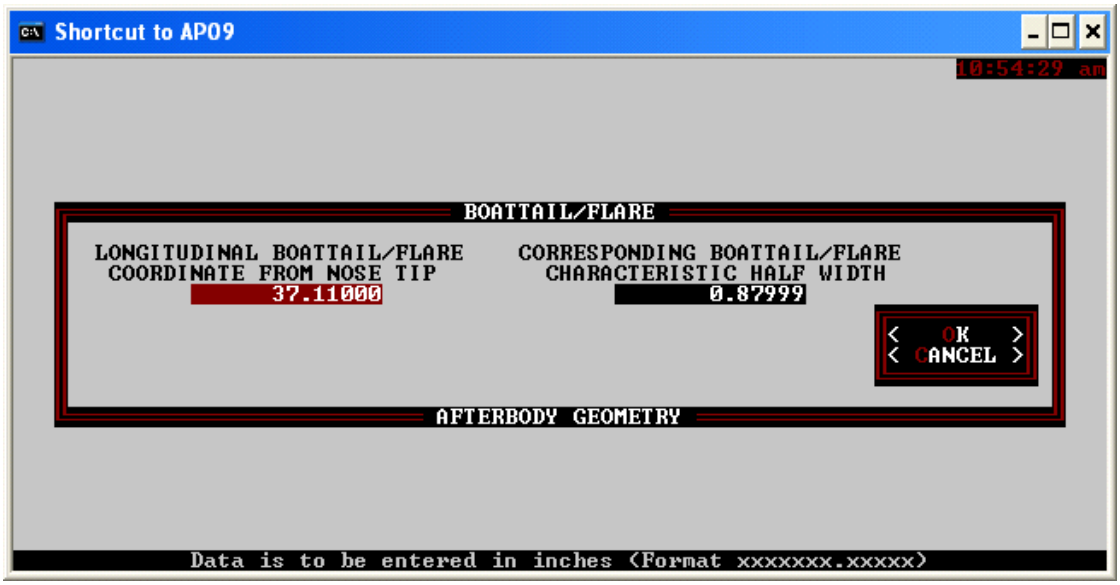

Figure 76. Boattail input screen.

8. Select Canard/Wing Double-Wedge Airfoil. This brings up the input screen for the canard. Figure 77 shows the settings that were used for the describing the canard. Click “OK” to return to the Canard/Wing-Body-Tail Geometry main window.

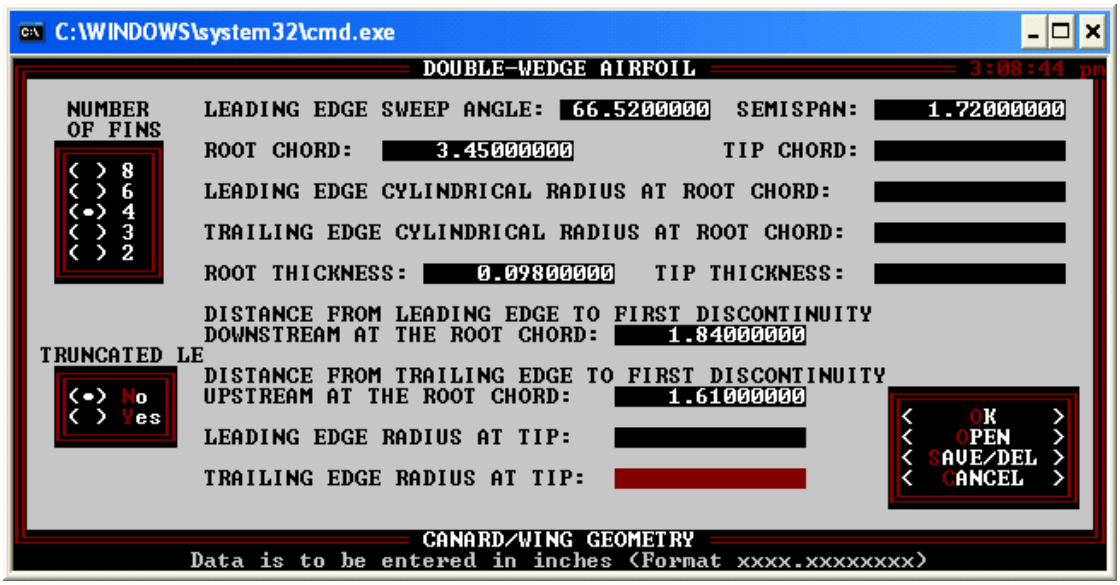

Figure 77. Canard input screen.

9. Select Tail Double-Wedge Airfoil. This brings up the input screen for the Tail wing. Figure 78 shows the details that were used for the describing the wing. Click “OK” to return to the Canard/Wing-Body-Tail Geometry main window.

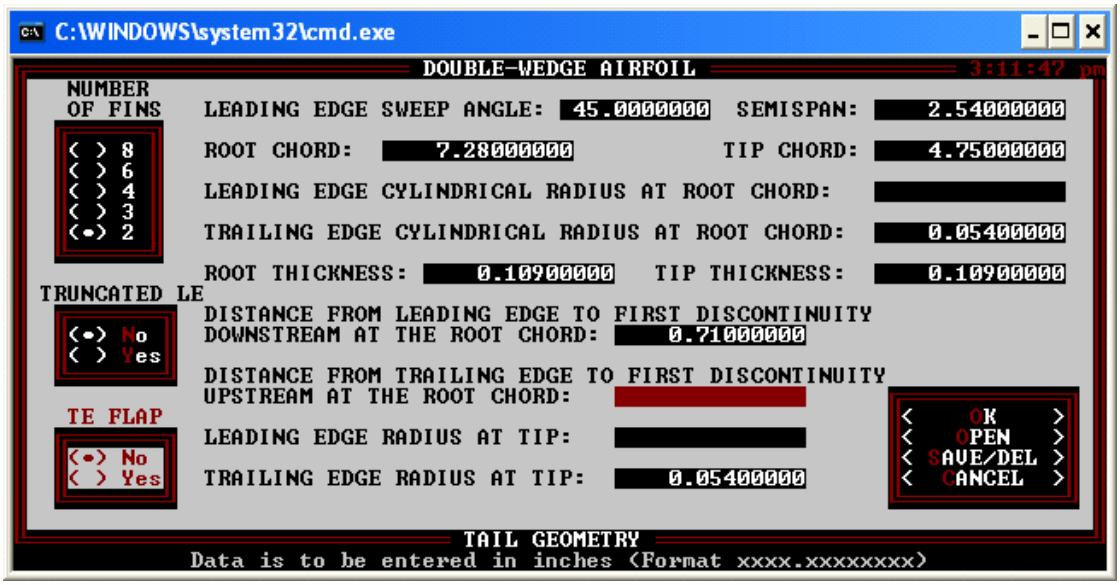

Figure 78. Tail wing input screen.

10. Back at Canard/Wing-Body-Tail Geometry main window, key in the reference diameter, length and area. The following were used. Click “OK” to return to the AP09 main window.

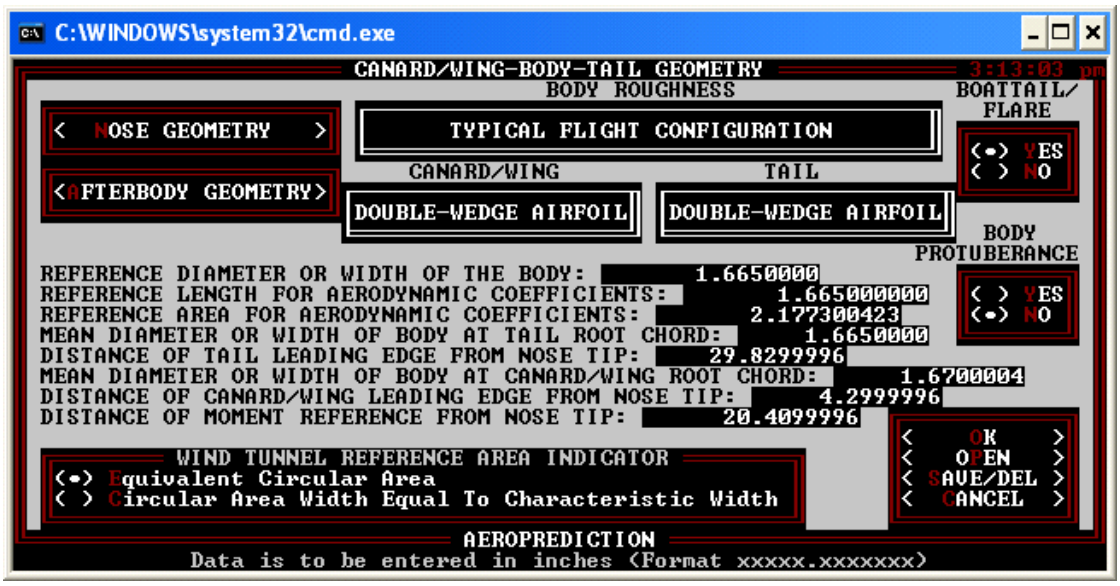

Figure 79. Input for reference geometry.

11. Click “Generate,” “Geometry Sketch,” “Screen only.” A preview of the missile geometry is generated.

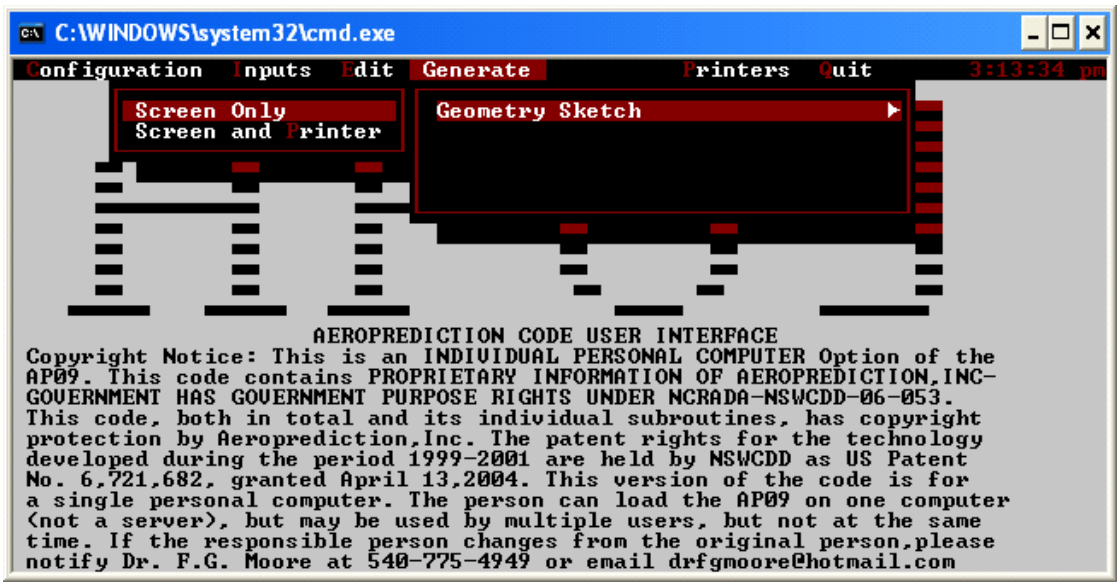

Figure 80. Viewing generated geometry.

12. Click “Inputs,” “Free-Stream Conditions (Feet),” “Alpha Sweep.” This brings up a new window. An Alpha sweep is for generation of a range of aerodynamic results for a number of AOA.

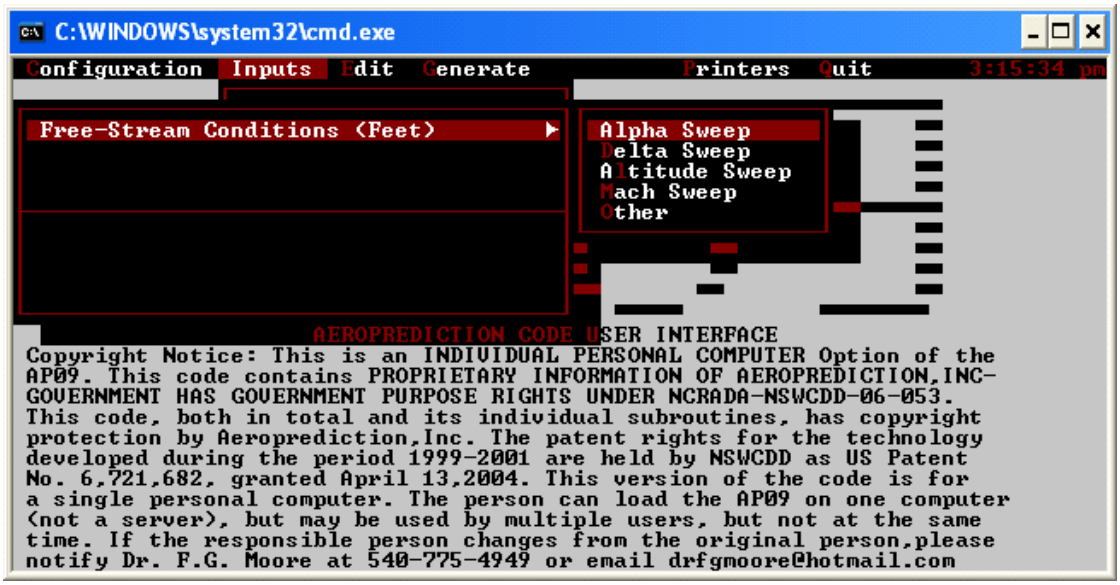

Figure 81. Selection of “Alpha Sweep.”

13. Key in initial AOA, final AOA and interval size. Select missile orientation as “0 (plus configuration).” Key in the Mach numbers of interest. Key in altitude as 1ft. 1 ft is selected as the wind tunnel conditions were probably atmospheric conditions at ground level. Click “OK” to return to the main window.

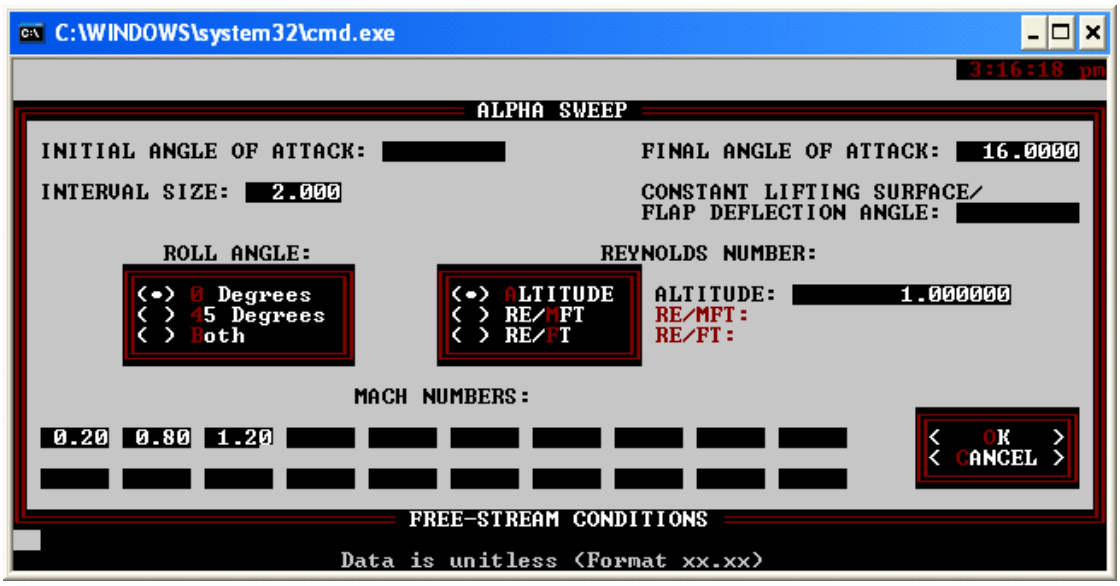

Figure 82. "Alpha Sweep" input window.

14. Click "Inputs," "Options (Feet)." This brings up a new window.

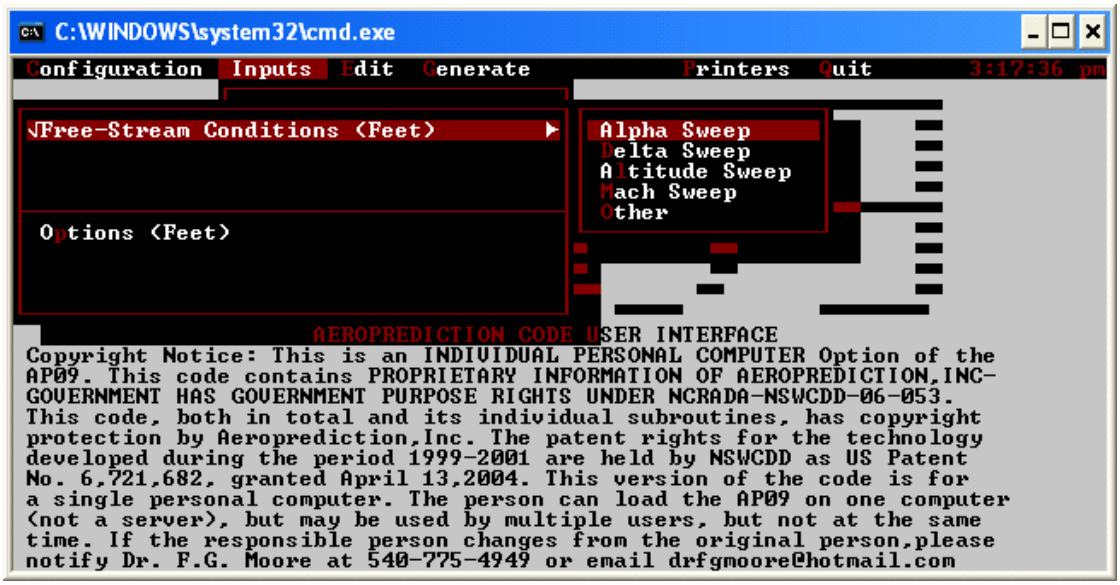

Figure 83. Selecting "Options (Feet)."

15. Key in a title for the project. Leave all other settings as default.

Figure 84. “Options (Feet)” input window.

16. Click Generate, Aerodynamics output file. This generates the results for the present AOA and Mach numbers.

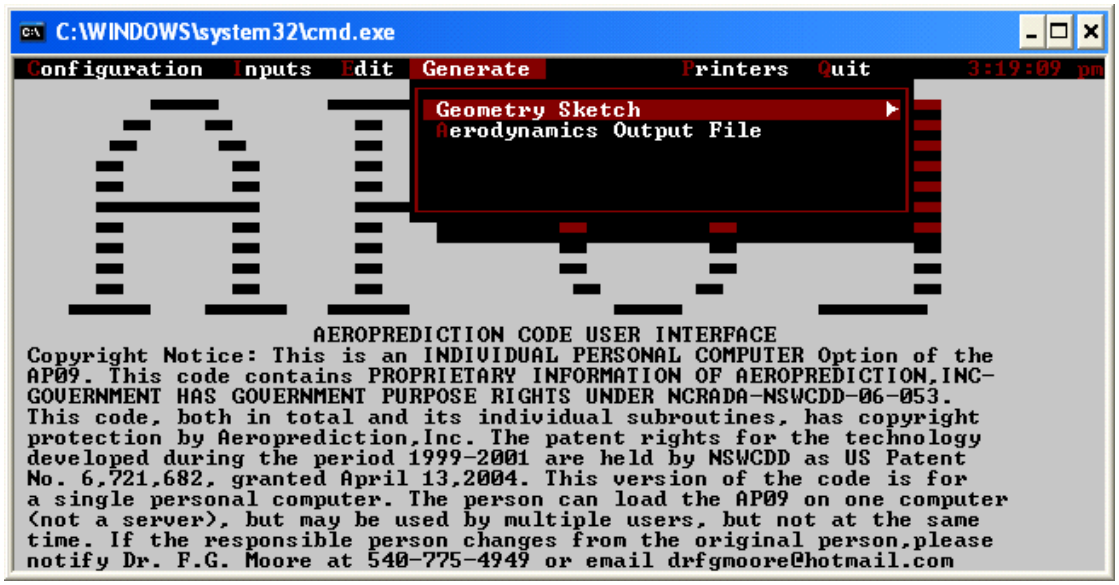

Figure 85. Generating results.

17. The following two screens should be observed during the results generation.

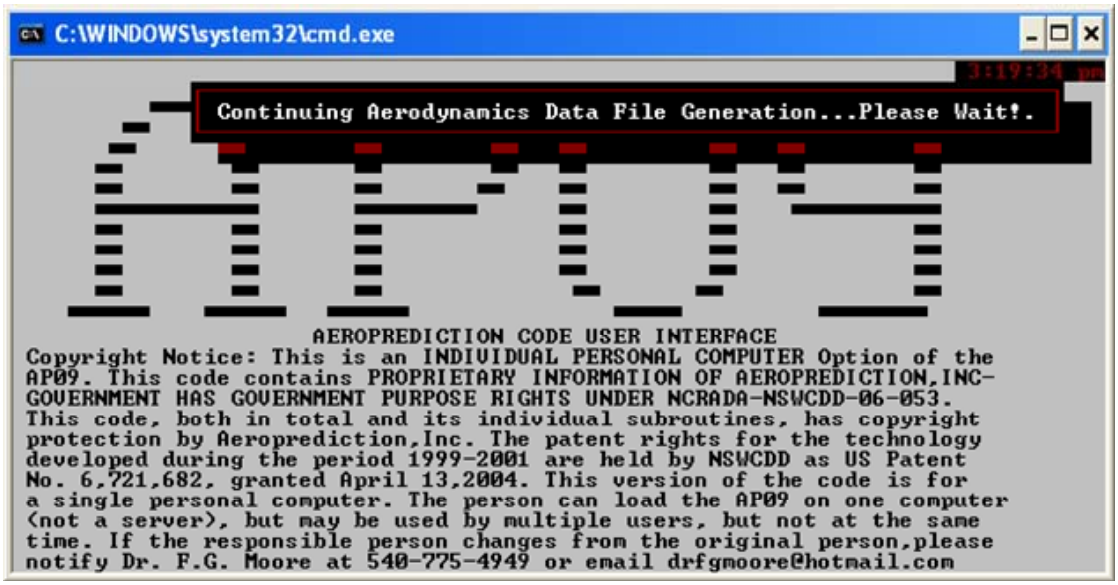

Figure 86. Results generation message.

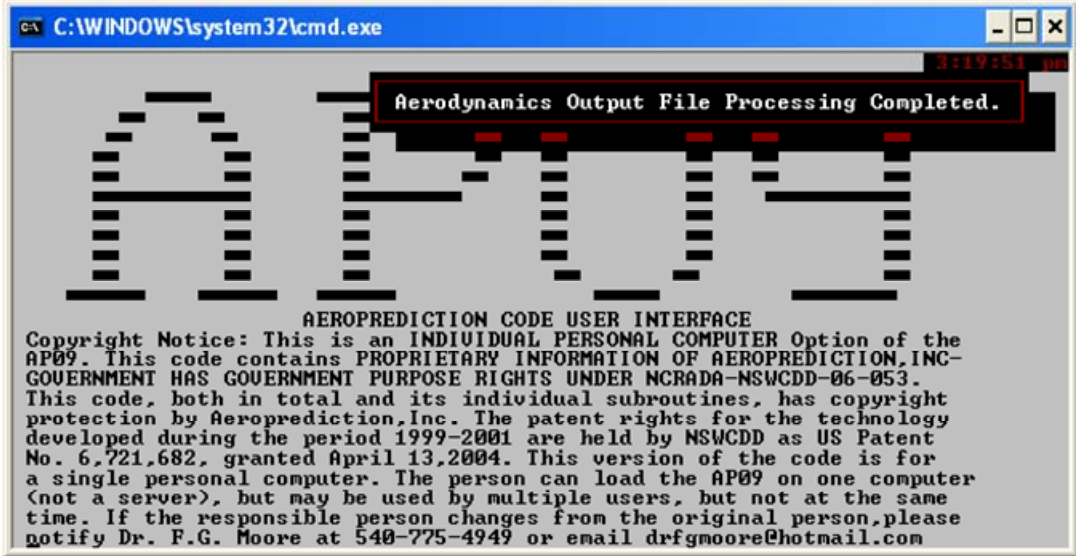

Figure 87. Output file processing.

18. Click on “Outputs,” “Aerodynamics,” “Plots” to view data on screen. Otherwise, click on aerodynamics output file and select Copy to copy results to a .txt file.

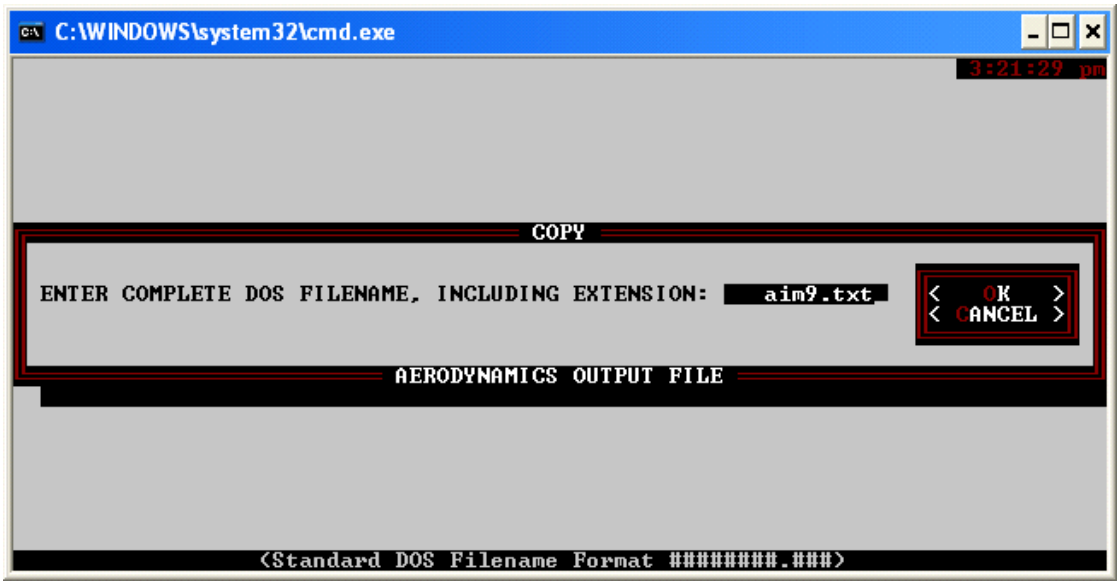

Figure 88. Export of data to text file.

THIS PAGE INTENTIONALLY LEFT BLANK

APPENDIX C

A. ANSYS-CFX AND EXPERIMENTAL RESULTS

	Mach 0.2							
AOA	**Ansys Cm**	**exp Cm**	**Ansys Cn**	**exp Cn**	**Ansys Cl**	**Exp Cl**	**Ansys Ca**	**exp Ca**
0	-0.0058	0.00	0.0157	0.0	0.0157	0.0	0.9727	0.90
2	-0.1270	-0.15	1.3255	1.3	1.2905	1.3	0.9791	0.90
4	-0.2755	-0.25	2.8968	2.9	2.8216	2.8	0.9766	0.90
6	-0.4711	-0.45	4.7434	4.8	4.6166	4.7	0.9643	0.89
8	-0.7084	-0.70	6.8145	6.9	6.6174	6.7	0.9399	0.87
10	-1.0049	-1.00	9.1262	9.1	8.8295	8.8	0.9103	0.84
12	-1.3471	-1.35	11.6135	11.6	11.1755	11.2	0.8860	0.81
14	-1.7034	-1.70	14.1435	14.2	13.5137	13.7	0.8668	0.78
16	-2.0807	-2.10	16.6923	17.0	15.8113	16.3	0.8503	0.74

Table 4. ANSYS-CFX results for Mach 0.2.

	Mach 0.8							
AOA	**Ansys Cm**	**exp Cm**	**Ansys Cn**	**exp Cn**	**Ansys Cl**	**Exp Cl**	**Ansys Ca**	**exp Ca**
0	-0.0016	0.00	0.0024	0.0	0.0024	0.0	1.0245	1.08
2	-0.1243	-0.08	1.3780	1.2	1.3414	1.0	1.0246	1.08
4	-0.2962	-0.18	3.0756	3.0	2.9964	2.8	1.0270	1.08
6	-0.5299	-0.40	5.1290	5.0	4.9938	4.8	1.0249	1.08
8	-0.8042	-0.68	7.4073	7.1	7.1948	6.8	1.0090	1.08
10	-1.1365	-1.03	9.9085	9.5	9.5864	9.2	0.9879	1.08
12	-1.5347	-1.43	12.6204	12.3	12.1423	11.7	0.9729	1.06
14	-1.9825	-1.88	15.4667	15.1	14.7723	14.2	0.9711	1.03
16	-2.4456	-2.33	18.3059	18.0	17.3252	16.7	0.9851	0.98

Table 5. ANSYS-CFX results for Mach 0.8.

	Mach 1.2							
AOA	**CM**	**exp Cm**	**Cn**	**exp Cn**	**Cl**	**Exp CL**	**Ca**	**exp Ca**
0	-0.0011	0.00	0.0026	0.0	0.0026	0.0	1.6360	1.67
2	-0.1575	-0.11	1.4846	1.3	1.4265	1.2	1.6391	1.67
4	-0.3909	-0.30	3.3169	3.1	3.1940	2.9	1.6453	1.68
6	-0.7186	-0.60	5.5162	5.3	5.3134	5.1	1.6513	1.71
8	-1.0983	-0.98	7.9213	7.7	7.6141	7.3	1.6531	1.72
10	-1.5243	-1.38	10.4587	10.2	10.0127	9.7	1.6535	1.73
12	-1.9760	-1.80	13.0619	12.9	12.4331	12.0	1.6515	1.71
14	-2.4451	-2.30	15.6967	15.5	14.8308	14.5	1.6518	1.70
16	-2.9724	-2.78	18.2165	18.2	17.0504	16.9	1.6704	1.67

Table 6. ANSYS-CFX results for Mach 1.2.

APPENDIX D

A. AP09 AND EXPERIMENTAL RESULTS

	Mach 0.2							
AOA	**AP09 Cm**	**exp Cm**	**AP09 Cn**	**exp Cn**	**AP09 Cl**	**Exp Cl**	**AP09 Ca**	**exp Ca**
0	0.000	0.00	0.001	0.0	0.001	0.0	0.762	0.90
2	-0.123	-0.15	1.511	1.3	1.483	1.3	0.764	0.90
4	-0.294	-0.25	3.235	2.9	3.174	2.8	0.761	0.90
6	-0.510	-0.45	5.153	4.8	5.046	4.7	0.751	0.89
8	-0.779	-0.70	7.242	6.9	7.068	6.7	0.737	0.87
10	-1.089	-1.00	9.48	9.1	9.211	8.8	0.719	0.84
12	-1.452	-1.35	11.85	11.6	11.446	11.2	0.697	0.81
14	-1.872	-1.70	14.304	14.2	13.717	13.7	0.672	0.78
16	-2.337	-2.10	16.858	17.0	16.027	16.3	0.645	0.74

Table 7. ANSYS-CFX results for Mach 0.2.

	Mach 0.8							
AOA	**AP09 Cm**	**exp Cm**	**AP09 Cn**	**exp Cn**	**AP09 Cl**	**Exp Cl**	**AP09 Ca**	**exp Ca**
0	0.000	0.00	0.001	0.0	0.001	0.0	0.960	1.08
2	-0.093	-0.08	1.485	1.2	1.45	1.0	0.966	1.08
4	-0.250	-0.18	3.261	3.0	3.186	2.8	0.966	1.08
6	-0.470	-0.40	5.283	5.0	5.153	4.8	0.962	1.08
8	-0.752	-0.68	7.479	7.1	7.273	6.8	0.953	1.08
10	-1.090	-1.03	9.887	9.5	9.574	9.2	0.941	1.08
12	-1.482	-1.43	12.475	12.3	12.01	11.7	0.925	1.06
14	-1.915	-1.88	15.167	15.1	14.497	14.2	0.906	1.03
16	-2.373	-2.33	17.851	18.0	16.916	16.7	0.885	0.98

Table 8. ANSYS-CFX results for Mach 0.8.

	Mach 1.2							
AOA	**AP09 Cm**	**exp Cm**	**AP09 Cn**	**exp Cn**	**AP09 Cl**	**Exp Cl**	**AP09 Ca**	**exp Ca**
0	0.000	0.00	0.001	0.0	0.001	0.0	1.635	1.67
2	-0.205	-0.11	1.736	1.3	1.678	1.2	1.643	1.67
4	-0.485	-0.30	3.785	3.1	3.661	2.9	1.647	1.68
6	-0.829	-0.60	6.063	5.3	5.858	5.1	1.648	1.71
8	-1.228	-0.98	8.5	7.7	8.189	7.3	1.645	1.72
10	-1.673	-1.38	11.118	10.2	10.665	9.7	1.638	1.73
12	-2.093	-1.80	13.638	12.9	13.001	12.0	1.629	1.71
14	-2.494	-2.30	16.16	15.5	15.289	14.5	1.617	1.70
16	-2.916	-2.78	18.609	18.2	17.446	16.9	1.602	1.67

Table 9. ANSYS-CFX results for Mach 1.2.

INITIAL DISTRIBUTION LIST

1. Defense Technical Information Center
   Ft. Belvoir, Virginia

2. Dudley Knox Library
   Naval Postgraduate School
   Monterey, California

3. Platzer, Maximilian
   Department of Mechanical and Aerospace Engineering
   Naval Postgraduate School
   Monterey, California

4. Hobson, Garth
   Department of Mechanical and Aerospace Engineering
   Naval Postgraduate School
   Monterey, California

5. Yeo Tat Soon, Director
   Temasek Defence Systems Institute
   Singapore

6. Tan Lai Poh, Manager
   Temasek Defence Systems Institute
   Singapore