Calhoun
Institutional Archive of the Naval Postgraduate School

Calhoun: The NPS Institutional Archive

DSpace Repository

Theses and Dissertations | 1. Thesis and Dissertation Collection, all items

1983-09

Experimental determination of the relative flow at the tip of a transonic axial compressor rotor

Cornell, David William

Monterey, California. Naval Postgraduate School

https://hdl.handle.net/10945/19803

This publication is a work of the U.S. Government as defined in Title 17, United States Code, Section 101. Copyright protection is not available for this work in the United States.

Downloaded from NPS Archive: Calhoun

http://www.nps.edu/library

Calhoun is the Naval Postgraduate School's public access digital repository for research materials and institutional publications created by the NPS community. Calhoun is named for Professor of Mathematics Guy K. Calhoun, NPS's first appointed -- and published -- scholarly author.

Dudley Knox Library / Naval Postgraduate School
411 Dyer Road / 1 University Circle
Monterey, California USA 93943

D
N
M[illegible]. [illegible]ORNIA 93943

NAVAL POSTGRADUATE SCHOOL
Monterey, California

THESIS

EXPERIMENTAL DETERMINATION
OF THE RELATIVE FLOW AT THE TIP
OF A TRANSONIC AXIAL COMPRESSOR ROTOR

by

David William Cornell

September 1983

Thesis Advisor: R. P. Shreeve

Approved for public release; distribution unlimited.

T215137

SECURITY CLASSIFICATION OF THIS PAGE (When Data Entered)

REPORT DOCUMENTATION PAGE

READ INSTRUCTIONS BEFORE COMPLETING FORM

1. REPORT NUMBER	2. GOVT ACCESSION NO. / 3. RECIPIENT'S CATALOG NUMBER
4. TITLE (and Subtitle): Experimental Determination of the Relative Flow at the Tip of a Transonic Axial Compressor Rotor	5. TYPE OF REPORT & PERIOD COVERED: Engineer's Thesis, September 1983 / 6. PERFORMING ORG. REPORT NUMBER
7. AUTHOR(s): David William Cornell	8. CONTRACT OR GRANT NUMBER(s)
9. PERFORMING ORGANIZATION NAME AND ADDRESS: Naval Postgraduate School, Monterey, California 93943	10. PROGRAM ELEMENT, PROJECT, TASK AREA & WORK UNIT NUMBERS
11. CONTROLLING OFFICE NAME AND ADDRESS: Naval Postgraduate School, Monterey, California 93943	12. REPORT DATE: September 1983 / 13. NUMBER OF PAGES: 223
14. MONITORING AGENCY NAME & ADDRESS (if different from Controlling Office)	15. SECURITY CLASS. (of this report): Unclassified / 15a. DECLASSIFICATION/DOWNGRADING SCHEDULE

16. DISTRIBUTION STATEMENT (of this Report)

Approved for public release; distribution unlimited.

17. DISTRIBUTION STATEMENT (of the abstract entered in Block 20, if different from Report)

18. SUPPLEMENTARY NOTES

19. KEY WORDS (Continue on reverse side if necessary and identify by block number)

synchronized sampling, transonic compressor, acquisition software, real time, cascade

20. ABSTRACT (Continue on reverse side if necessary and identify by block number)

The goal in the present work was to examine the flow through the tip section of a transonic compressor rotor in three different ways; (1) using high response instrumentation in the compressor itself, (2) using a blow-down wind tunnel model of the relative flow at the rotor tip, and (3) using a new computer analysis code. Toward that goal, the present study reports the results of extensive measurements made in the

DD FORM 1 JAN 73 1473 EDITION OF 1 NOV 65 IS OBSOLETE

S/N 0102-LF-014-6601

SECURITY CLASSIFICATION OF THIS PAGE (When Data Entered)

20. ABSTRACT Continued

compressor and the software developed to acquire and reduce high response transducer data. Modifications made to the cascade and first results of applying S. Eidelman's Godunov code to the compressor rotor tip section are also included. It was concluded that a valid comparison of computed and measured results required both an improvement of the compressor in-flow and an extension of the analysis code to include three dimensional effects.

Approved for public release; distribution unlimited.

Experimental Determination of the Relative Flow at the Tip of a Transonic Axial Compressor Rotor

by

David William Cornell
Lieutenant Commander, United States Navy
B.S., United States Naval Academy, 1973
M.S., Naval Postgraduate School, 1983

Submitted in partial fulfillment of the
requirements for the degree of

AERONAUTICAL ENGINEER

from the

NAVAL POSTGRADUATE SCHOOL
September 1983

[illegible]

ABSTRACT

The goal in the present work was to examine the flow through the tip section of a transonic compressor rotor in three different ways; (1) using high response instrumentation in the compressor itself, (2) using a blow-down wind tunnel model of the relative flow at the rotor tip, and (3) using a new computer analysis code. Toward that goal, the present study reports the results of extensive measurements made in the compressor and software developed to acquire and reduce high response transducer data. Modifications made to the cascade and first results of applying S. Eidelman's Godunov code to the compressor rotor tip section are also included. It was concluded that a valid comparison of computed and measured results required both an improvement of the compressor in-flow and an extension of the analysis code to include three dimensional effects.

TABLE OF CONTENTS

I. INTRODUCTION 10

II. TRANSONIC COMPRESSOR 13

A. COMPRESSOR DESCRIPTION 13

B. INSTRUMENTATION OF THE COMPRESSOR 14

C. SYNCHRONIZED SAMPLING 15

III. ACQUISITION SOFTWARE 18

A. ACQUISITION PROGRAM--WKAQN 18

B. REDUCTION AND INTERPOLATION OF DATA 21

IV. RESULTS AND DISCUSSION OF CASE-WALL PRESSURE ACQUISITION 24

A. TEST PROGRAMS AND RESULTS 24

B. PRESSURE CONTOURS 26

C. "BLADE" PRESSURE DISTRIBUTION 27

D. COMPARISON WITH CODE RESULTS 28

V. CONCLUSIONS AND RECOMMENDATIONS 31

APPENDIX A: ACQUISITION SOFTWARE 67

APPENDIX B: REDUCTION SOFTWARE 120

APPENDIX C: TRANSONIC CASCADE 133

APPENDIX D: DATA SET FOR 70% RPM, OPEN THROTTLE 163

LIST OF REFERENCES 220

INITIAL DISTRIBUTION LIST 223

LIST OF TABLES

I. Transducer Identification 33

II. Kulite CQL-080-25 Factory Specifications 34

III. HP9830/21 MX Data Acquisition Port/Channel Assignments 35

IV. Flow Conditions for Data Acquisition 36

V. Flow Parameters for Contour Maps 37

VI. Relative Conditions for Godunov Code Calculations . 38

LIST OF FIGURES

1. Transonic Compressor Test Rig 39
2. Transonic Compressor Stage 40
3. Transducer Locations 41
4. Transducer Signals 42
5. Paced Data Acquisition System Components 43
6. Pacer Input/Output Signals 44
7. Spacing of Kulite Array and Evened Array 45
8. Raw Kulite Data 46
9. Repeated Data Acquisition 49
10. Bi-stable Flow State 50
11. Bi-stable Jumps 51
12. Contour Map of Raw Data 52
13. Contour Map of Coefficients (Not Smoothed) 53
14. Smoothed Kulite Data 54
15. Contour Map of 70% Speed, Open Throttle 58
16. Contour Map of 70% Speed, Design Throttle 59
17. Contour Map of 70% Speed, Near-Surge 60
18. "Blade" Pressure Coefficients, 70%, Open 61
19. "Blade" Pressure Coefficients, 70%, Design 62
20. "Blade" Pressure Coefficients, 70%, Surge 63
21. Contour Using Godunov Code 64
22. "Blade" Pressure Comparison with Godunov Code 65
23. Recommended Data Acquisition Technique 66

LIST OF ABBREVIATIONS

Term	Description
A/D	Analog-to-digital convertor
ARRAYA	Array for unsteady pressure data
DMA	Direct Memory Access
DVM	Digital voltmeter
OLCAL	Array to store on-line calibration and steady state data
PLL	Phase-Locked Loop
TCR	Transonic compressor
TPL	Turbopropulsion Laboratory
TTL	Transistor-transistor logic

ACKNOWLEDGMENT

A study like this cannot be accomplished without the expertise and help of many people. I'd like to thank Glen Middleton and Don Harvey for machining the cascade parts, John Morris and Kelly Harris for keeping the compressor running, and Alan McGuire, who drew so many of the engineering drawings and helped me with most of the remaining.

Jim Hammer spent many hours explaining to me details and procedures, without which, I would still be wallowing in interfaces. His influence has been the stabilizing influence in a project with alot of turnover of personnel.

A special thanks is offered to Friedrich Neuhoff who helped me with the computer and to interpret the results as well as keeping me enthusiastic about my research.

Thanks to Professor Raymond Shreeve for giving me the slack-in-the reins to pursue the problem in my own way and for having the faith in me that the pursuit would yield productive results.

Finally, I'd like to thank my family for having to put up with fatherless evenings and weekends, and for supporting me throughout the project.

I. INTRODUCTION

The goal in the present work was to examine the flow through the tip section of a transonic compressor rotor in three different ways; (1) using high response instrumentation in the compressor itself, (2) using a blow-down wind tunnel model of the relative flow at the rotor tip, and (3) using a new computer analysis code. Toward that goal, the present study reports the results of extensive measurements made in the compressor and the software developed to acquire and reduce high response transducer data. Modifications made to the cascade and first results of applying S. Eidelman's Godunov code to the compressor rotor tip section are also included.

The work is part of the Airbreathing Propulsion Program sponsored by Naval Air Systems Command, Code 310. The Naval Postgraduate School (NPS) program has the objectives of (1) assessing transonic design and analysis methods, and (2) understanding three dimensional and unsteady flow. Experiments in the program make use of a single-stage transonic compressor and a blow-down transonic cascade model, both located at the NPS Turbopropulsion Laboratory (TPL).

In the present study, case wall pressures were obtained in the rotor reference frame by timing of the acquisition of data from fast response transducers, previously called

"synchronized sampling." [Ref. 1] Using this approach, steady flow with respect to the rotor can be investigated very well and its unsteadiness examined to some degree. The data was reduced to pressure coefficients and plotted on contours to enable the behavior of the flow field to be visualized. Data were obtained at compressor speeds from 50% to 70% of the design speed (30,460 RPM), each at three throttle settings. An initial analysis of the data is included herein.

The two dimensional transonic cascade model was designed and built several years ago. [Ref. 2] [Ref. 3] As part of the present work, a throttle valve was designed to adjust the back pressure of the flow through the cascade test section in order to produce conditions found in the compressor. Additionally, a plexiglass window was designed and built to enable Schlieren photography of the flow in the test section.

A two dimensional inviscid code, involving a solution of the Euler equations based on the Godunov method, was developed recently by S. Eidelman. [Ref. 4] The code was applied to the tip section flow and first results are presented.

The following section describes in detail the transonic compressor facility including the transonic compressor (TCR), instrumentation, and data acquisition system. Section III discusses the use of the acquisition software, reduction software, and interpolation schemes used in obtaining

pressure contours. The results of the case wall pressure investigation is discussed in Section IV with results of numerical modeling. Section V presents conclusions and recommendations for further steps necessary to complete this study.

The major contribution in the present work is considered to be the development of the software to successfully acquire, reduce, and present data from the compressor, and the data acquired. Appendix A provides a detailed description, flow diagram and listing of the primary FORTRAN programs used in acquisition of case wall pressure data. Appendix B contains description of the programs used in data reduction and contour plotting, the program listings and flow diagrams.

The modifications made to the transonic cascade model are presented in Appendix C, including the drawings of the new throttle valve and the window assembly.

II. TRANSONIC COMPRESSOR

A. COMPRESSOR DESCRIPTION

The transonic compressor is a single stage axial fan driven by a 1250 HP Allis-Chalmers multi-stage axial compressor air supply. The drive air is routed to a dual axial turbine which is connected to the transonic compressor drive shaft. (See Fig. 1) Air can be regulated to a balance piston housing with a labyrinth seal to adjust the thrust load on the compressor drive shaft.

The compressor is designed to operate at an RPM of 30460 and a tip relative mach number of 1.5. A throttle, filter, and flow nozzle in the inlet duct allows the flow rate to be adjusted and metered. At open throttle and design speed, the referred flow rate is 15.7 pounds per second with a relative flow angle at the tip of 65°. The design pressure ratio 1.5. [Ref. 5]

The rotor consists of an integral blade and disk assembly of machined aluminum. The rotor has eighteen single-circular-arc blades. The diameter of the case wall is 11.0 inches and the hub to tip ratio is 0.5 at the rotor face. [Ref. 1] The stator is free to rotate on flexures on which strain gages are mounted to measure the torque. A flow straightener is attached to the stator assembly to remove any remaining swirl from the flow so that stator and

rotor torques are balanced. The flow is exhausted through a radial diffuser to the atmosphere.

B. INSTRUMENTATION OF THE COMPRESSOR

Steady state data are acquired from fixed Kiel pressure and stagnation temperature probes mounted behind the stage. (See Fig. 2) Pressures and temperatures are also obtained from the flow nozzle installed upstream. Flow rate is obtained from prior calibration.

Pneumatic taps (23) are mounted in the case wall oriented axially from in front of the rotor to behind the stator. Twelve of the taps are colocated axially with Kulite CQL-080-25 fast-response semiconductor transducers. (See Fig. 3 and Table 1) The pneumatic pressures are read using a Scanivalve and an HG-78K Scanivalve Controller (U.S. Patent 4,383,300 [Ref. 6]), directed by acquisition software.

The Kulite transducers are spaced from 1.375 inches in front of the rotor to 0.375 inches behind the rotor. They are mounted in different circumferential positions to allow close axial spacing of relatively large diameter transducers mounts. (See Fig. 3) The manufacturer's specifications for the Kulite transducers are listed in Table II. The Kulites output a bridge voltage proportional to the difference of the pressure measured on the front face, which is flush with the compressor wall, and a reference pressure applied to the back of a diaphram. (See Fig. 4) From Table II, it can be

seen that the transducers have a natural frequency of 125 kHz allowing sampling rates of 25kHz without significant distortion. [Ref. 7]

The output voltage is routed to both a digital voltmeter (DVM) and to an analog-to-digital convertor. The HP-3455A DVM is used at a data sampling rate of 5Hz while the blade passing frequency is up to 9438 Hz at 100% RPM. Therefore, the DVM effectively measures the time averaged pressure from the Kulites. [Ref. 8]

The HP-5610 16-channel A/D converter operates at a maximum rate of 100,000 samples per second with an aperture window of 50 nanoseconds. [Ref. 9] Since the maximum sampling rate required for unsteady measurements is 508 samples per second at 30460 RPM (100%), the present A/D system is more than sufficient.

The A/D requires an input voltage between plus and minus one volt and outputs a ten bit digital word to the computer. This means that the A/D can only discern increments of 0.002 volts. The Kulite output with normal excitation is 0.0001 volts per inch of water differential pressure and thus the transducer voltage is boosted by Datel M201 amplifiers to obtain adequate resolution using the A/D converter.

C. SYNCHRONIZED SAMPLING

In order to obtain pressure data from known positions in the rotor frame, a controlled sampling procedure is used.

Samples are converted when the rotor is at the same relative location with respect to the separate transducers. This method of acquisition, by "Synchronized Sampling" [Ref. 1], is triggered by a signal produced at the compressor drive shaft. (Fig. 5) The trigger signal is produced by a light source passed through a hole in a timing disk which is mounted on the turbine end of the compressor drive shaft. (See Fig. 5) A photo diode senses the light and sends a pulse to the acquisition system on every revolution of the shaft. In addition, a second set of eighteen holes in the timing disk allows a one-per-blade signal to be generated by a second photo diode.

The two pulses are sent to a "Pacer" unit, (U.S. Patent 4,181,962 [Ref. 10]) where a wave shaper converts the signals to square waves, halves in frequency, and inputs to a Phased-Lock Loop (PLL) circuit. The PLL develops a signal of the same shape as the input but with a frequency 256 times as large. The result is a continuous sequence of 128 timing pulses per blade passage as shown in Figure 6.

A counting circuit in the Pacer counts the number of timing pulses that have occurred since the last one-per-rev signal which is used as a reset pulse and compares it to the delay word sent by the computer subroutine "WKPAC." When the two are the same, the Pacer sends out an encode pulse to the A/D convertor. A complete description of the pacer in

the current configuration and the software drivers to control it are given by McCarville. [Ref. 11]

The A/D converter is triggered by the encode pulse to convert the voltage sent by the Kulite transducer (via the amplifiers) to a ten bit digital value and pass it on to the computer.

The Hewlett-Packard 21MX Computer is used to control the entire acquisition process. The system is equivalent to an HP-1000 series machine, with 178 user programmable microinstructions and a 320 nanosecond ROM clock. [Ref. 12] A DMA feature allows data transfer to memory at a 100 kHz rate. [Ref. 13] Data storage is provided by an HP-7906 Disc Drive with a capability of storing 20.2 million 16-bit words on HP-12940A Disc Cartridges. [Ref. 14]

III. ACQUISITION SOFTWARE

A. ACQUISITION PROGRAM--WKAQN

Case wall pressure data were acquired using the FORTRAN program "WKAQN." The program was used to perform an on-line calibration of the Kulite transducers, acquire synchronized-sampled data of all twelve Kulites using the pacer, plot the raw data, perform a second on-line calibration, and store all the pressure and calibration data on the disk for future reduction. The program flowchart and listing can be found in Appendix A. A complete description of the use of the program can be found in NPS Technical Note 83-01. [Ref. 15]

The basic program is divided into sections so that the user may elect to omit portions of the procedure or modify specific routines. After the initial dimension statements and identification inputs, the on-line calibration is initiated.

The calibration of Kulite differential transducers is necessary to relate the voltage recorded by the computer to the precise value of the pressure sensed. Since the transducer response changes with its temperature, the calibration should be performed using the subroutine "WKOLC." The routine systematically calls the proper interface subroutines to retrieve the proper sequence of voltage data from the

different instruments. The functions "SCANR" and "ACQN" used in WKOLC are taken from R. N. Geopfarth. [Ref. 6]

The transducer operates by sensing the difference between a pneumatic reference pressure applied to the back side of a diaphram, and the unknown pressure of interest appearing on the front side. The differential pressure causes a strain in the silicon diaphram which is converted to an electrical signal using a strain gauge bridge circuit. The bridge output is sent to the A/D convertor or the digital voltmeter (DVM). If the pressure of interest was known, it could be plotted against the voltage recorded. This has been done with near linear results by Paige. [Ref. 7] In the transonic compressor, the pneumatic taps located at the same axial location as the Kulites can be used to measure the pneumatically averaged pressure at that case-wall location. It is an average because the frequency of blade passing does not allow enough time for the volume in the pneumatic lines and Scanivalve unit to adjust to the changes in pressure. To read the corresponding average pressures from the Kulites, the signals are sent to the DVM which has an integration period of .0166 seconds. This is much longer than the period of the rotor represented by a blade passing frequency of 9438 hz at design speed. Therefore the DVM will provide an average Kulite signal corresponding to an average pressure at that location. Since the average Kulite and corresponding pneumatic pressures are

the same, the absolute level of the Kulite transducer output can be established by equating the two.

For each Kulite transducer, a reference pressure is set and the Kulite data are read through the DVM and stored in array "OLCAL." A different reference pressure is then set and the process is repeated for up to six reference pressures. Six points for each Kulite then can be plotted on a voltage versus pressure plot. A linear curve fit is called in subroutine "CURFT" which uses the least-squares method of the approximation. The resulting slopes and intercepts from the equation generated are also stored in the original data array.

In addition to on-line calibration data, routine WKOLC also measures those data which do not need to be repeated for each acquisition loop. For example, since the flow conditions through the compressor should remain constant during wall-Kulite acquisition, the pressures and temperatures from steady-state instrumentation which are needed for reference conditions are read here. The data read during the first on-line calibration are read into the first row of array "OLCAL."

The acquisition loop is started. The program uses the subroutine "WKPAC" to gather the pressure data for one Kulite transducer through synchronized sampling across two blade passages ("one blade pair"). Each of 256 circumferential locations are sampled N-times. This volume of data is

too large to store, and therefore the average, maximum, minimum, and root-mean-square values of the N samples are calculated at each of the 256 locations and stored in the data array, "ARRAYA."

In order to verify the success of the acquisition, the average values are plotted using the "son" program WKPLT. A description of the father-son programming is available in the Hewlett-Packard RTE-IVB Programmer's Reference Manual. [Ref. 16]

When the last Kulite has been sampled, a second on-line calibration is called. The second calibration is compared to the first to ensure that the calibration was stable during the acquisition process, and that the values recorded are therefore accurate.

The data are stored in files on the disk of the system for later reduction.

B. REDUCTION AND INTERPOLATION OF DATA

For the tests reported herein, the voltage data acquired through the A/D converter were transferred to the central NPS IBM 3033AP Computer System in order to take advantage of the library of interpolation and graphing routines.

The Kulite data were reduced to pressure coefficients using the program WKCONCP. Since the Kulites are not evenly spaced axially, and since the values in the data array would be weighted evenly in a contour routine, a linear interpolation was made of the raw data to reduce distortion. (Fig.

3) The scheme generating this 16 x 256 array can be found in Appendix B.

Data smoothing was accomplished using a subroutine "ICSMOU" from the computer's technical library. [Ref. 17] The routine uses a cubic spline approximation to compare present with succeeding data points. If the point falls outside of a convergence criterion, the point is thrown out and a new point is generated. The result is a smoothed data set with spurious spikes removed.

Pressure coefficients were generated using the relationship:

$$Cp = P-Ps9 \;/\; Qs9 \qquad (3\text{-}1)$$

where P is the Kulite pressure, Ps9 is a freestream reference pressure, and Qs9 is a freestream dynamic pressure. Since an accelerating freestream exists into the rotor of the compressor, a reference condition was established by extrapolating undisturbed measured static (wall) pressure values in the inlet duct to the rotor leading edge by curve fitting. The detail of this procedure can be found in Appendix B. The dynamic reference pressure is obtained from perfect gas relationships and measured flow quantities of total pressure, static pressure, and total temperature. The equations are also given in Appendix B.

The pressure coefficients can be plotted as a three dimensional surface, or, as has been done here, as a contour map. The FORTRAN program WKCONPLT was used to read the

coefficient data and generate the contour vectors using a series of subroutines from an integrated software graphics library called "DISSPLA." [Ref. 18] This particular contour package was chosen since it offered several different smoothing techniques. The program listing is given in Appendix B.

IV. RESULTS AND DISCUSSION OF CASE-WALL PRESSURE ACQUISITION

A. TEST PROGRAM AND RESULTS

Tests were conducted first to verify the data acquisition procedures. Raw data were acquired using the program WKAQN from each Kulite transducer individually and plotted using program WKPLT to observe the waveform of the ensemble-average data. If the data appeared smooth, it was saved and the program sequenced to the next Kulite. If, however, the data contained spurious spikes, the measurement was repeated until a relatively smooth waveform was obtained. Figure 8 shows examples of recorded data.

The reliability of the acquisition procedure was of first concern, and was tested. The steady state conditions were first verified by use of the FORTRAN program TXCOO. [Ref. 19] The reliability of the acquisition was demonstrated by repeating measurements from the same Kulite at the same compressor run conditions. Figure 9 shows how precisely this data was repeatable. Two different Kulites were recorded, then both were repeated with near identical results.

After repeating what was apparently noisy data at one throttled condition, it was observed that the flow fluctuated between two quasi-steady states. Figure 10 shows the repeated measurements of the ensembled-averaged outputs at

the same compressor flow conditions (average) for Kulite 9.5. It can be seen that although the measurements were repeated eight times, the flow appeared to be in one or the other of two distinct states or in the process of transitioning between them. The phenomenon was observed as a result of the acquisition process which could measure from 1 to 99 data samples at each blade-to-blade location, and store the average before moving on to the next location. When the flow jumped to the alternate state, the next and subsequent data points (the average values of the number selected) showed the change. Figure 11 shows several jumps with the envelope of the two states superimposed. The jumps were observed not following any obvious pattern which suggested that the fluctuation was not periodical, though a more complete investigation is warranted.

The variation between blade pairs was also examined. A series of measurements was taken at a fixed operating condition, changing only the counts sent to the pacer. This allowed a sequential sampling of the blade pairs one to nine. It was observed that significant variations occurred from one blade passage to the next. The blade pairs with the most similar distributions were 4, 5, and 6, and these were therefore selected for the acquisition of complete data at varying speeds and flow rates.

Complete sets of unsteady data were acquired and stored for the fifteen run conditions listed in Table IV. The

conditions chosen representively cover the compressor map over a speed range of 50-70% of design RPM. Only the data obtained at 70% speed are presented and discussed in the following section. The data are stored on disc files named by a scheme described in Appendix A.2 and A.3.

B. PRESSURE CONTOURS

Figure 12 shows the voltage output of each transducer for an open throttle at 70% RPM. The data were interpolated to even the spacing between the rows of the array, and contours were generated as shown in Figure 13. It can be seen that very large distortions exist in the contour map, most noticably at the blades, and considerable noise.

Various smoothing techniques were attempted to remove the noise. The smoothing routines available to the DISSPLA graphics package were chosen due to the ease of usage. Rational splines, cubic splines, and polynomial interpolations were tried. Smoothing was tried in the axial columns alone, the circumferential rows, and in both directions. It was found that very little difference resulted from the use of different methods, but that more complicated smoothing techniques distorted the data so as to no longer represent the flow. Therefore, a cubic spline interpolation in the circumferential direction alone was chosen for the contour maps. Figure 14 shows the interpolated data after circumferential smoothing. Figures 15, 16 and 17 show the contours obtained for the data at 70% speed at open throttle,

design, and highly throttled conditions. The flow parameters used for calculation of the coefficients are given in Table V.

It is clear from Figures 15, 16, and 17, that the contours are not correct in the neighborhood of the blades, as was found similarly by Simmons. [Ref. 5] This has to do with rapid changes across the blades in the circumferential direction and sparse spacing of lines in the axial direction. The contours are interpolated across the blades in the axial direction, when in fact almost discontinuous changes occur everywhere along the blade.

C. "BLADE" PRESSURE DISTRIBUTIONS

Figure 18 shows the distribution of the maximum and minimum values of the pressure coefficient at each Kulite location. The location of the blade is also shown, and over this length, the maximum and minimum values occur at the blade pressure and suction surfaces respectively. The figure clearly illustrates the propagation of the unsteady effects forward of the leading edge. It is noted that values of Cp greater than zero occur far upstream of the blades because the undisturbed upstream pressure decreases to the rotor face as a result of the contraction in the flow path.

The effect of the throttle changes can be seen in the three figures. As the throttle is closed, the pressure rise

increases and the blade force inferred from the area between the maximum and minimum pressure lines, also increases.

D. COMPARISON WITH CODE RESULTS

Attempts were made to obtain a comparison of the measured pressure contours and "blade" pressure distribution with the results of numerical calculations using the Godunov code described in Reference 4. The attempts were unsuccessful, however the difficulties inherent in trying to obtain a valid comparison were identified.

The code was run twice by Dr. S. Eidelman, for the conditions at open throttle and 70% speed. The first run, with the air inlet angle specified to be $\beta_1=70°$, did not converge to a steady solution in 4000 iterations. Other similar cases had been demonstrated to converge in less than 2000 iterations. The incidence angle of 70° was inferred from probe measurements of inlet axial velocity near the case wall, and the wheel speed. While the air angle appeared to be impossibly large for the blade stagger angle ($\gamma\cong60°$), the probe measurements had been carefully verified.

The second run was made using conditions consistent with those used in computing pressure contours. These conditions are given in Table VI. It can be seen that by calculating an "undisturbed" static pressure at the rotor leading edge and using a measured stagnation pressure upstream, a larger value of axial Mach number and correspondingly smaller value

of air incidence angle (β_1=62.5°) were obtained. The results running the code with the conditions shown in Table VI are shown in Figure 21 and Figure 22. Clearly, from the blade surface distributions shown in Figure 22, there is no similarity at all in the results for the blade surface pressure. It is noted however that the code converged successfully and Figure 21 is considered to display a valid solution of the Euler Equations for the 2D relative transonic flow through the rotor tip section, with the boundary conditions specified in Table VI.

There are two considerations which make a comparison between measurement and computational results premature. First, the code is two-dimensional and can not accommodate streamline contraction, even if that contraction could be specified from measurements. It is noted that the results of the code are extremely sensitive to small changes in geometry and boundary conditions. Hence it will be sensitive also to changes in streamline contraction.

Second, the flow through the present rotor is anomalous. The incidence angles at the tip inferred from probe measurements are too high to be practical at transonic Mach numbers by usual cascade criteria. If the rotor is indeed operating in a flow approaching from such an extreme angle, then three dimensional effects must be present at the tip which would invalidate the comparison being attempted.

Clearly, a closer examination and possibly a correction of the flow into the tip section are required.

V. CONCLUSIONS AND RECOMMENDATIONS

1. The acquisition of Kulite data was verified to be repeatable but the results were clearly dependent on the blade pair selected. The number of samples averaged was shown not to be significant.
2. Smoothing of Kulite data to remove spikes before plotting as contours was shown to be effective, but more complicated routines distorted the measurements.
3. A special contour routine is needed to account for the physical boundary of the blades and uneven spacing of the sensors. Although some flow may cross the boundary at the blade tip, the gradients across the blade are close to discontinuities. Thus the contour routine must not allow interpolation across the blade boundary. It is recommended that data be taken in the future as shown in Figure 23. Using appropriate delays, data can be acquired in a format which can be input directly into contour plotting routines used for the code contours.
4. The data was transferred to the IBM 3033 by hand which was time consuming and prone to error. It is recommended that the contour routine be generated on the HP-21MX computer or that a tape interface be established to transfer the data to the IBM computer.

5. The computational method does not account for stream tube contraction and therefore could not properly represent the flow in the compressor. A more valid comparison can be made when streamline contraction and radius change effects are included in the code.
6. The transonic cascade, which more closely duplicates the code model, needs to be completed. Specific recommendations were presented in Appendix C.
7. The results indicated the direction needed in future investigations. The compressor runs were here limited to a 70% design speed due to the unusually high incidence angle indicated to be present on the rotor blade. The high incidence caused undesirably high loading on the blades and therefore, higher speeds were not attempted. A very steep contraction over the nose ("spinner") of the rotor to the rotor inlet may be causing a deficit in the axial velocity near the tip. If further examination shows this to be true, a redesigned inlet should be considered to correct the flow profile into the rotor blades.

Also, the bi-stable conditions encountered at throttled conditions should be investigated. It is uncertain whether the two states are created by a moving shock or transient stall condition. However, the inlet flow field should be carefully examined first to ensure that the blading is not being forced to operate in an unstable regime.

TABLE I

Transducer Identification

Pneumatic Port	Kulite Number	A/D Chnl	Axial Location
S1	-	-	Ref
S2	-	-	1.00
S3	-	-	2.00
S4	-	-	3.00
S5	-	-	3.50
S6	K6	2	4.00
S7	K7	3	4.50
S7.5	K7.5	4	4.81
S8	K8	5	5.00
S8.5	K8.5	6	5.18
S9	K9	7	5.37
S9.5	K9.5	8	5.56
S10	K10	9	5.75
S10.5	K10.5	10	5.93
S11	K11	11	6.12
S11.5	-	-	6.31
S12	K12	12	6.50
S13	K13	13	7.00

TABLE II

Kulite CQL-080-25 FACTORY SPECIFICATIONS

[Ref. 7]

Rated Pressure	25 psi
Max. Pressure	50 psi
Nominal Output (Rated Pressure)	75 mV
Bridge Excitation Voltage	5 V (7.5V max)
Bridge Impedence	750 Ω
Zero Balance	± 3% Full Scale
Combined Non-Linearity and Hysteresis	± 1.0% Full Scale
Repeatability	0.5%
Compensated Temperature Range	25-80° C
Change of Sensitivity with Temperature	± 2.5% / 100° F
Change of no-load Output with Temperature	± 2% / 100° F
Natural Frequency	125 KHz
g-Sensitivity	Perpendicular: 0.0003%FS/g Transverse: 0.00006%FS/g
Resolution	INFINITE

TABLE III

HP9830/21 MX Data Acquisition

Port/Channel Assignments

	S.V. #1	S.V. #4	SCANNER #1 ch		SCANNER #2 ch		SCANNER #2 ch	
1	(Tare) PA-PA	(Tare) PA-PA	0	Adv. S.V.#1	0	Ttl -Turb Noz	40	K6 DC Level
2	(Scale) Pcol-PA	(Scale) Pcal-PA	1	" S.V. 2	1	Tt Turb In	41	K7 "
3	Flow Noz P1-PA	Probe #1 P 1-PA	2	" S.V. 3	2	Tt Turb Out(L)	42	K7.5 "
4	Flow Noz P2-PA	Probe #1 P 23-PA	3	" S.V. 4	3	Tt Turb Out(R)	43	K8 "
5	Inlet Ptoo-PA	Probe #1 P 4-PA	4	" S.V. 5	4	TD Comp Noz	44	K8.5 "
6	Tip S 1 -PA	Probe #2 P 1-PA	5	Reset S.V.#1	5	Tw Comp Noz	45	K9 "
7	" S 2 -PA	Probe #2 P 23-PA	6	" S.V. 2	6	Tto Comp In	46	K9.5 "
8	" S 3 -PA	Probe #2 P 4-PA	7	" S.V. 3	7	TtA4 Out	47	K10 "
9	" S 4 -PA	Inlet P t-PA	8	" S.V. 4	8	TtBA Out	48	K10.5 "
10	" S 5 -PA	Inlet P s-PA	9	" S.V. 5	9	TtCA Out	49	K11 "
11	" S 6 -PA	Rake C 7-PA	10	P-ducer S.V.#1	10	Tcell	50	K12 "
12	" S 7 -PA	" A 1-PA	11	" S.V. 2	11		51	K13 "
13	" S 7.5-PA	" B 1-PA	12	" S.V. 3	12	ΔT Turb(L)	52	Probe "A" "
14	" S 8 -PA	" C 1-PA	13	" S.V. 4	13	ΔT Turb(R)	53	Probe "B" "
15	" S 8.5-PA	" A 2-PA	14	" S.V. 5	14	ΔT CompA4	54	
16	" S 9 -PA	" B 2-PA	15	RPM - AC	15	ΔT CompB4	55	
17	" S 9.5-PA	" C 2-PA	16	" - TTR	16	ΔT CompC4	56	
18	" S10 -PA	" A 3-PA	17	" - TCR	17		57	
19	" S10.5-PA	" B 3-PA	18	" - TTR	18	Tin Ref Probe	58	
20	" S11 -PA	" C 3-PA	19	1/Blade - TCR	19	ΔT Rotor Out	59	
21	" S11.5-PA	" A 4-PA	20		20		60	
22	" S12 -PA	" B 4-PA	21		21		61	
23	" S13 -PA	" C 4-PA	22		22		62	
24	" S14 -PA	" A 5-PA	23		23		63	
25	" S15 -PA	" B 5-PA	24		24		64	
26	" S16 -PA	" C 5-PA	25	P Baro in Hg	25		65	
27	" S17 -PA	" A 6-PA	26	Comp Noz P1	26		66	
28	" S18 -PA	" B 6-PA	27	Comp Noz ΔP	27		67	
29	" S19 -PA	" C 6-PA	28	Turb Noz P1	28		68	
30	Hub H 1 -PA	" A 7-PA	29	Turb Noz ΔP	29		69	
31	" H 2 -PA	Diff D S1-PA	30	Probe #1 Pos	30		70	
32	" H 3 -PA	" D S2-PA	31	Probe #1 Yaw	31		71	
33	" H 4 -PA	" D S3-PA	32	Probe #2 Pos	32		72	
34	" H 5 -PA	" D S4-PA	33	Probe #2 Yaw	33		73	
35	" H 6 -PA	" D S5-PA	34	Probe KA Pos	34		74	
36	" H 7 -PA	-PA	35	Probe KA Yaw	35		75	
37	" H 8 -PA	-PA	36	Probe KB Pos	36		76	
38	" H 9 -PA	Turb P t1-PA	37	Probe KB Yaw	37		77	
39	" H10 -PA	" P1(L)-PA	38	Comp Torque	38		78	
40	Diff Exit Dt1 -PA	" P1(R)-PA	39	"K" Ref Press	39		79	
41	" " Dt2 -PA	" P2(L)-PA						
42	" " Dt3 -PA	" P2(R)-PA						
43	" " Dt4 -PA	" P3(L)-PA						
44	" " Dt5 -PA	" P3(R)-PA						
45	" " Dt6 -PA	" Pt3(L)-PA						
46	" " Dt7 -PA	" Pt3(R)-PA						
47	" " Dt8 -PA	" Brg Lube -PA						
48	" " Dt9 -PA	C.Thrust Bal -PA						

TPL 4/01/81
JH

TABLE IV

Flow Conditions for Data Acquisition

Test Condition	RPM	Referred Flow Rate	PR
Open Throttle			
50%	15250	10.5	1.114
60%	18250	12.4	1.168
63%	19150	13.1	1.187
67%	20190	13.8	1.210
70%	21216	14.6	1.235
Design Throttle			
50%	15160	9.9	1.124
60%	18255	12.1	1.186
63%	19200	12.7	1.209
67%	20160	13.4	1.233
70%	21100	14.1	1.262
Near Surge Throttle			
50%	15330	9.2	1.148
60%	18200	10.7	1.222
63%	19200	11.3	1.250
67%	20170	12.0	1.280
70%	21130	12.7	1.310

TABLE V

Flow Parameters for Contour Maps

Run 145	70% Open Throttle
PT	389.74 in. H_2O
TT	292.3 °K
Ps9	331.59 in. H_2O
U	313.35 in. H_2O
MW	1.0536
Qs9	258.05 in. H_2O
Ms9	0.4857

Run 143	70% Design Throttle
PT	343.91 in. H_2O
TT	294.21 °K
Ps9	335.34 in. H_2O
U	308.67 in. H_2O
MW	1.0335
Qs9	251.10 in. H_2O
Ms9	0.4661

Run 144	70% Near Surge Throttle
PT	344.16 in. H_2O
TT	294.23 °K
Ps9	306.14 in. H_2O
U	309.11 in. H_2O
MW	1.0011
Qs9	215.56 in. H_2O
Ms9	0.4117

TABLE VI

Relative Conditions for Godunov Code Calculations

* P2 = 0.9623 atmos. (391.49 in. H_2O)

P1 = 0.815 atmos. (331.59 in. H_2O)

T1 = 284.5 °K

* M1 = 1.054

* $\beta 1$ = 62.5°

* Pt1 = 1.6448 atmos.

* Tt1 = 347.7 °K

* Denotes boundary conditions required to be input.

COMPRESSOR TEST
RIG

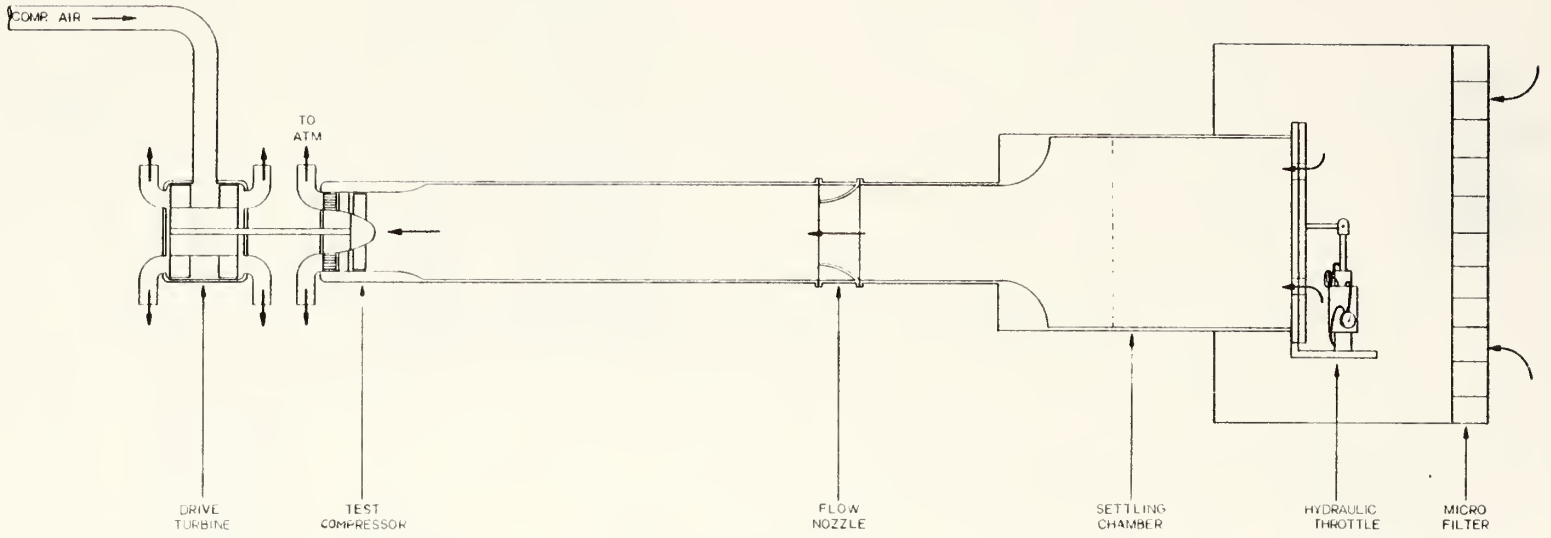

Figure 1 Transonic Compressor Test Rig

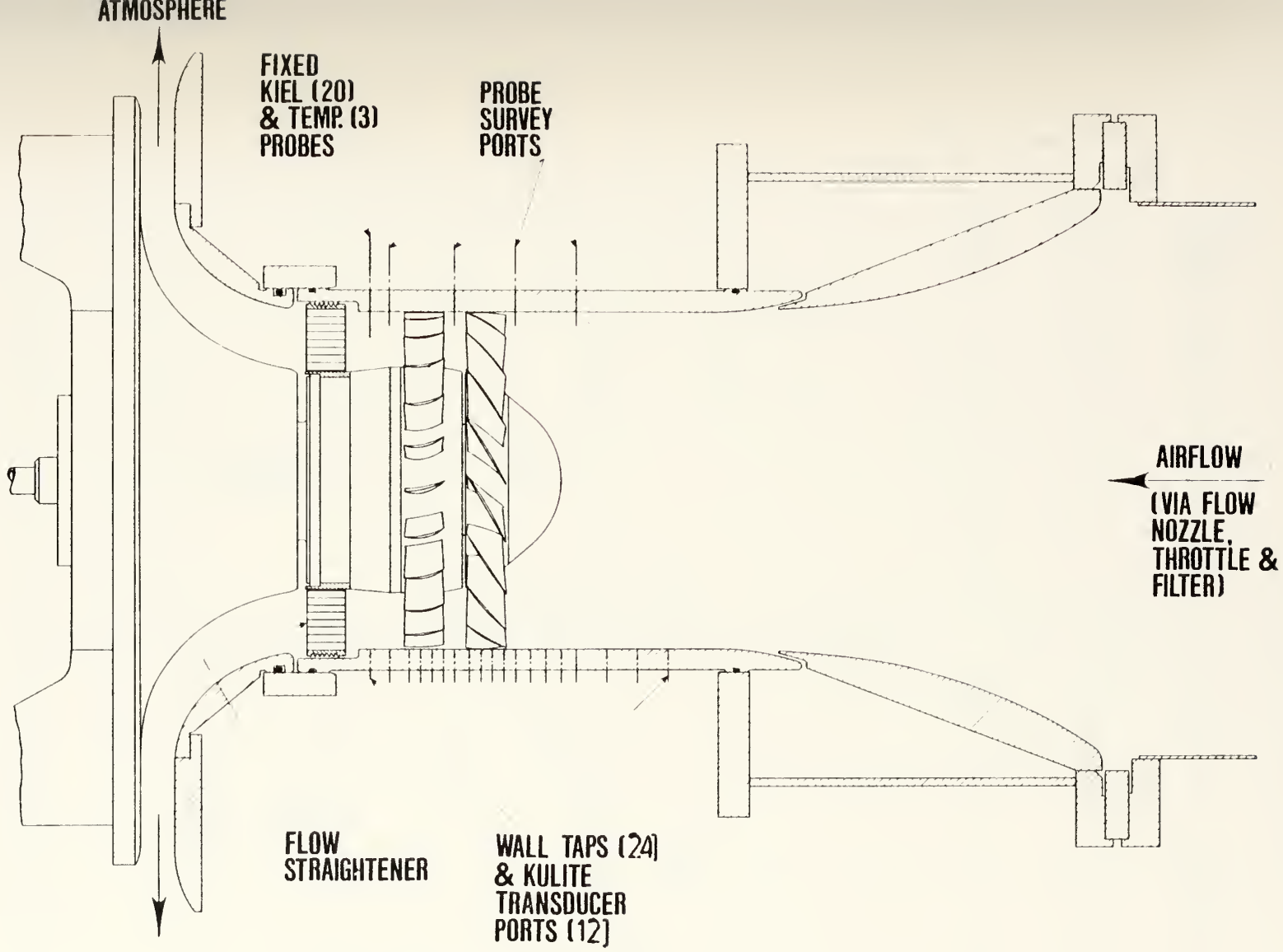

Figure 2 Transonic Compressor Stage

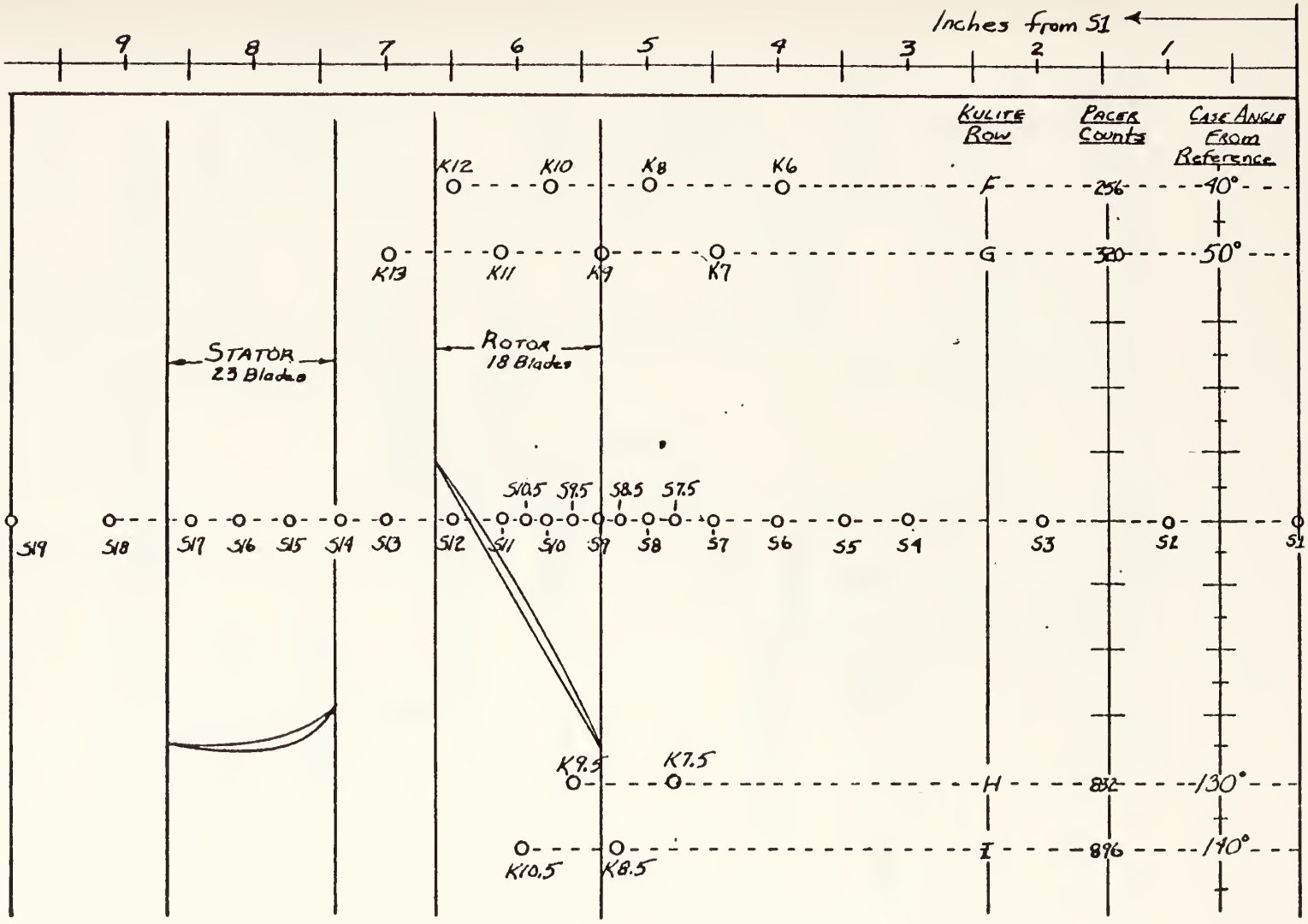

Figure 3 Transducer Locations

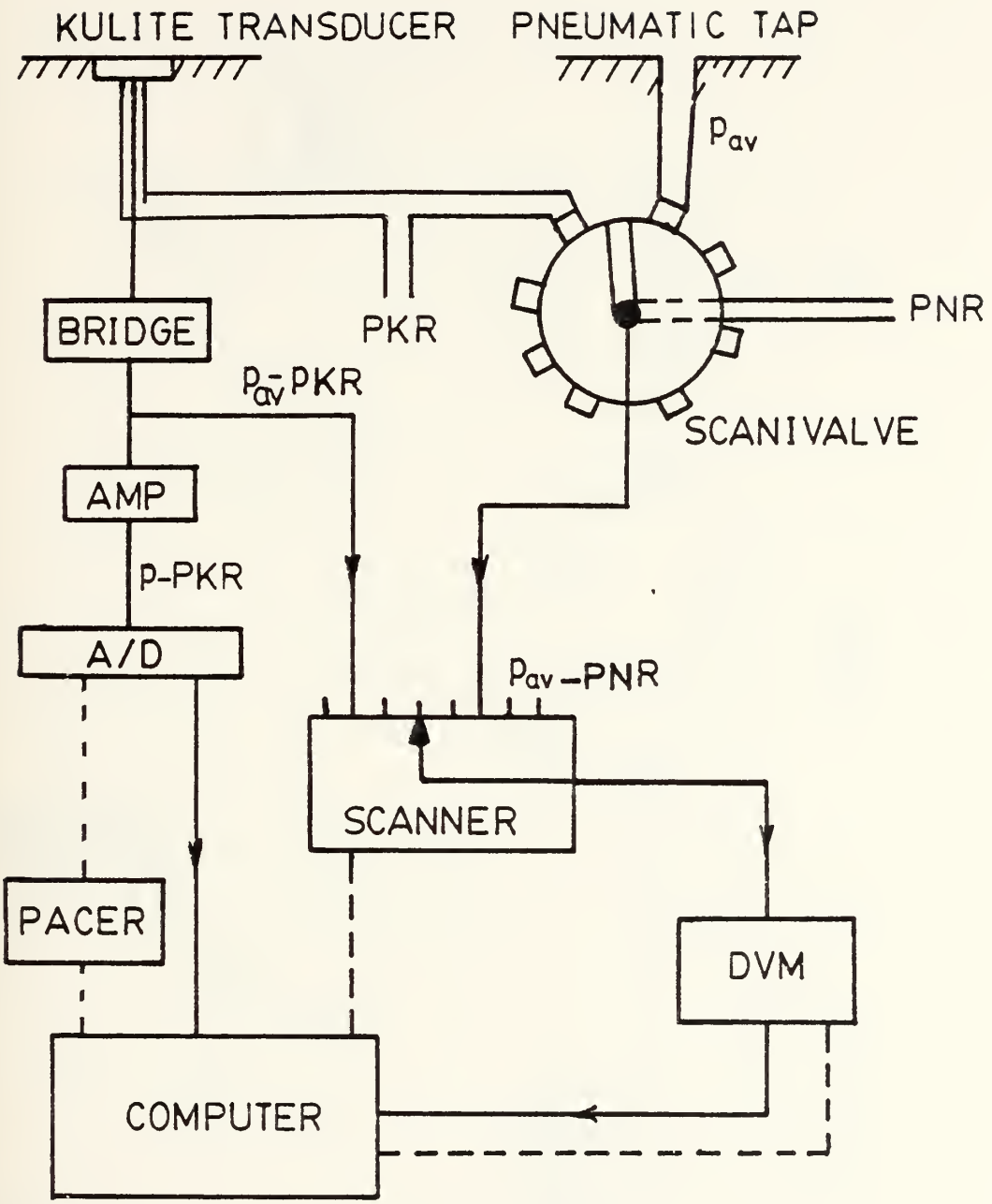

Figure 4 Transducer Signals

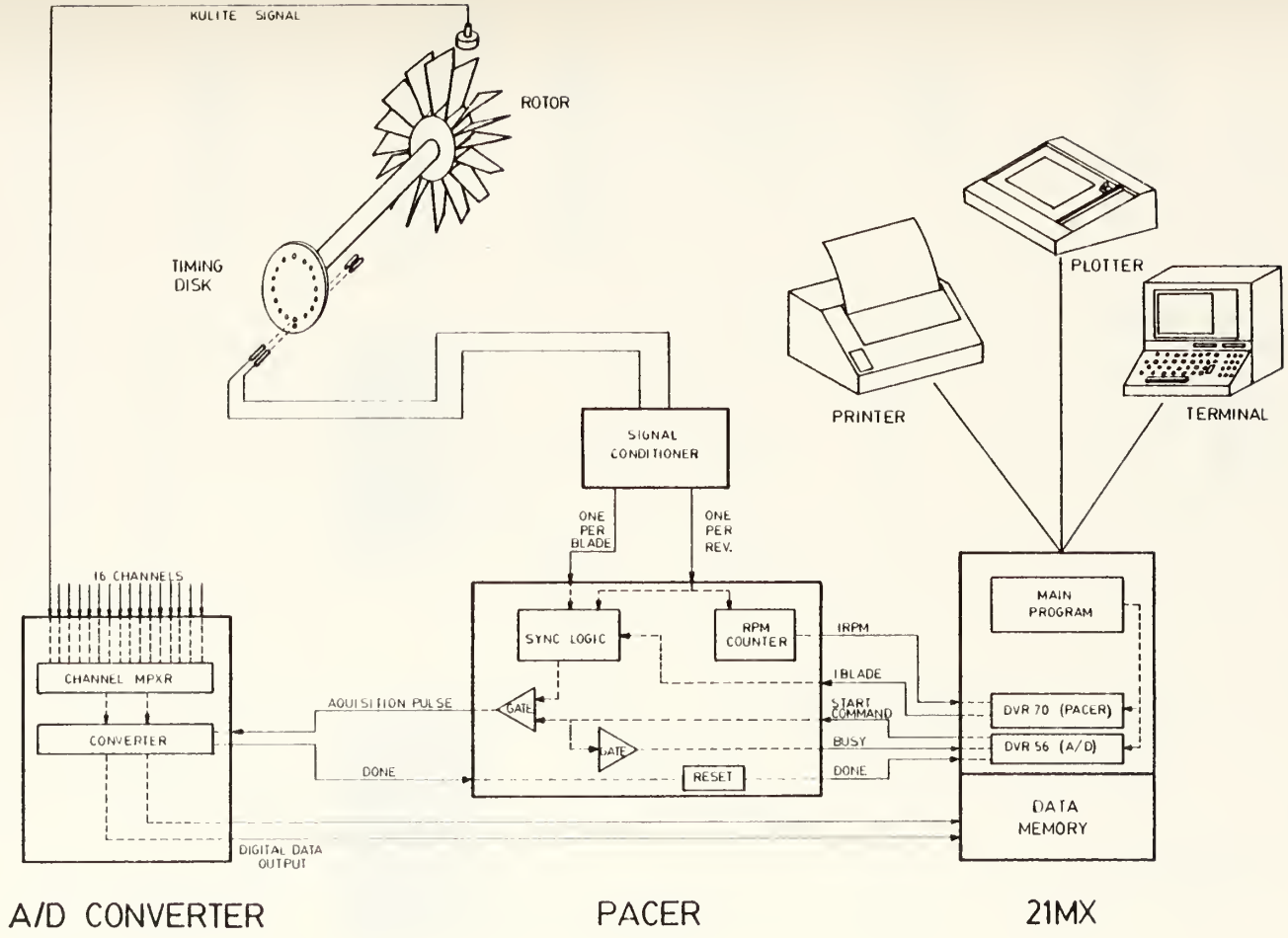

Figure 5 Paced Data Acquisition System Components

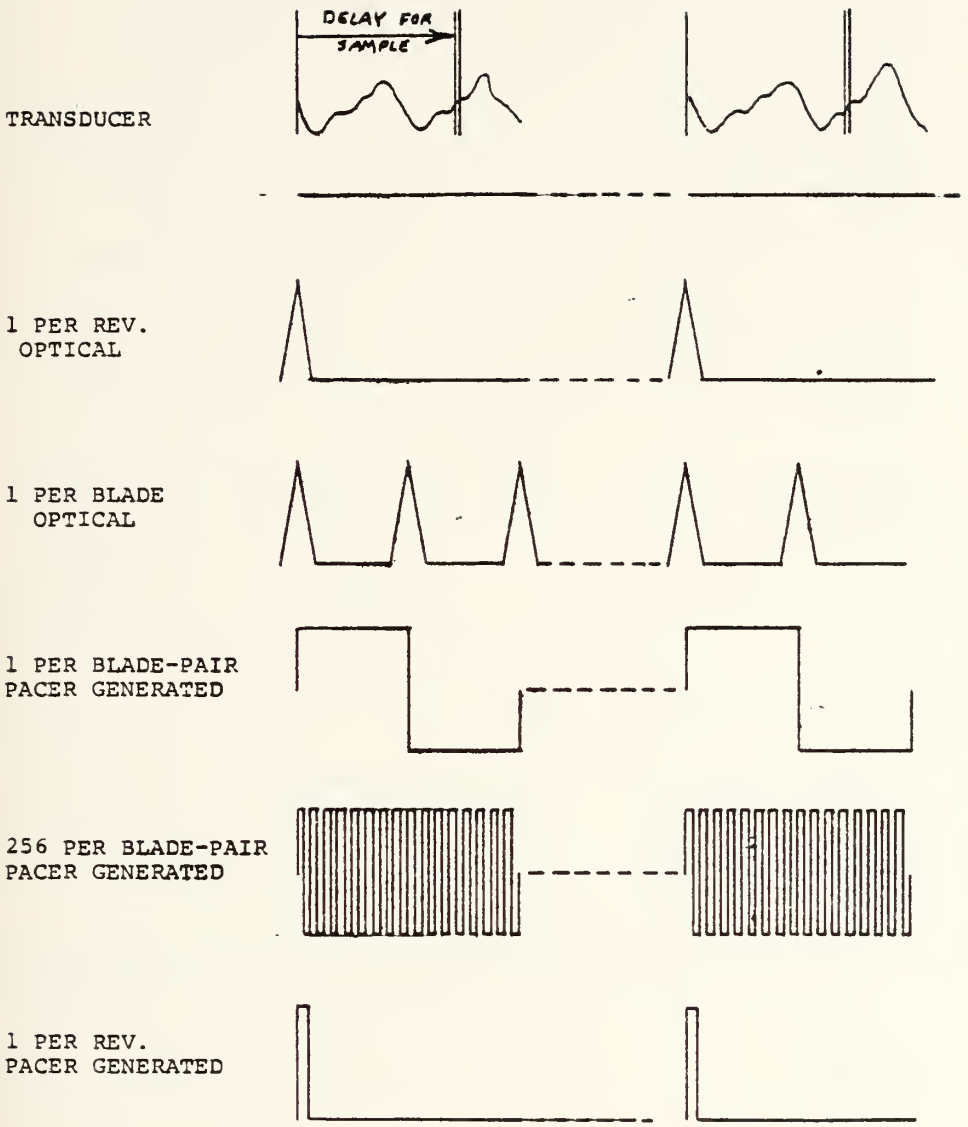

Figure 6 Pacer Input/Output Signals

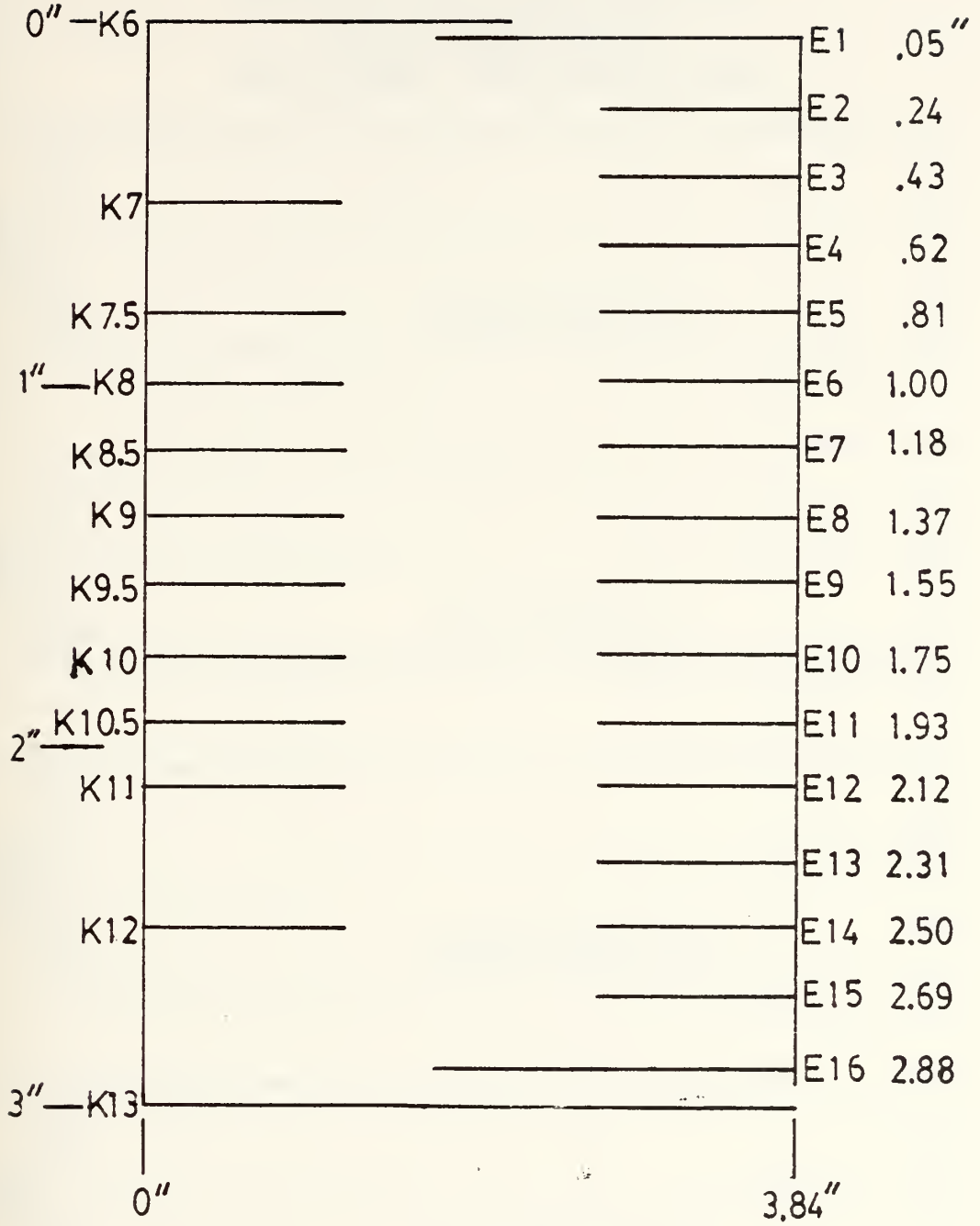

Figure 7 Spacing of Kulite Array and Evened Array

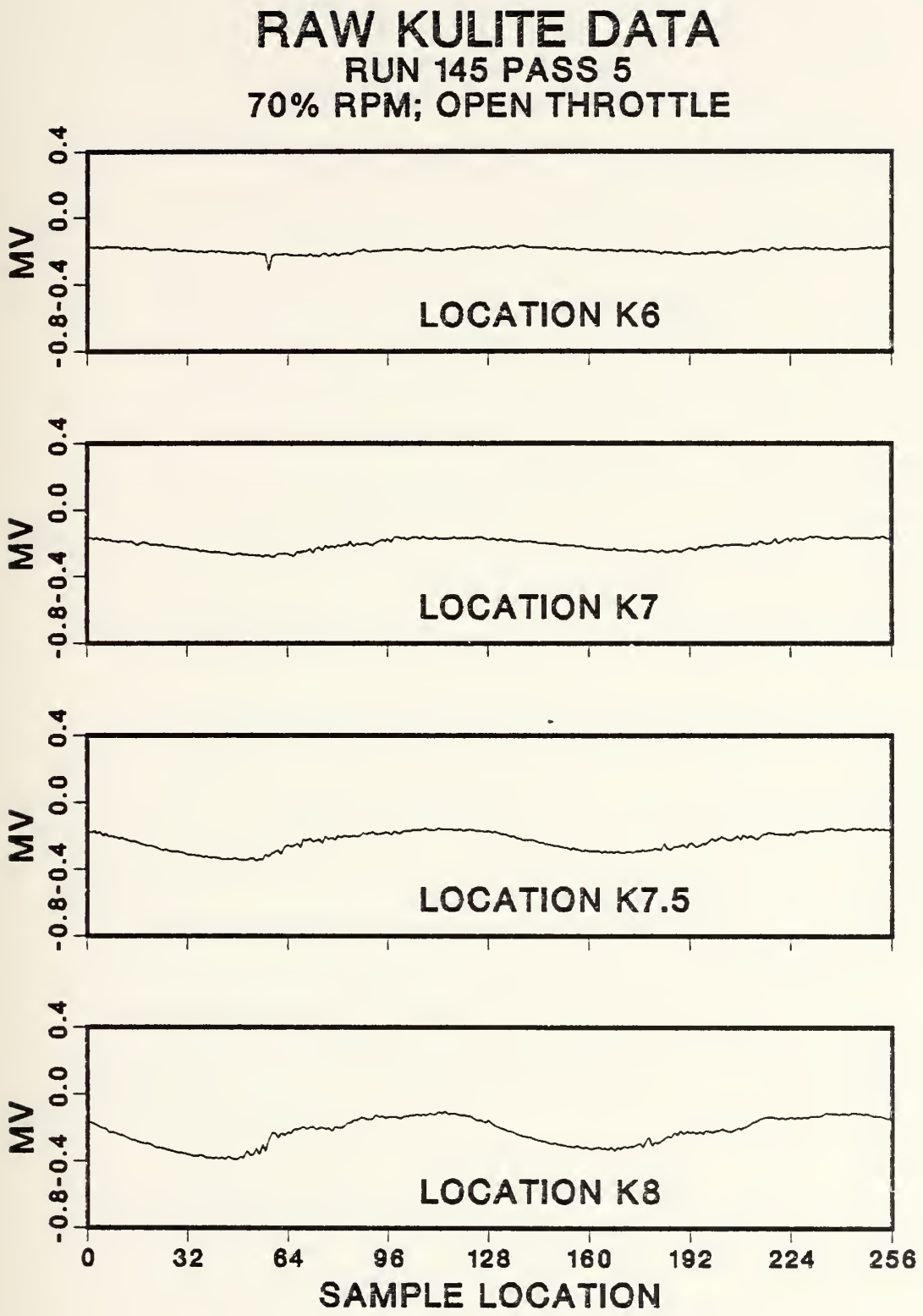

Figure 8 Raw Kulite Data (Continued)

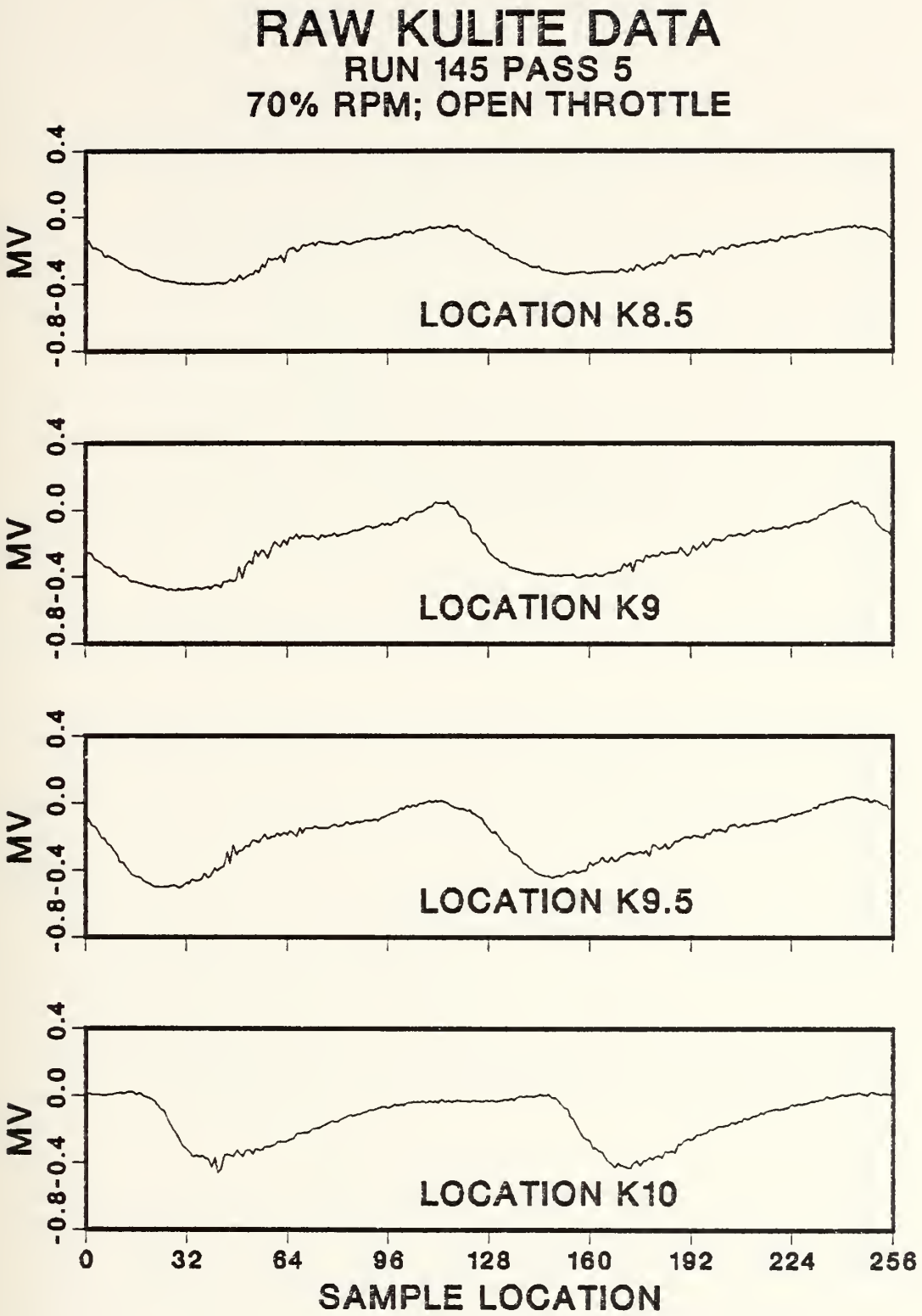

Figure 8 (Continued)

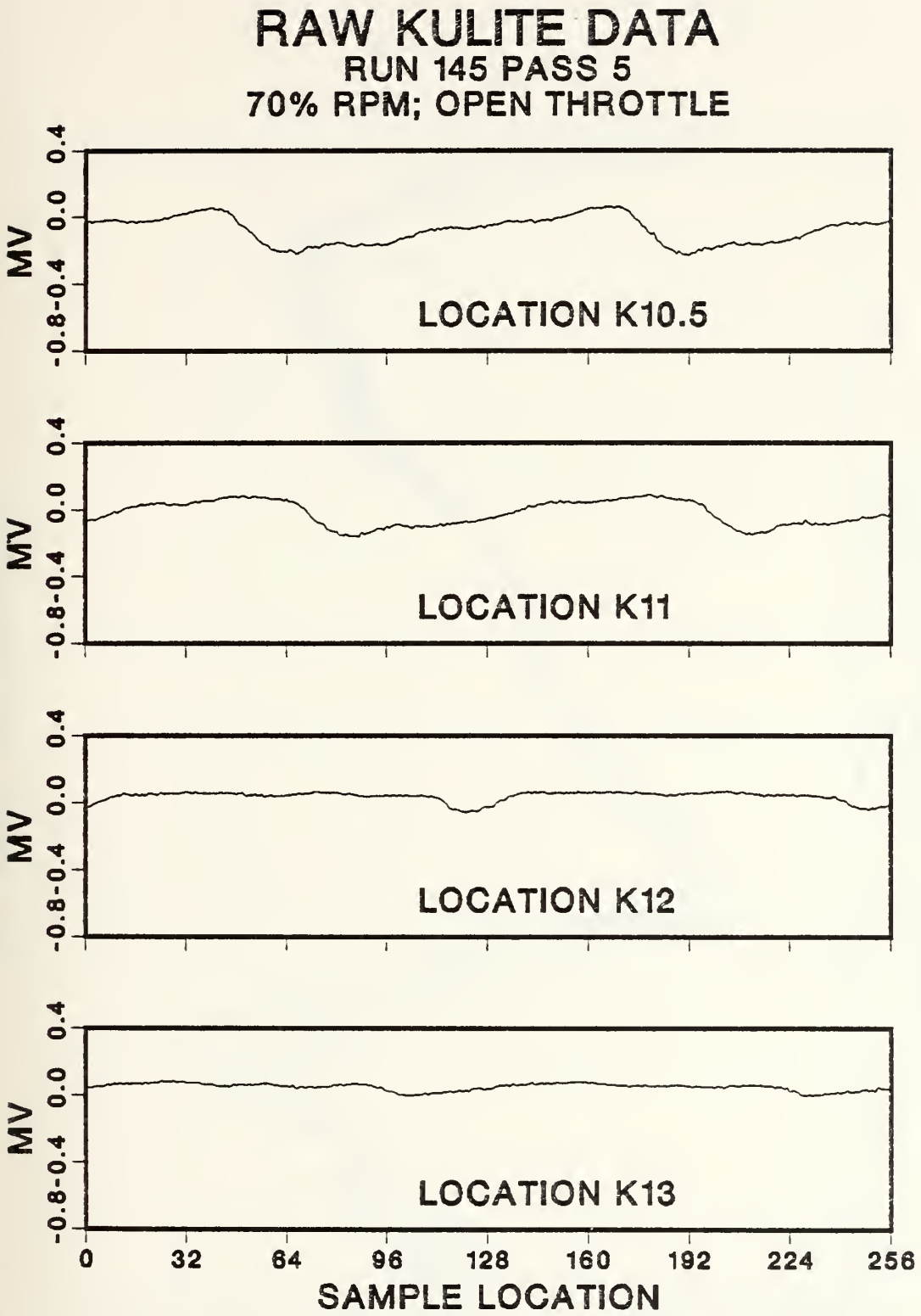

Figure 8 (Continued)

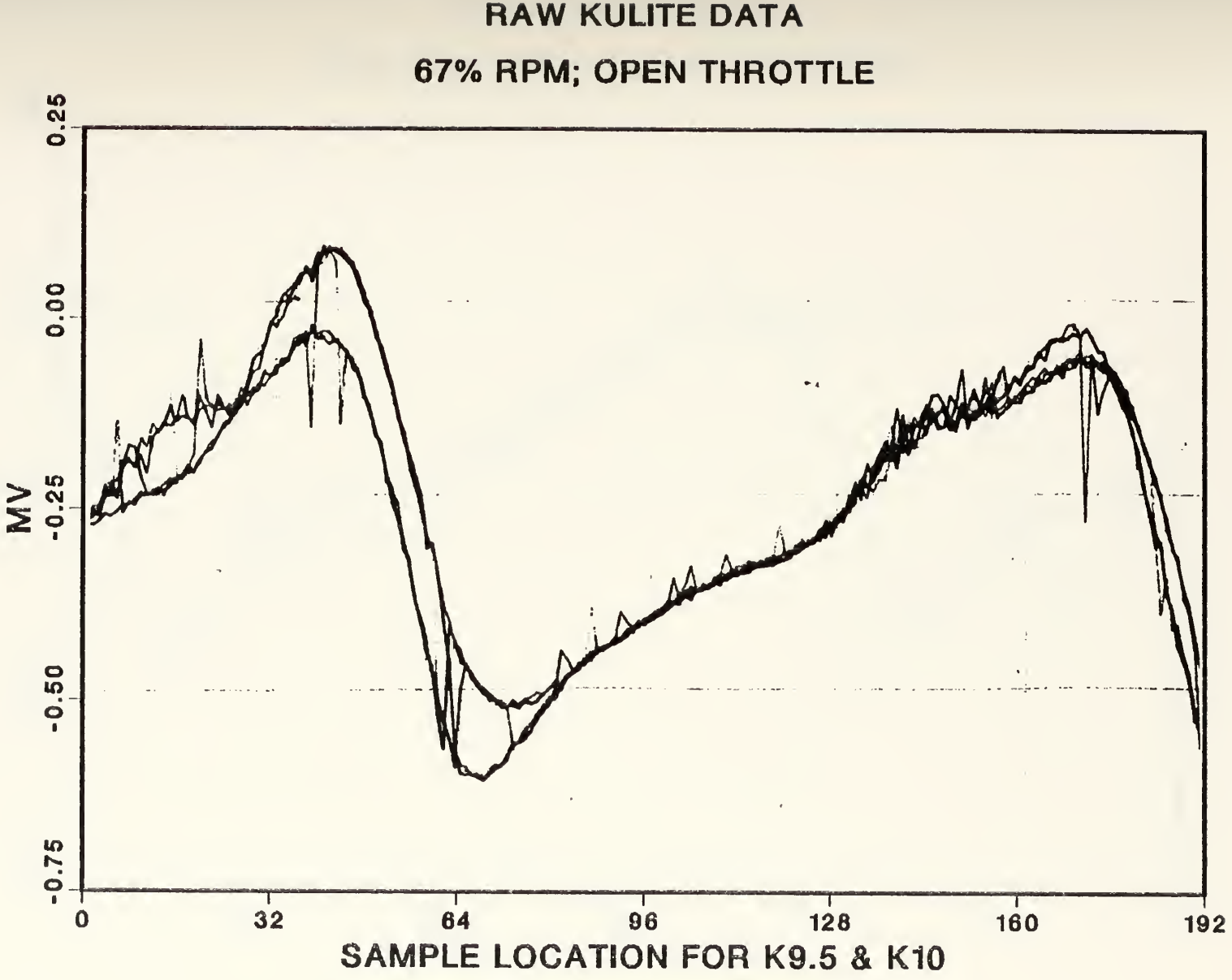

Figure 9 Repeated Data Acquisition

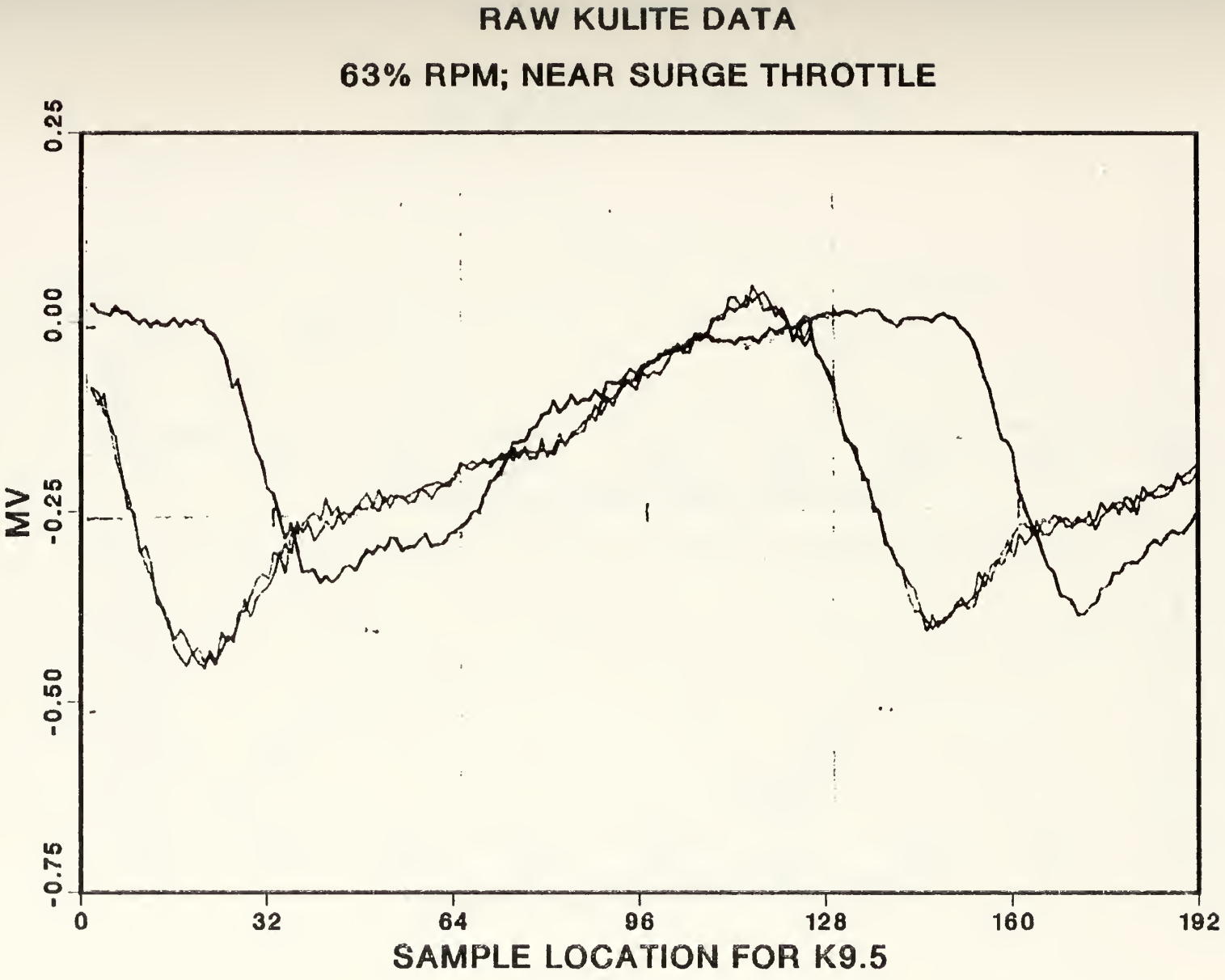

Figure 10 Bi-stable Flow State

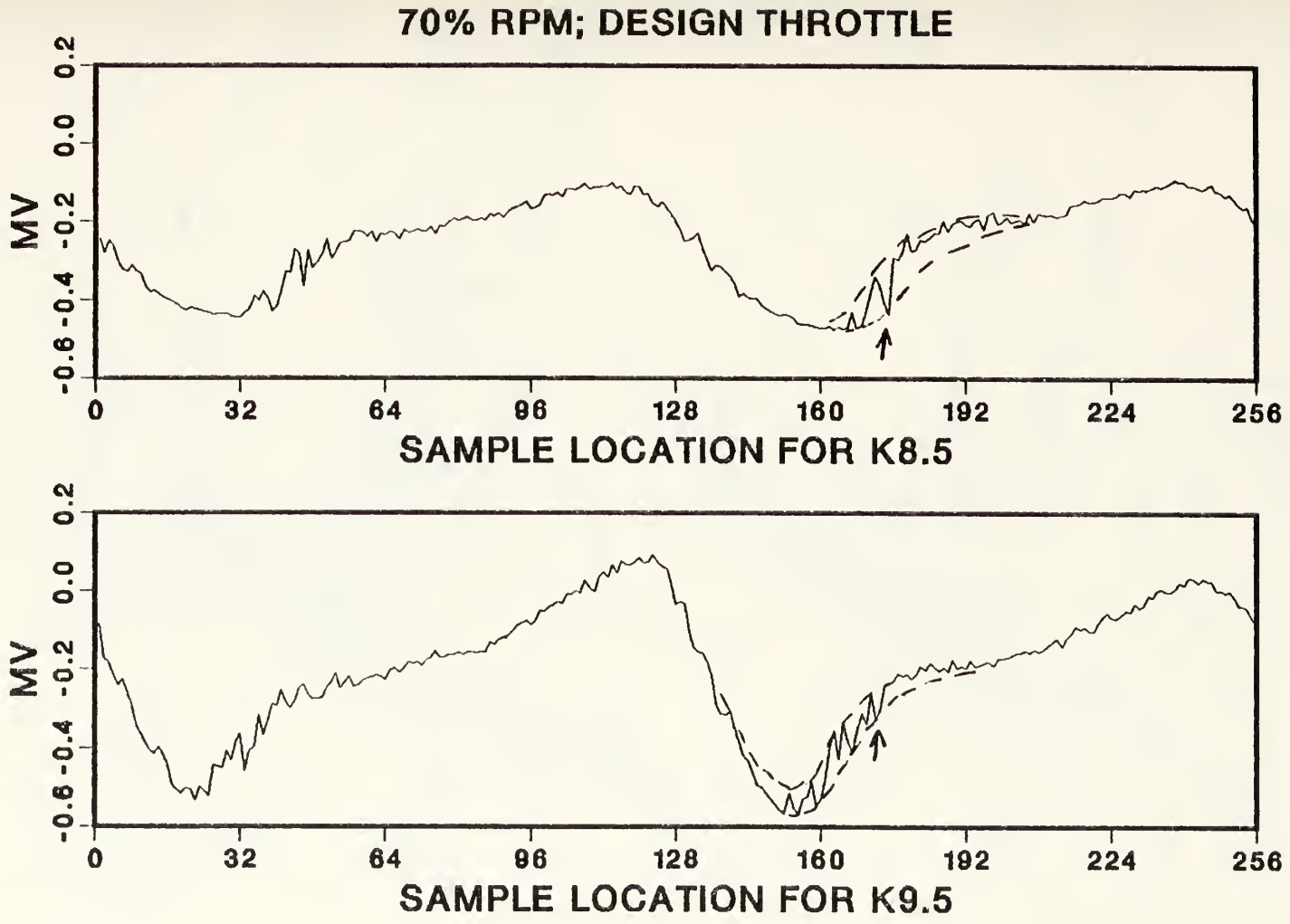

Figure 11 Bi-stable Jumps

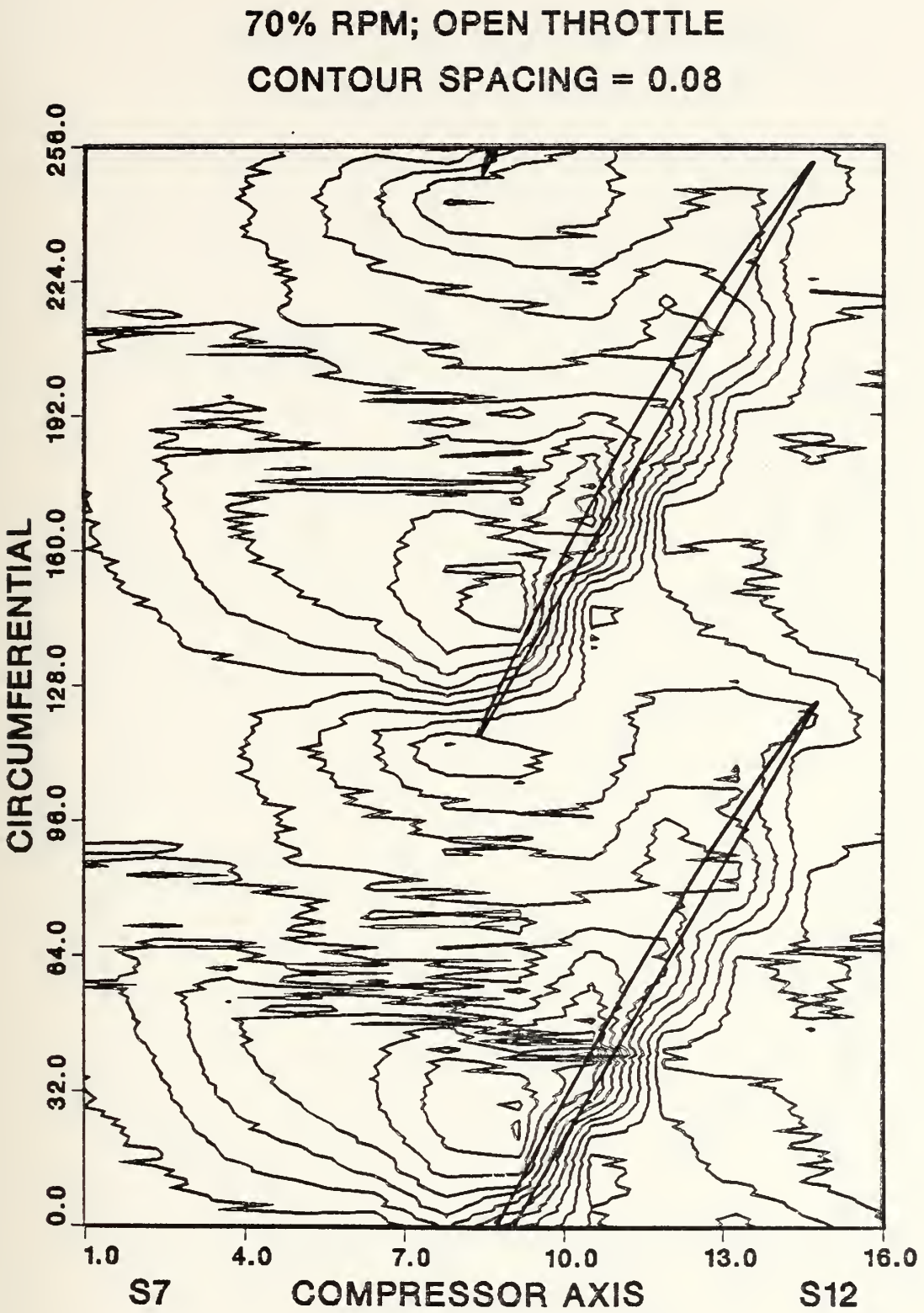

Figure 12 Contour Map of Raw Data

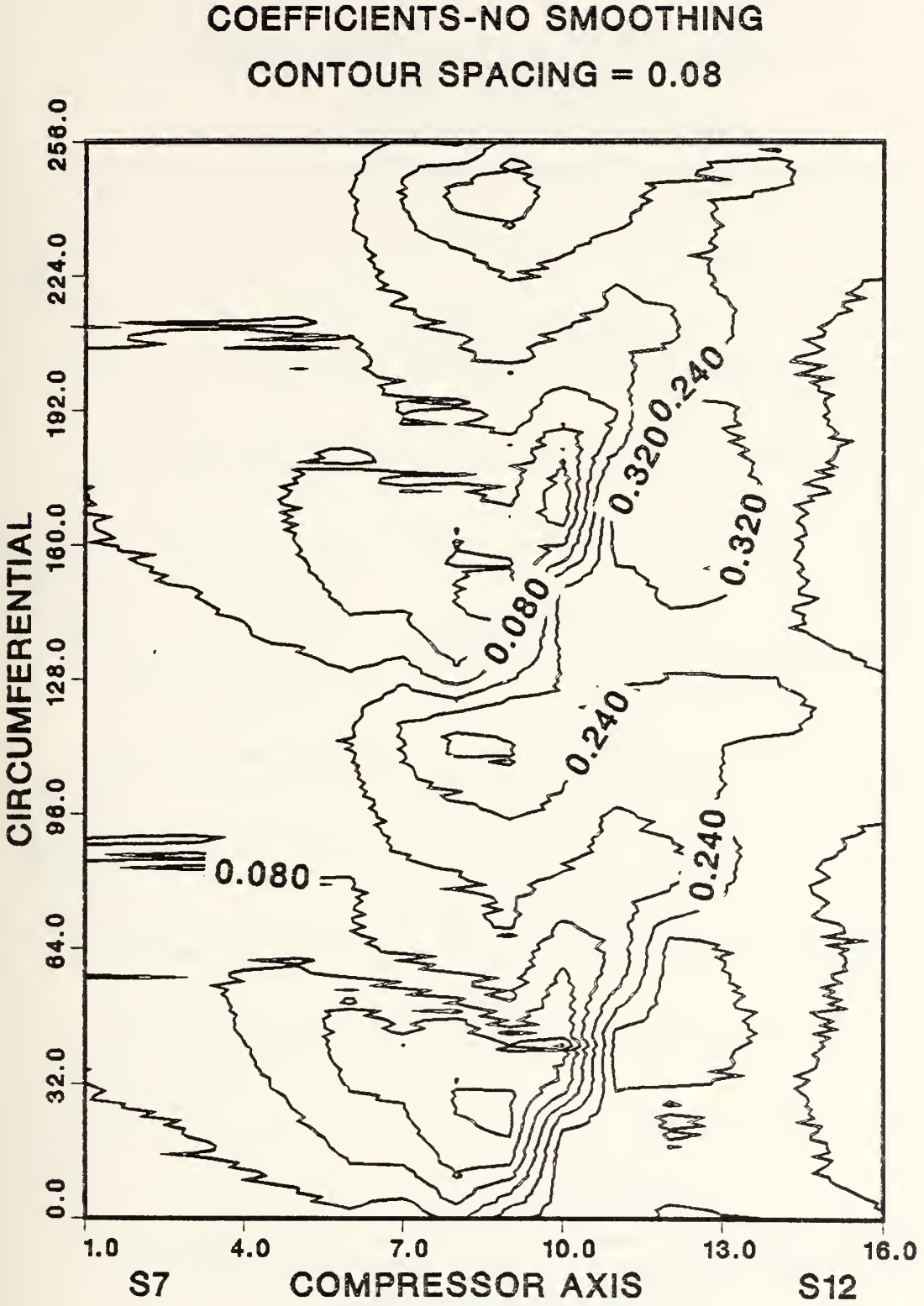

Figure 13 Contour Map of Coefficients (Not Smoothed)

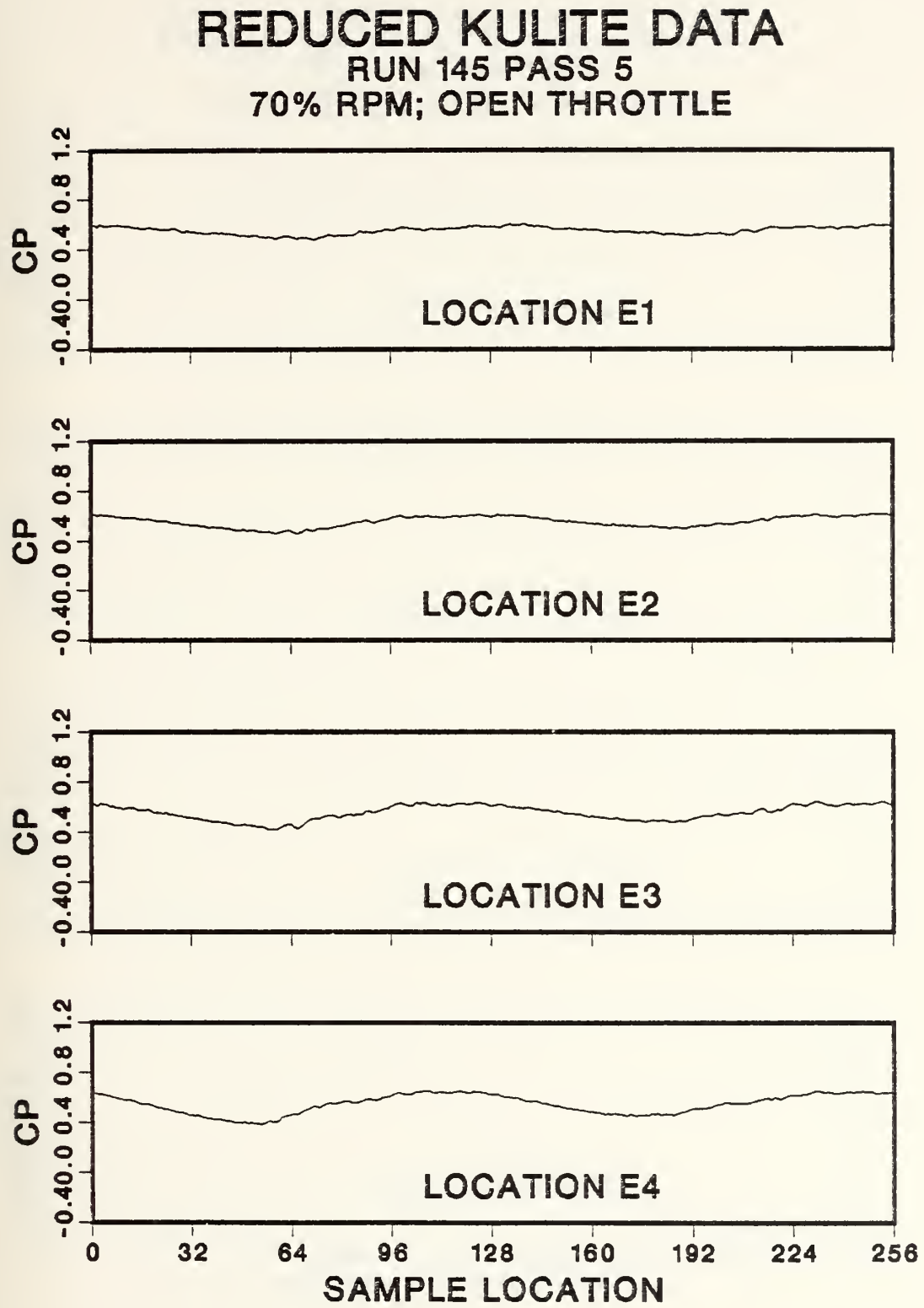

Figure 14 Smoothed Kulite Data (Continued)

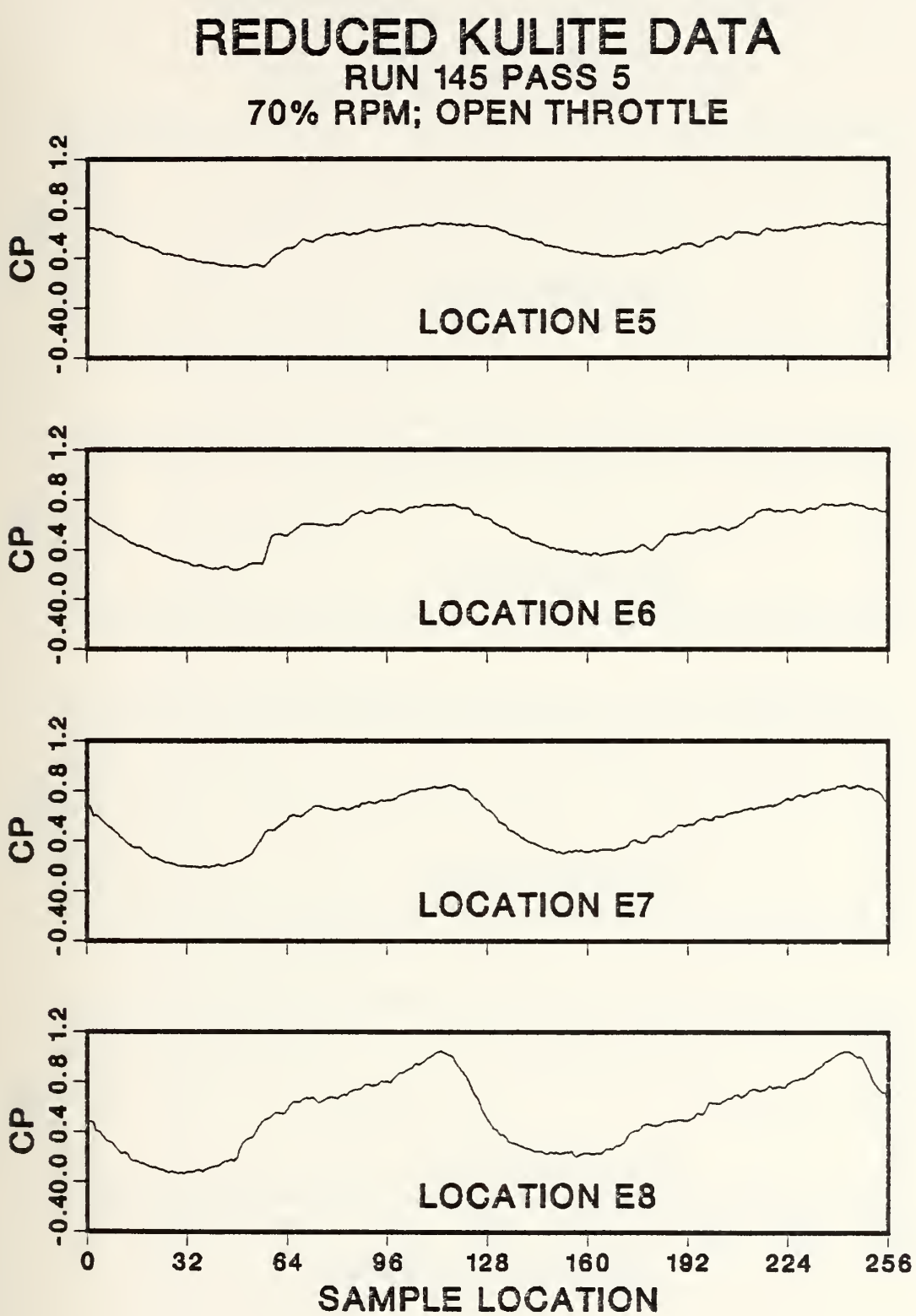

Figure 14 (Continued)

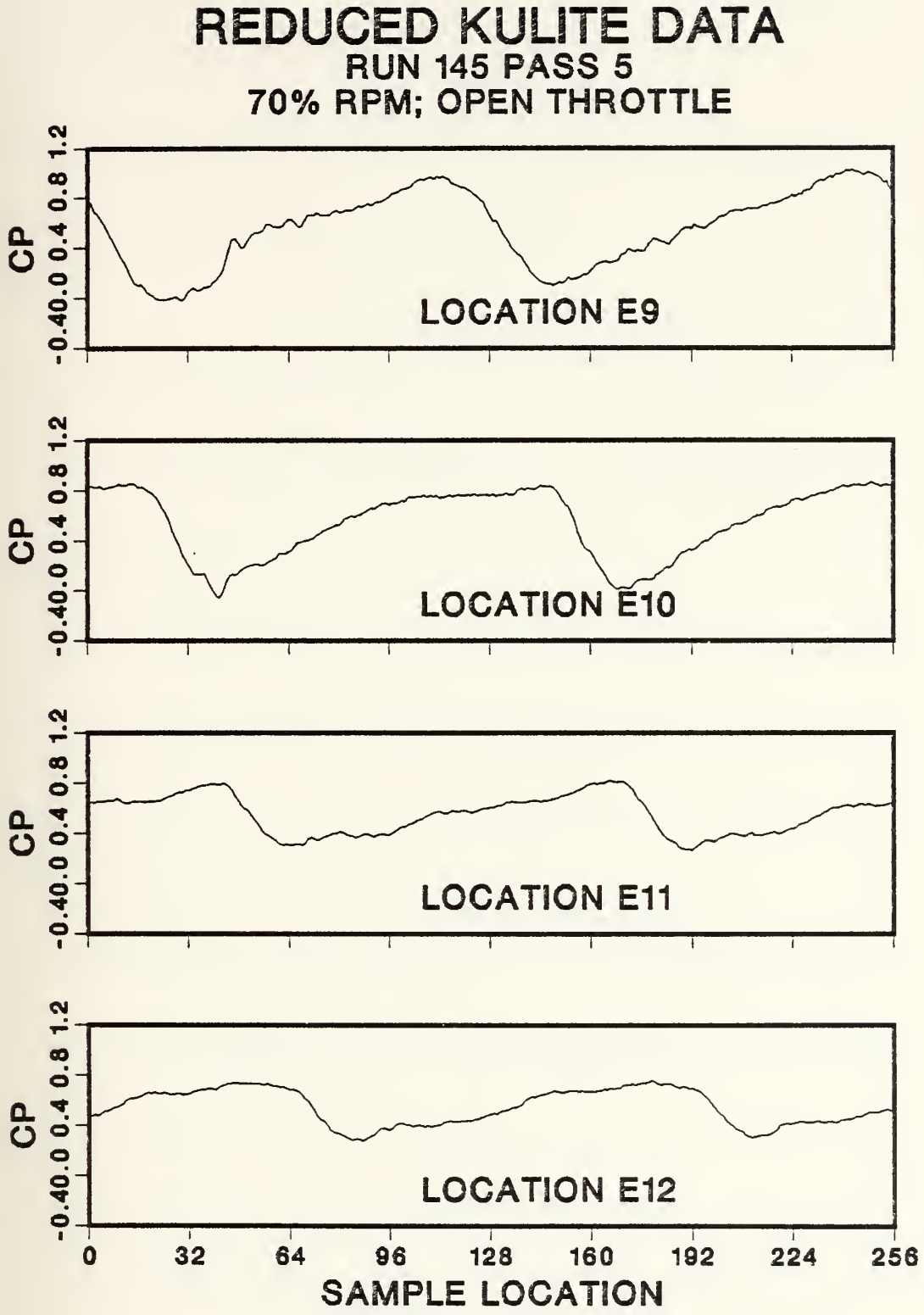

Figure 14 (Continued)

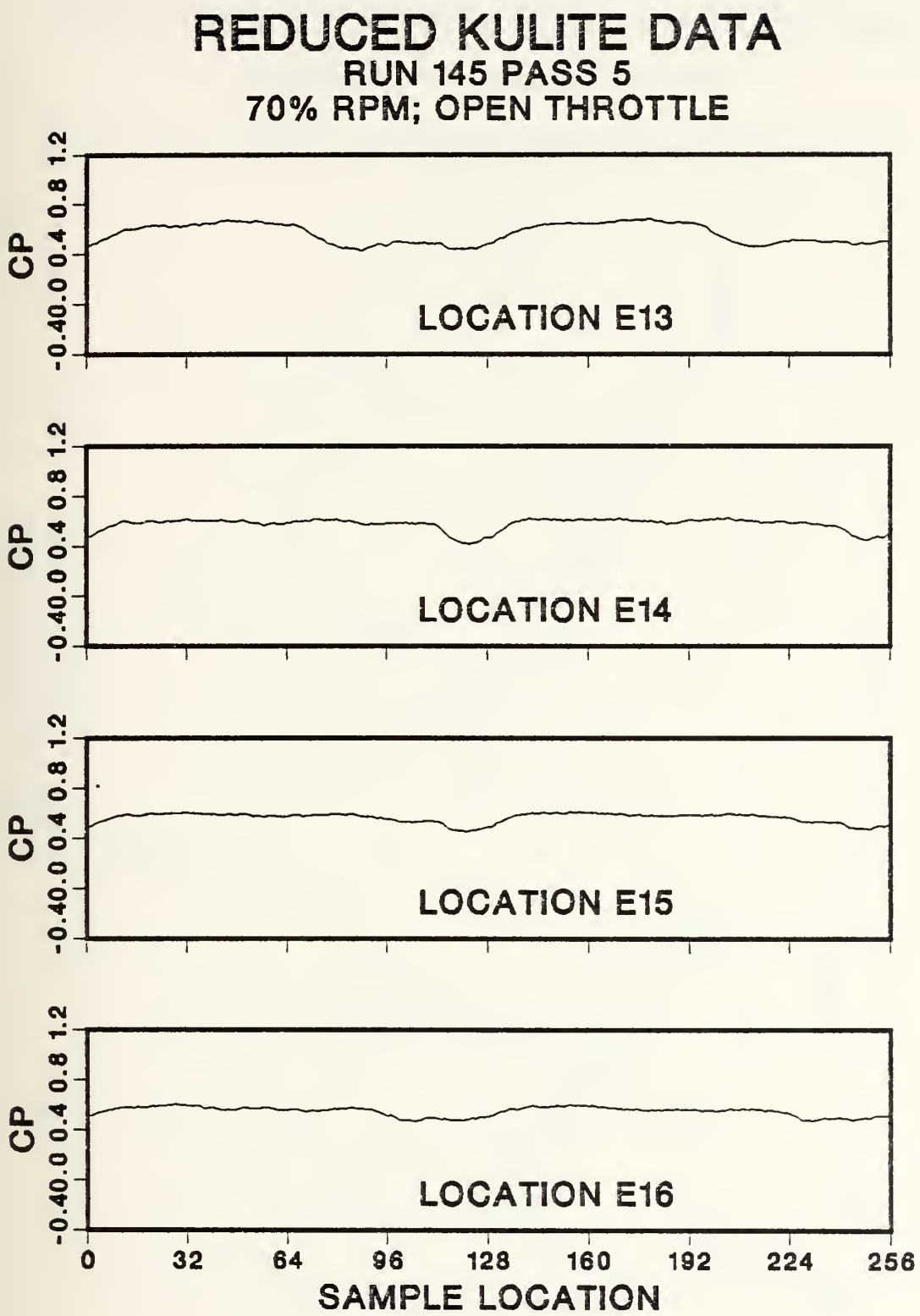

Figure 14 (Continued)

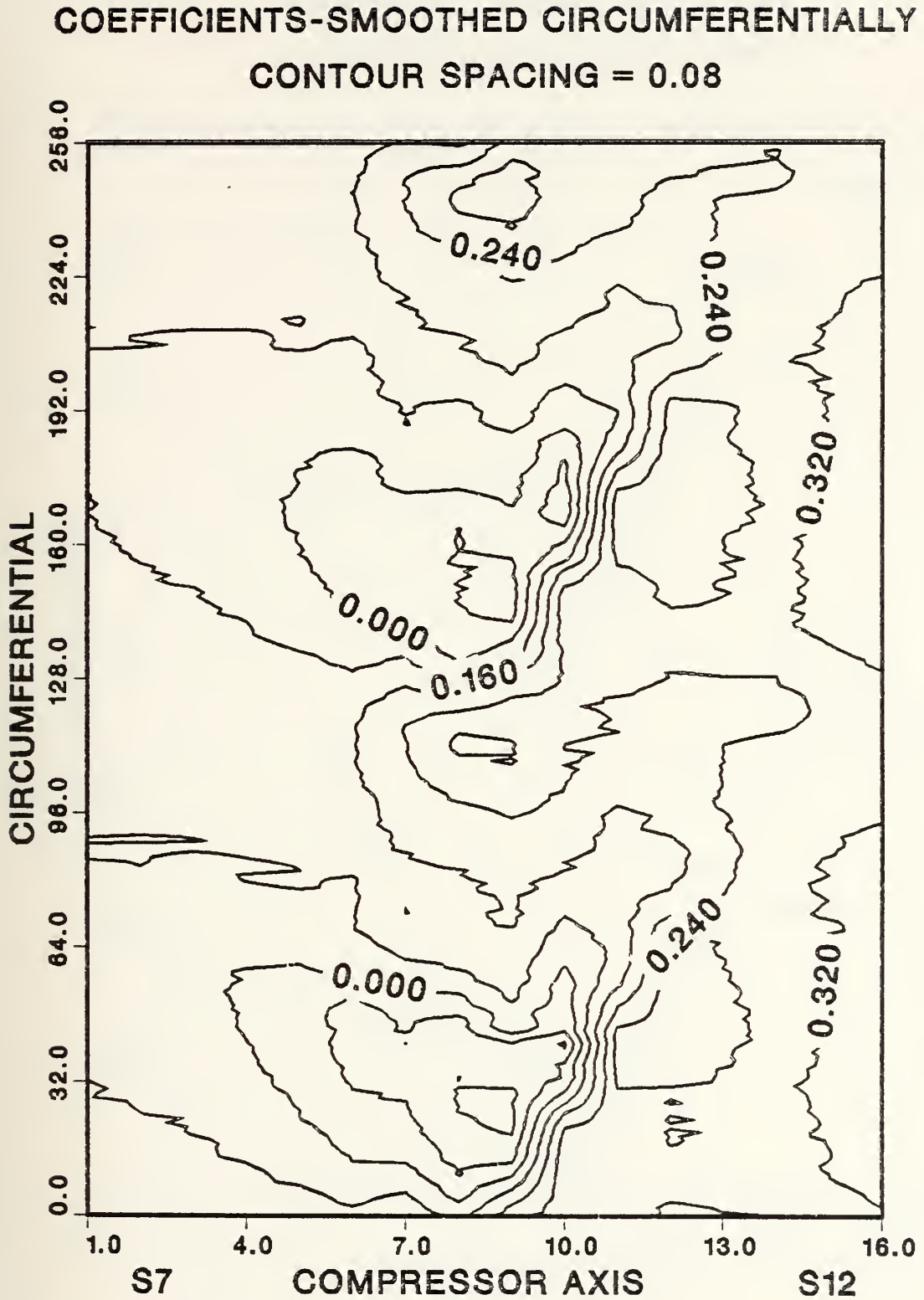

Figure 15 Contour Map of 70% Speed, Open Throttle

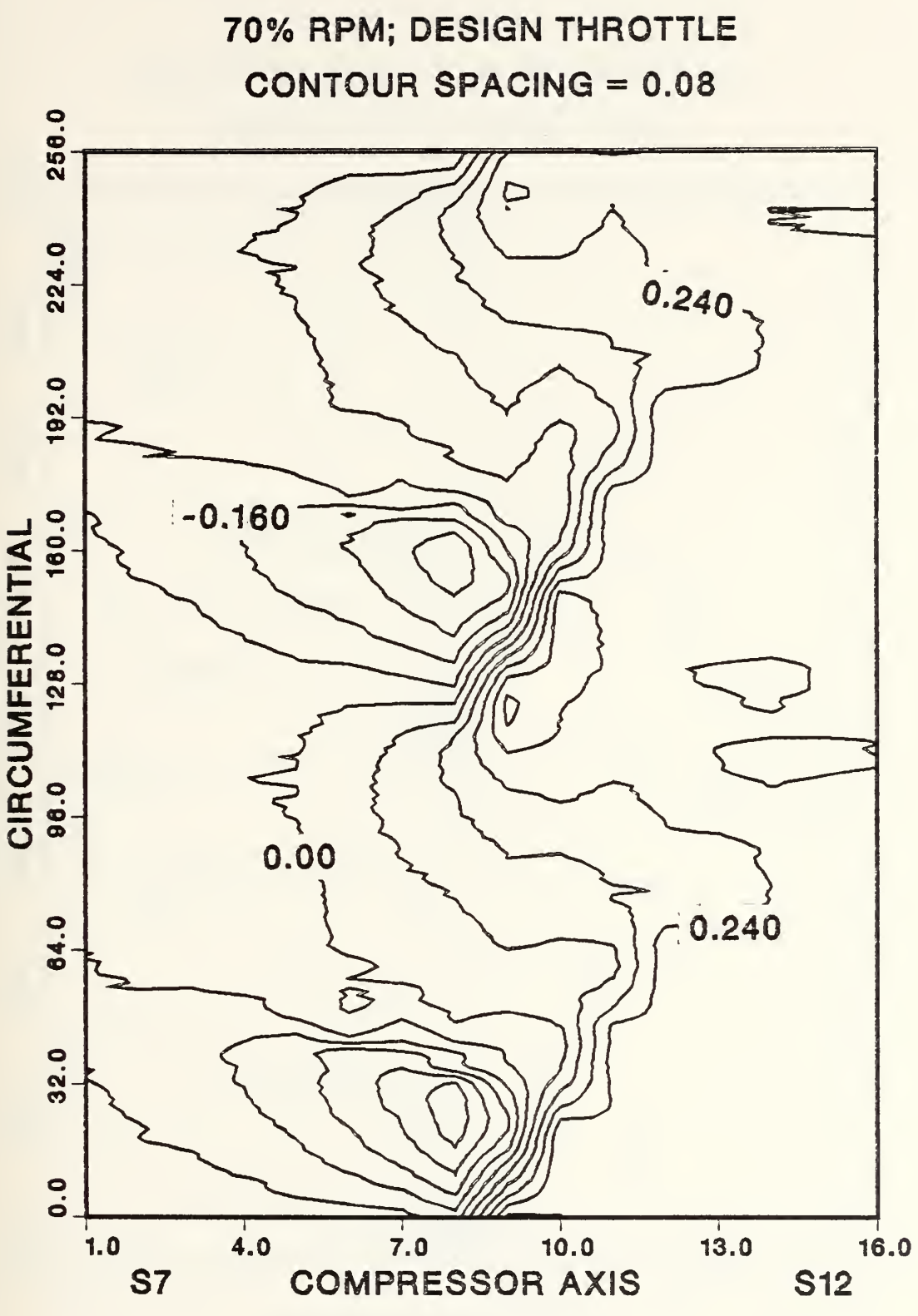

Figure 16 Contour Map of 70% Speed, Design Throttle

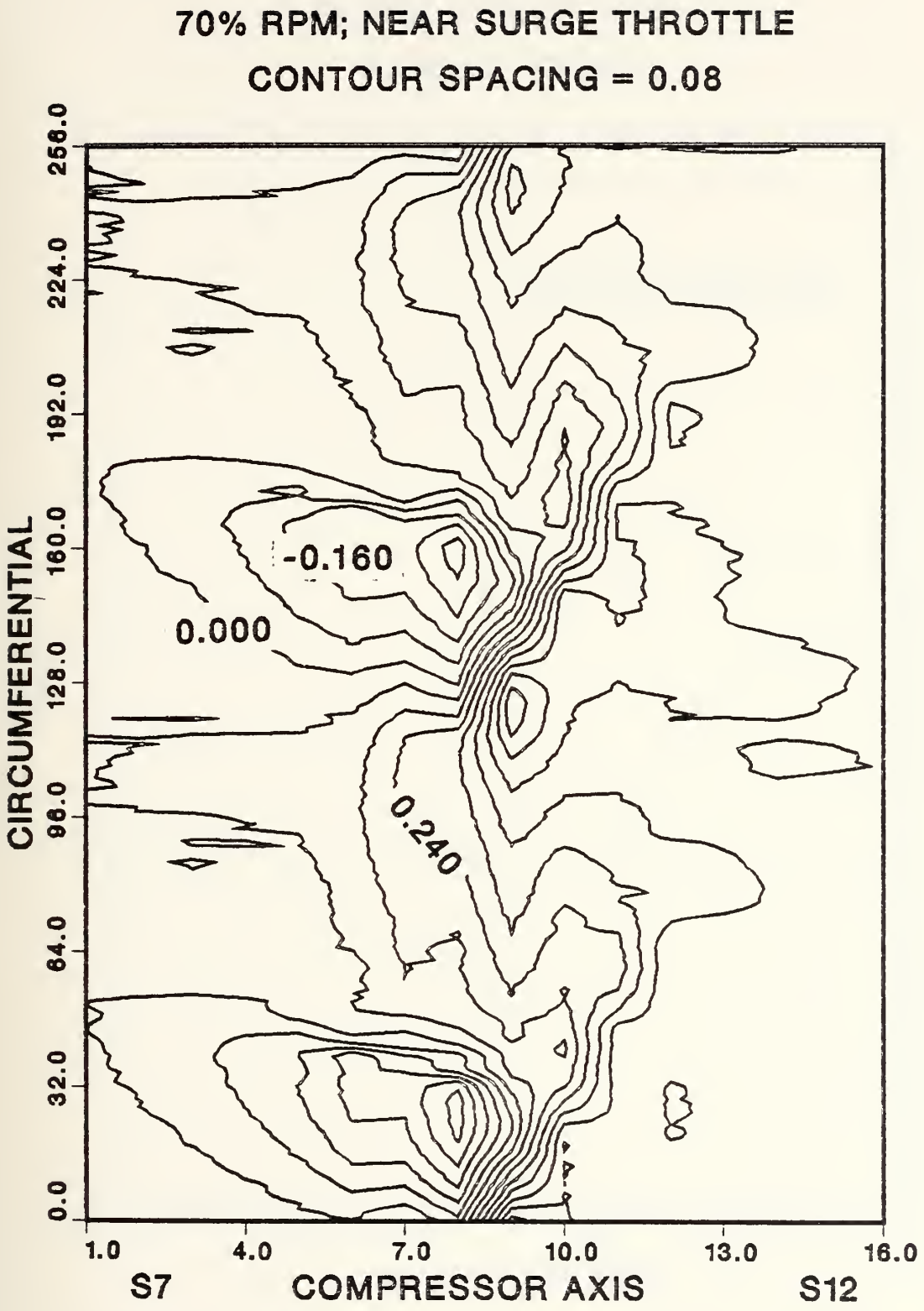

Figure 17 Contour Map of 70% Speed, Near-Surge

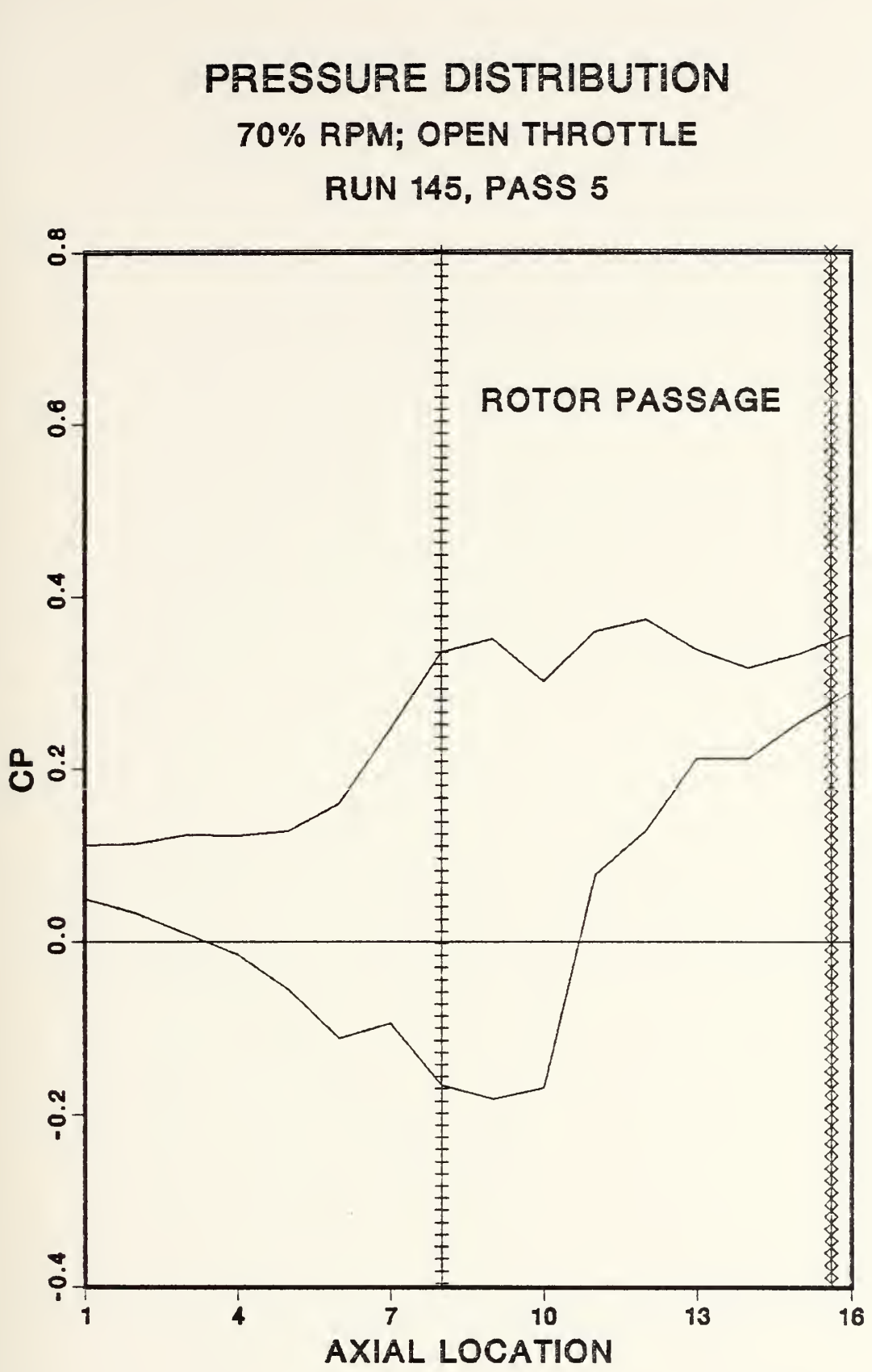

Figure 18 "Blade" Pressure Coefficients, 70%, Open

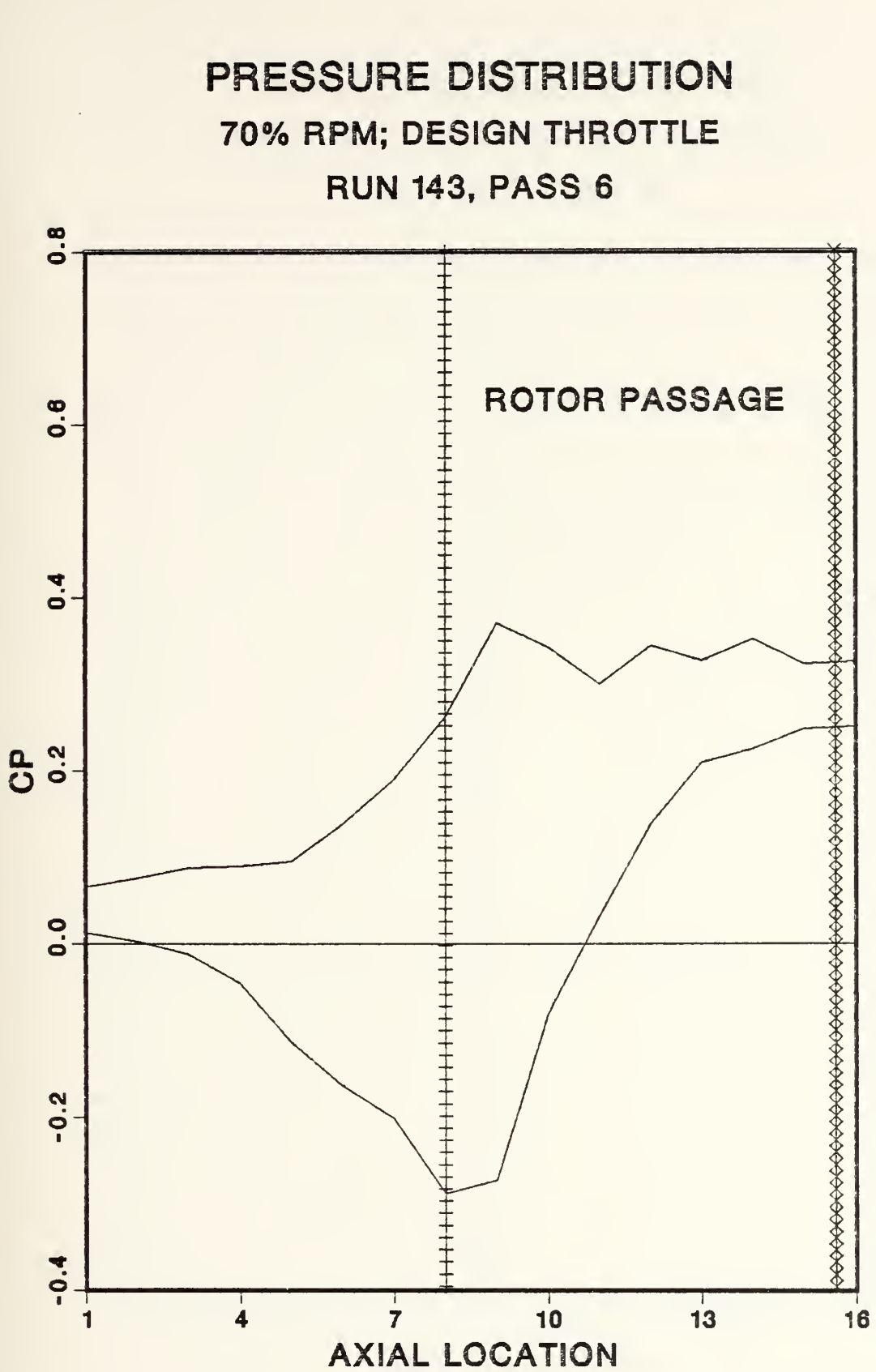

Figure 19 "Blade" Pressure Coefficients, 70%, Design

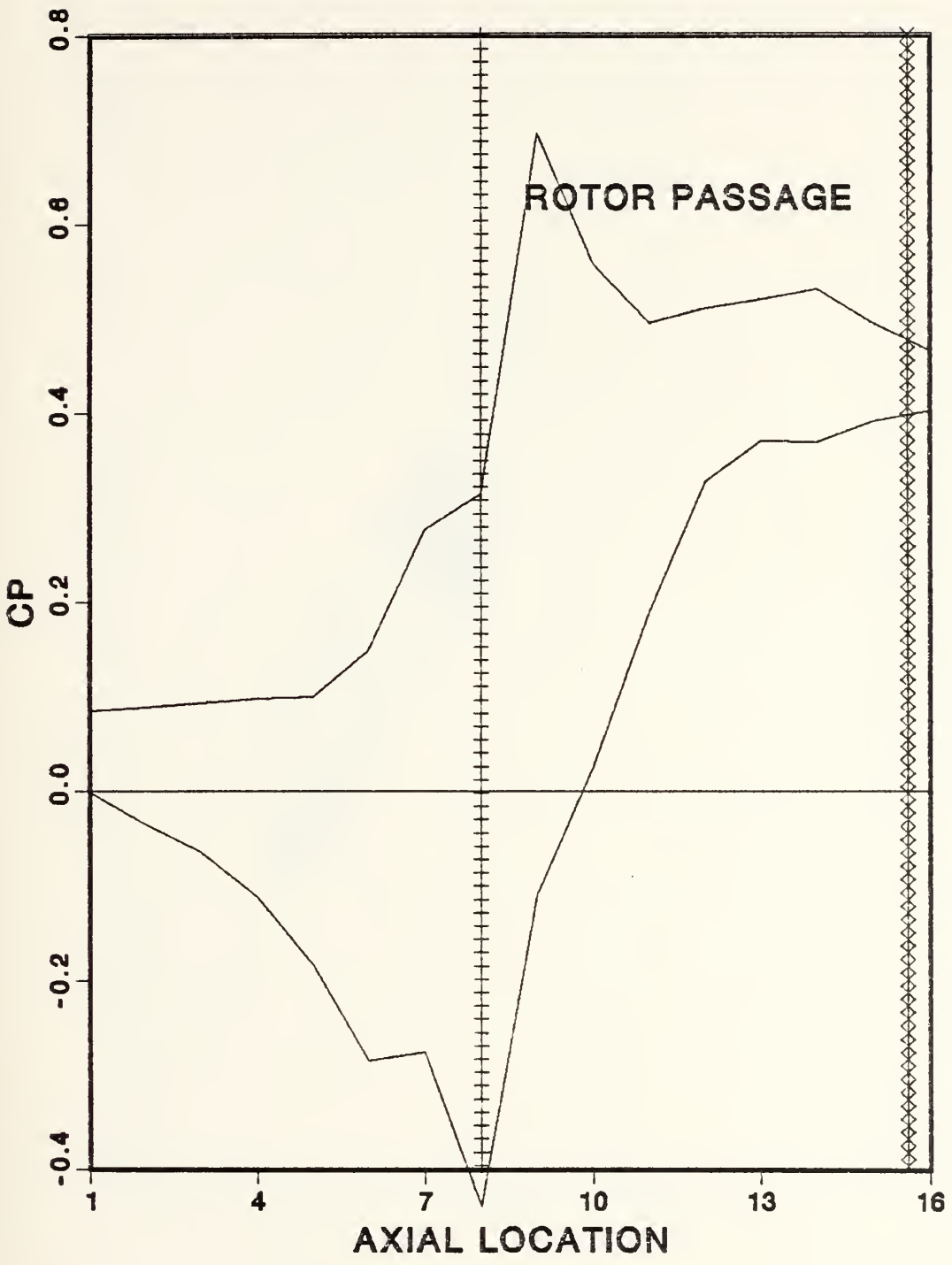

Figure 20 "Blade" Pressure Coefficients, 70%, Surge

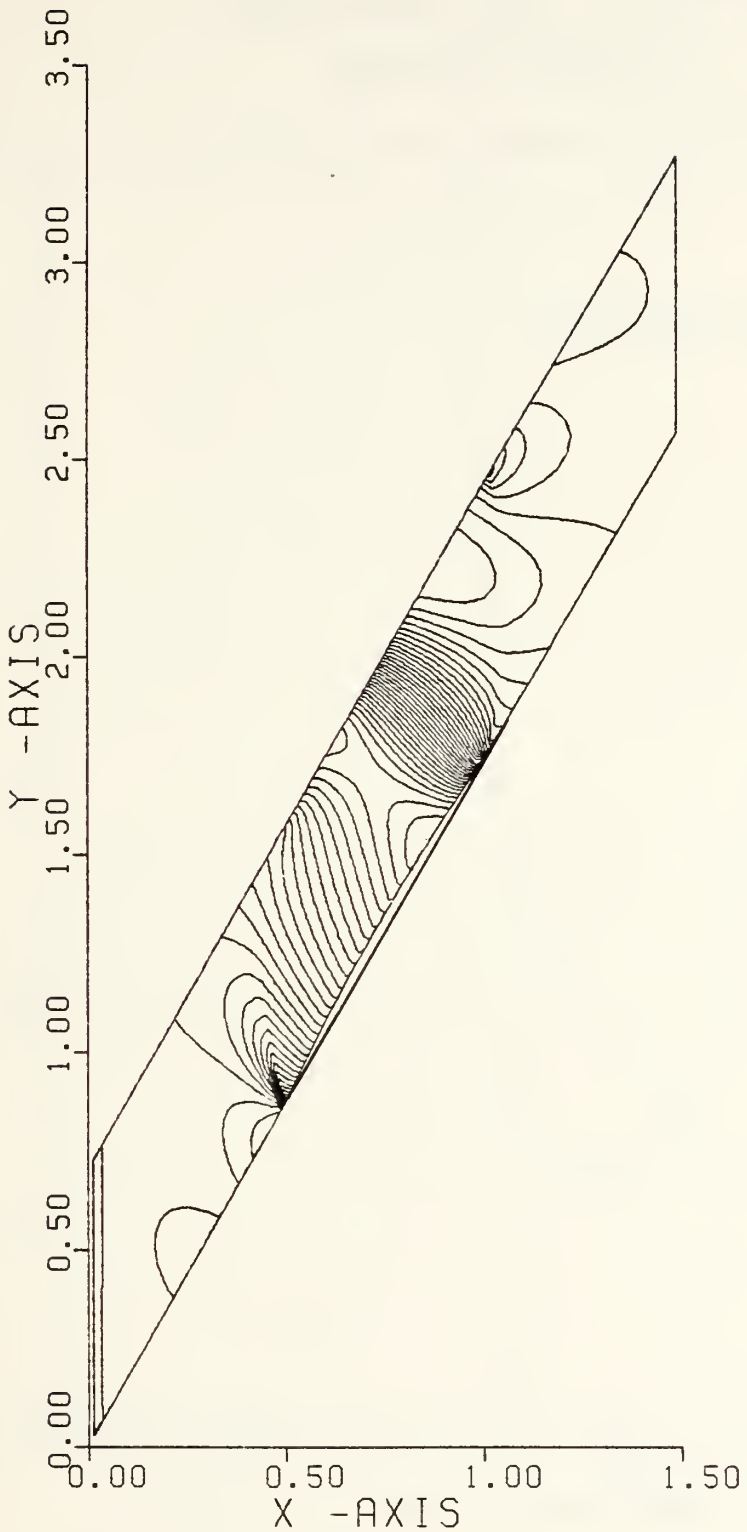

Figure 21 Contour Using Godunov Code

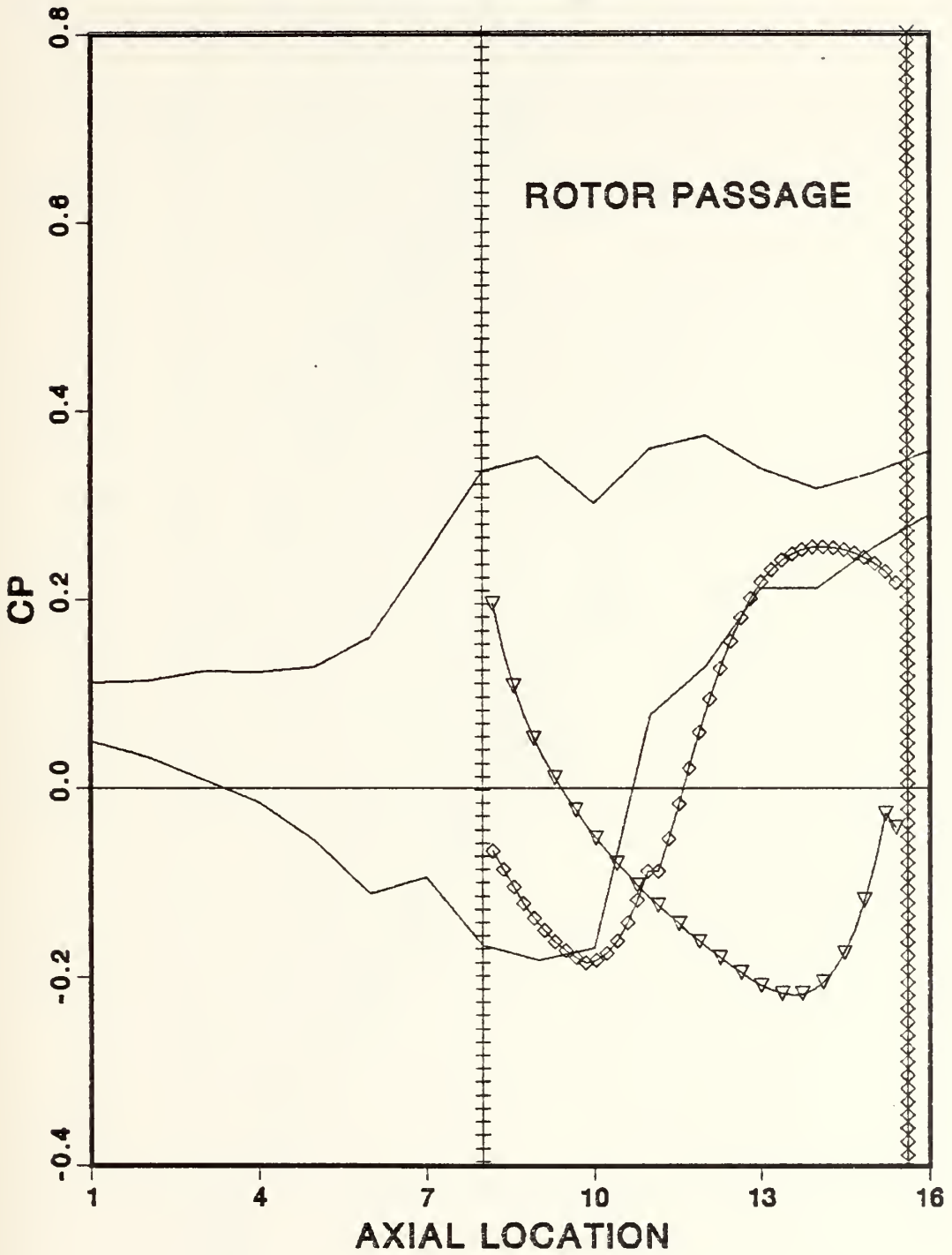

Figure 22 "Blade" Pressure Comparison with Godunov Code

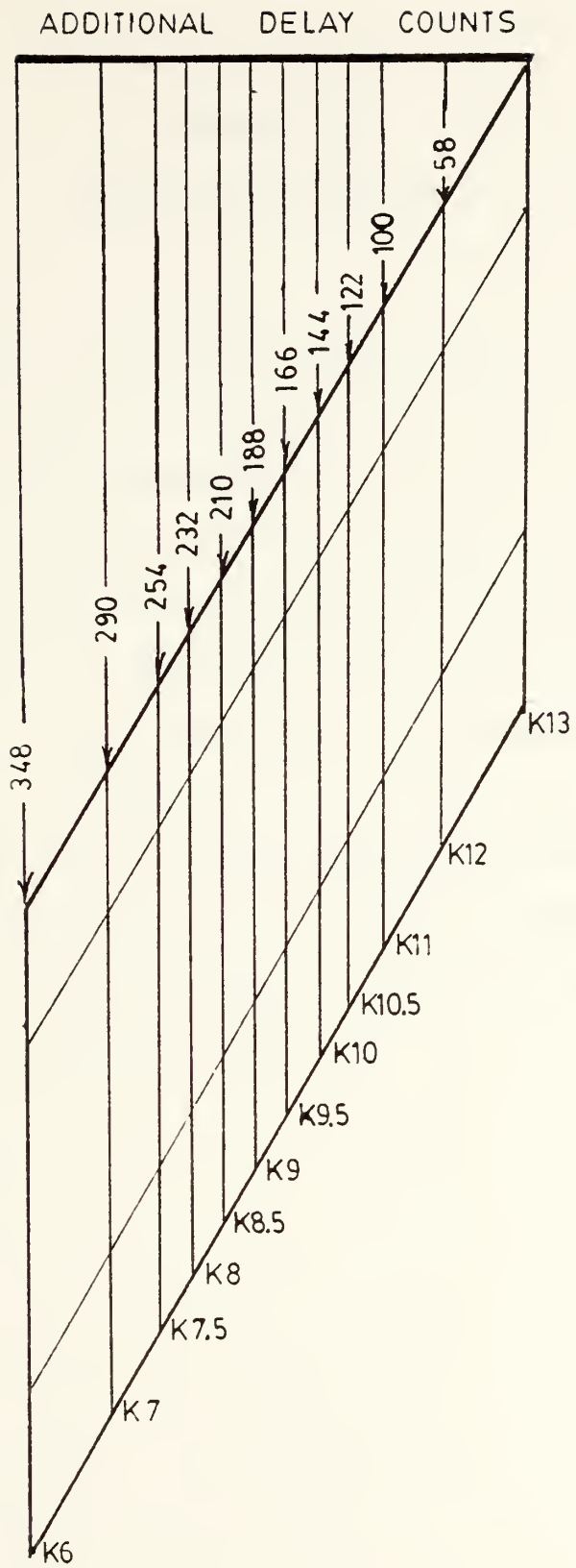

Figure 23 Recommended Data Acquisition Technique

APPENDIX A

ACQUISITION SOFTWARE

A.1 INTRODUCTION

This appendix contains a description of the FORTRAN program WKAQN and its associated subroutines. The intention is to provide a single location for the specific numbers and equations used in the program. This should make it possible to adapt the program easily to changes in hardware configuration or changes in acquisition procedure.

A summary of the acquisition procedure and a detailed user's manual is available in TPL Technical Note 83-01. In the remaining sections of this appendix, each subroutine is described separately with a listing of the FORTRAN code. The functions called were either from the HP relocatable Library, or from Geopfarth [Ref. 6].

TABLE A-1

Subroutines and Functions for Program WKAQN

Name	Purpose
WKOLC	Perform on-line calibration, record steady state and flow data.
CURFT	Calculate linear curve-fit to calibration data.
WKPAC	Interface with Kulite transducers to read unsteady pressure data.
WKRMS	Determines the maximum, minimum, and root-mean-square of the sample set.
XTREM	Calculates the maximum and minimum for a blade passage.
	Functions from Geopfarth [Ref. 6]
ACQN	Positions the scanivalve and reads the DVM.
CNTL	Closes the scanner channel.
ICON	Converts 2-digit integer to an ASCII string.
IPORT	Interrogates scanivalve.
SCANR	Closes scanner channel and reads scanivalve or counter.
WAIT	Causes a defined time delay.
	Son Program
WKPLT	Used to plot waveform during acquisition of unsteady data.

A.2 FORTRAN PROGRAM--WKAQN

A.2.1 Description of Program WKAQN

This program is the main FORTRAN program for the acquisition of unsteady pressure in the transonic compressor. The program labels and creates data file space on the disk, performs an on-line calibration of the transducers, records steady state pressures and flow parameters, reads unsteady pressure data and plots the waveform, stores the accepted data, and performs a second on-line calibration.

After the following detailed description, a line by line explanation of the coding is provided. A flow diagram is given in Figure A-1 and a program listing is provided at the end of Section A.2.3.

The program commences with declarations, dimensions, and constant values. Then section "100" is a series of interactive inputs to identify the data files and specify which portions of the program will be used. 'RUN' is the compressor test run number. 'PASS' is the sequential number of data sets taken during the same run.

Section "200" is used to define the data file names from the RUN and PASS entered above and create the space on the mass storage disk. The data files, one for each Kulite data set, are labeled WKxx01 to WKxx12, where xx is the last two nubmers of the RUN number. The steady state data, flow parameters, and calibration data are stored in file WKCxxx where xxx is the RUN number. Succeeding passes

would change the label by replacing the K in the name with the PASS number. For example, the data files for the fifth pass on run 145 would be W54501 to W54512 and W5C145.

The files are created on the disk to ensure room is available for the acquired data. Should a cartridge fill-up, options are provided to allow the user to specify another cartridge to store the data. An error code is returned in the 'CREAT' call to identify the location of the error in the program should one occur. The use of the CREAT subroutine and error code is explained in the Hewlett-Packard RTE-IVB Programmer's Reference Manual. [Ref. 16]

The on-line calibration and acquisition of steady state pressure is done in section "300." Although the calibration is optional, it should be done for each complete set of Kulite data acquired. The program calls the subroutine WKOLC if the option is chosen. The array OLCAL is used to store the calibration data, pneumatic pressure data, and flow parameters. The main program calculates RPM from a reading of 1/6 revolutions per second. Therefore, rotor-shaft speed is converted to RPM by a factor of 10.

The mass flow rate is calculated to provide throttle information used to identify the compressor running conditions. The method used is taken from Shreeve. [Ref. 20]

The acquisition of unsteady data is performed in section "400." After printing the output heading, the user enters the number of samples to be taken and the blade pair.

The number of samples is the number of Kulite pressure readings that will be taken at one of the 256 blade-to-blade locations. Since this would create an enormous amount of data, only the average of the sample set, a root-mean-square of the set, maximum, and minimum values are retained. The blade pair identifies for which of the nine blade pairs of the rotor that the pressure data will be recorded. The subroutine WKPAC performs the actual acquisition and the calculation of the retained data. The data is stored in a 4 x 256 array labeled ARRAYA as follows:

Row 1	Average pressure data
Row 2	RMS values
Row 3	Maximum values
Row 4	Minimum values

Subroutine 'XTREM' is called to calculate the maximum and minimum value of the data in each of the two blade passages which is output on the printer. The average is also calculated for each blade passage which is essentially the steady state value of the pressure at the axial location.

The average data from the first row of ARRAYA is then plotted in section "500" to observe the waveform using the 'son' program WKPLT. A complete description of father-son programming is available in the HP RTE-IVB Programmer's Reference Manual. [Ref. 16: Chapter 2] The program is called by the 'EXEC' at line 193 in the program listing. The

statement following is only executed if an error occurs when calling the son program.

Once the plot is finished, the user has the options of retaking the data, accepting the data, or exiting. The alternate of the two graphics output devices, terminal or plotter, can be selected at this point. If the data is repeated, the previous data is erased. If the data is accepted, it is stored in its predesignated file on the disk. Section "600" opens the file, writes the data from ARRAYA into the file, and closes the file. Note that all of the FMP subroutines are used with the error processing feature described for CALL CREAT above. The extreme values and average for each blade passage are output on the printer.

At this point, the acquisition is complete for one Kulite transducer and the program returns to section "400" to repeat the procedure for the next and subsequent Kulites. When the last of the unsteady pressure data is accepted, the program advances to the second on-line calibration.

The second calibration is similar to the first using subroutine WKOLC. After the calibration is complete, the array OLCAL is written into the file WKCxxx using the FMP calls described above.

The acquisition procedure is then complete the user has the option to exit or return to the beginning for another set of data.

A.2.1 Program--WKAQN Details

Line No.	Equation/Constant	Origin
29	GAIN = 40.0	The amplifier gain from the fast response semi-conductor transducer to the A/D converter.
31	IDCBS = 144	See Reference 16, Chapter 3.
31	ITYPE = 1	Data file, see Reference 16.
31	IL = 2048	Length of 4 x 256 data array; 4*256 reals/row * 2 words/real
31	JL = 1024	Length of 2 x 256 on-line cal array, OLCAL.
31	KL = 512	Length of 1 x 256 data array, used with plot routine WKPLT.
32	MASK = 177700B	Saves only 13 digits of number read by A to D converter.
32	INUM = 1	Resets plot counter to 1.
33	ISIZE = (16,128)	Size of buffer needed for file. DATMAT, when storing on disk. All type 1 files have rows 128 words long. [Ref. 16]
33	JSIZE = (8,128)	Same as above, for OLCAL array.
35	COC = 1.03	Contraction ratio of channel.
35	R = 287.06	Gas constant 287.06 N-m/Kg-K.
35	G9 = 1.402	Ratio of specific heats.
49	PATM = PA * 13.57	13.57 in. H_2O per in. HG.
97	JJ = 1	Used with the line directly above. With CALL CREAT, (or any other file

Line No.	Equation/Constant	Origin
		management calls), a return variable is used to identify problems. The next several lines of code use IERR to clear some particular probs. Error codes are listed in the HP RTE-IVB Reference Manual, [Ref. 16] Chapter 3. Note: Regardless of the error number, a statement (line 310) is returned to the terminal. JJ=1 identifies the error with this CALL CREAT. Note: line 121 uses a different value of JJ.
138	RPM = OPCAL(1,103) * 10.0	The machine speed is measured in revs per 6 seconds.
139	TT = OLCAL(1,106) * 1000. * 34.7279 + 32.6149	Total temperature from Type J Iron-Constantan thermocouple is recorded in microvolts, converted to millivolts and multiplied by slope from the chart provided for the probe. Note: 32 degrees subtracted off in preparation for conversion to degrees Kelvin.
140	TT = TT * 5/9 + 273.15	Conversion from Fahrenheit to degrees Kelvin (32 subtracted above).
141	P1NC=((OLCAL(1,82)-OLCAL(1,79))*100000.+PATM)*249.0881	Pneumatic pressure measured at the nozzle is stored in OLCAL(1,82). As with all pneumatic measurements, a zero or Tare, recorded in OLCAL(1,79)

Line No.	Equation/Constant	Origin
		for scanivalve #1, is subtracted. The resulting voltage is multiplied by 100000.0 to get pressure in units of inches of water. This is accurate gage pressure which is added to the atmospheric pressure for a total pressure. The factor at the end converts inch of water to Newtons per meter squared.
142	DPNC = (OLCAL(1,82)-OLCAL(1.83))*10000.*249.0881	The difference in pressure P1 and P2 is a difference in gage pressure and since the tare if the same for both readings, they are omitted. Units-N/m-m.
143	RO = 6.0 * .0254	Radius of flow meter 6 inches times .0254 meters/ inch.
144	AOC = 3.141593*(RO*RO)	Area of flow meter.
145	MFL = SQRT(2*(P1NC*DPNC)/(R*TT)) * 2.204634	Mass flow rate described in reference 8. Multiplied by factor to convert Kg/sec to lbm/sec.
146	MFLC=MFL*(1-(3*DPNC)/(4*G9*P1NC)) * (COC * AOC)	Referred flow rate. [Ref. 20]
189	ICODE = 9 + 100000B	Sets input for CALL EXEC 9. Schedules "son" program and waits. The binary bit sets no abort for an error. Allows the next statement after the call to be executed if an error occurs in program WKPLT. If no error occurs, the program skips to the second following statement.

Line No.	Equation/Constant	Origin
190	IP(2) + PLOTLU	Input parameter for WKPLT plot routine.
191	IP(3) = INUM	Input parameter for WKPLT.
192	IP(4) = ADCHNL-1	Kulite number (1-12).
196	CALL RMPAR(IP)	Recovers IP parameters from the son program. [See Ref. 16]
197	IP(1) = 100000B	Return value of IP(1) if an error occurs.
199	ICODE = 14+100000B	Sets input parameter for CALL EXEC 14. Retrieves data array from WKAQN for plot program.
261	ISP = ATOD(L) + 88	Converts Kulite number (1-12) to the location in the OLCAL array where the corresponding pneumatic pressure resides. (See Fig. A.3, p. 93)
262	IF (L .GT.10) ISP = ISP + 1	Allows for pressure tap 11.5 without corresponding Kulite.
263	SP = OLCAL(1,ISP)*100000.	Average pressure at Kulite location in inches of water.
296	PASS=PASS + IGO	Increments PASS which redefines data files.

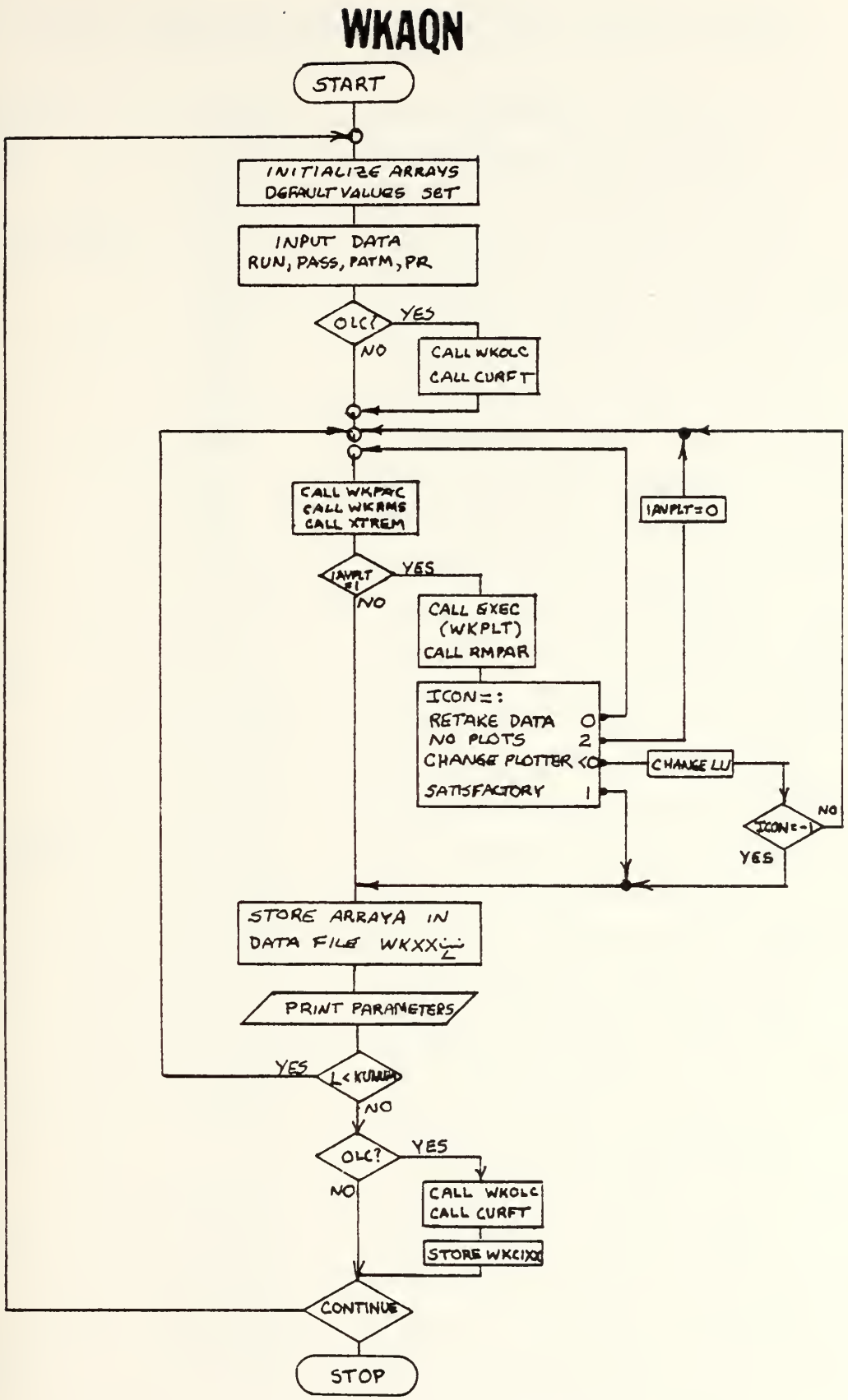

Figure A.1 Flow Diagram of Program WKAQN

A.2.3 Nomenclature & Listing for Program WKAQN

ATOD(12)	integer	A/D convertor channels
ADCHNL	integer	Incremented a/d channel
AOC	real	Area of flow meter throat
ARRAYA(4,256)	real	Kulite data storage array
AVG1	real	Average pressure across blade 1
AVG2	real	Average pressure across blade 2
AVG	real	Average pressure to be plotted
BP	real	Blade pair (1 - 9)
COC	real	Contraction ratio in flow meter
DATE	real	Calendar date yy.mmdd
DPNC	real	Flow meter differential pressure
GAIN	real	Amplifier gain of paced data
GO	integer	Index when plotter ready
G9	real	Ratio of specific heats (gamma)
IAVPLT	integer	Index to option for plotting
ICAL	integer	Index to option for on-line cal
ICON	integer	Index for plotting options
ICR	integer	Cartridge to store data files
IDCB(144)	integer	Data control block (buffer)
IDCBS	integer	Data control block size
IL	integer	Length of kulite data files
INAM(3)	integer	Name of kulite data files
IOPTN	integer	Return parameter from OPEN
IP(5)	integer	Parameters passed to "son" pgm
ISECU	integer	Security code to protect files
ISIZE(2)	integer	Size of kulite data files (records, words/record)
ISP	integer	OLC index for pneum. pressures
ITYPE	integer	Type of data files (Type 1)
JEND	integer	Total of points for calibration
JL	integer	Length of on-line cal data file
JNAM(3)	integer	Name of on-line cal data file

JSIZE(2)	integer	Size of O-1-C file (see ISIZE)
KL	integer	Length of plot program file
KNAM(3)	integer	Name of "son" program, WKPLT
KU(12)	real	Kulite numbers and A/D channels
KUNUM	real	Total number of kulites
MASK	binary	Logical mask to remove extra digits from acquired data
MFLC	real	Mass flow rate in compressor
N	integer	Number of pressure samples at each point to be averaged
NUM	integer	Number of graphs for plot page
OLCAL(2,256)	real	On-line calibration data array
PATM	real	Atmospheric pressure
PASS	integer	Label for additional data on same RUN of compressor
PLOTLU	integer	Logic unit for plot output 1--Terminal, 13--Plotter
PLT(256)	real	Data buffer sent to plot pgm
P1NC	real	Static pressure in flow meter
R	real	Gas constant for air
RO	real	Radius of flow meter throat (meters)
RPM	integer	Shaft angular velocity (RPM)
RUN	integer	Label of data files (TCR Run #)
SP	real	Pneumatic pressure colocated with Kulite tap
TAMB	real	Ambient temperature
TT	real	Total temperature

```
&WKAQN T=00004 IS ON CR00028 USING 00126 BLKS R=0000

0001  FTN4,L
0002        PROGRAM WKAQN (3,99)
0003  C ************************************************************************ C
0004  C *              TRANSONIC COMPRESSOR WALL-KULITE ACQUISITION             * C
0005  C *    THIS PROGRAM WAS WRITTEN FOR THE HP-21MX ACQUISITION COMPUTER      * C
0006  C *    AT THE NAVAL POSTGRADUATE SCHOOL TURBOPROPULSION LABRATORY         * C
0007  C *    TO ACQUIRE KULITE-PROBE PRESSURE DATA AT THE WALL OF THE ROTOR     * C
0008  C *    IN THE TRANSONIC COMPRESSOR , STORE THE DATA FOR REDUCTION,        * C
0009  C *    AND PLOT RAW DATA FOR A FIRST LOOK AT DEGREE OF SUCCESS.           * C
0010  C *    FOR A MORE COMPLETE EXPLANATION OF USE OF THIS PROGRAM, SEE        * C
0011  C *    CORNELL, NPS THESIS,1983.                                          * C
0012  C *                        VER 7.0   10 AUG 83                    DWC     * C
0013  C ************************************************************************ C
0014  C
0015  C ------------------------------------DIMENSIONS AND INITIAL VALUES --
0016  C
0017        REAL     ARRAYA(4,256),OLCAL(2,256),PLT(256),KU(12)
0018        REAL     PAT,PATM,TA,TAMB,MAX1,MIN1,AVG1,MAX2,MIN2,AVG2,AVG,MAX,MIN
0019        REAL     TT,P1NC,DPNC,RO,AOC,COC,MFL,MFLC,R,G9,DATE,GAIN
0020        INTEGER RUN,PASS,ICAL,ICR,DEFLT,IAVPLT,PLOTLU,BP,N,RPM,GO,ICON
0021        INTEGER IP(5),INAM(3),JNAM(3),KNAM(3),ATOD(12),NUM,INUM,KUNUM,IGO
0022        INTEGER IDCB(144), ISIZE(2),JSIZE(2),IL,JL,KL,IDCBS,ADCHNL,ISP
0023  C     **** NOTA BENE ****      PRIOR TO RUN OF PROGRAM, CORRECT DATA
0024  C                    IN THIS SECTION FOR KULITES AND CORRESPONDING A/D
0025  C                    CHANNELS.  ALSO CHECK INAM EQUIVALENCES AT LINE
0026  C                    85, (STATEMENT 200).
0027        DATA KU  /6.0,7.0,7.5,8.0,8.5,9.0,9.5,10.0,10.5,11.0,12.0,13.0/
0028        DATA ATOD/ 2 , 3 , 4 , 5 , 6 , 7 , 8 ,  9 , 10 , 11 , 12 , 13 /
0029        DATA KUNUM/12/,ICR/29/,GAIN/40.0/
0030  C
0031        DATA IDCBS/144/,ISECU/0/,ITYPE/1/,IL/2048/,JL/1024/,KL/512/
0032        DATA MASK/177700B/,INUM/1/
0033        DATA ISIZE/16,128/,JSIZE/8,128/, KNAM/2HWK,2HPL,2HT /
0034        DATA ARRAYA/1024*0.0/,OLCAL/512*0.0/,IP/5*0/,PLT/256*0.0/
0035        DATA COC/1.03/,R/287.06/,G9/1.402/
0036  C
0037  C -------------- "100" --------------- INPUT VALUES -----------------
0038  C
0039        WRITE(1,20)
0040     20 FORMAT("ENTER DATE....E.G. (YY.MMDD)")
0041        READ (1,*) DATE
0042    100 WRITE (1,101)
0043    101 FORMAT("ENTER RUN AND PASS NUMBERS .... E.G. (142,1)")
0044        READ (1,*) RUN,PASS
0045        WRITE (1,110)
0046    110 FORMAT("ENTER ATMOSPHERIC PRESSURE AS IN HG, AND",/,"PRESSURE",
0047       1   " RATIO FROM STEADY STATE DATA..... E.G. (29.92,1.123)")
0048        READ (1,*) PA,PR
0049        PATM = PA * 13.57
0050        WRITE (1,120)
0051    120 FORMAT("IF ON LINE CALIBRATION DESIRED, ENTER (1) ")
0052        READ (1,*) ICAL
0053        WRITE (1,130)
0054    130 FORMAT("DO YOU WANT TO PLOT AVERAGE DATA?",/,5X,"IF YES ENTER 1")
0055        READ (1,*) IAVPLT
0056        IF (IAVPLT .NE. 1) GO TO 200
0057        WRITE (1,140)
0058    140 FORMAT("ENTER LU# OF PLOTTING DEVICE:  TERMINAL = 1",/,
```

```
     1        "                                    PLOTTER  = 13")
      READ (1,*) PLOTLU
      IF (PLOTLU .EQ. 1) GO TO 200
      WRITE(1,160)
 160  FORMAT("ENTER NUMBER OF PLOTS PER GRAPH (4 MAX)")
      READ (1,*) NUM
      IF ( NUM .GT. 4) NUM = 4
C
C -------------- "200" --------------- DEFINE DATA FILES -------------
C
 200  INAM(1) = 2HWK
      IF (PASS .EQ. 2 ) INAM(1) = 2HW2
      IF (PASS .EQ. 3 ) INAM(1) = 2HW3
      IF (PASS .EQ. 4 ) INAM(1) = 2HW4
      IF (PASS .EQ. 5 ) INAM(1) = 2HW5
      IF (PASS .EQ. 6 ) INAM(1) = 2HW6
      IF (PASS .EQ. 7 ) INAM(1) = 2HW7
      IF (PASS .EQ. 8 ) INAM(1) = 2HW8
      IF (PASS .EQ. 9 ) INAM(1) = 2HW9
      JNAM(1) = INAM(1)
      IF ( RUN .EQ. 146 ) INAM(2) = 2H46
      IF ( RUN .EQ. 147 ) INAM(2) = 2H47
      IF ( RUN .EQ. 148 ) INAM(2) = 2H48
      IF ( RUN .EQ.  99 ) INAM(2) = 2H99
      DO 290 I = 1,KUNUM
 210     IF (I .EQ. 1) INAM(3) = 2H01
         IF (I .EQ. 2) INAM(3) = 2H02
         IF (I .EQ. 3) INAM(3) = 2H03
         IF (I .EQ. 4) INAM(3) = 2H04
         IF (I .EQ. 5) INAM(3) = 2H05
         IF (I .EQ. 6) INAM(3) = 2H06
         IF (I .EQ. 7) INAM(3) = 2H07
         IF (I .EQ. 8) INAM(3) = 2H08
         IF (I .EQ. 9) INAM(3) = 2H09
         IF (I .EQ. 10) INAM(3) = 2H10
         IF (I .EQ. 11) INAM(3) = 2H11
         IF (I .EQ. 12) INAM(3) = 2H12
         CALL CREAT(IDCB,IERR,INAM,ISIZE,ITYPE,ISECU,ICR,IDCBS)
         JJ = 1
         IF( IERR .LT. 0 )  WRITE (1,990) JJ,IERR
         IF( IERR .NE. (-2) ) GOTO 230
         WRITE(1,220) INAM(2)
 220     FORMAT("FILENAME ",A2," ALREADY EXISTS!",/,
     1      "TO RENAME FILE, ENTER 1",/," TO EXIT,          ,ENTER 0")
         READ(1,*) II
         CALL CLOSE(IDCB,IERR,0)
         IF ( II .EQ. 0 ) GOTO 900
         WRITE(1,225)
 225     FORMAT("ENTER NEW FILENAME.......(E.G. W24301)")
         READ(1,*) INAM
         GOTO 210
 230     IF( IERR .NE. (-33) ) GO TO 290
         WRITE(1,235) ICR,INAM
 235     FORMAT("NOT ENOUGH ROOM ON CARTRIDGE ",I3,".  TO STORE"
     1          "FILE ",3A2,", ENTER ANOTHER MOUNTED CARTRIDGE.")
         READ(1,*) ICR
         CALL CLOSE(IDCB,IERR,0)
         GOTO 210
 290  CONTINUE
      JNAM(2) = 2HC1
```

```
0119         JNAM(3) = INAM(2)
0120         CALL CREAT(IDCB,IERR,JNAM,JSIZE,ITYPE,ISECU,ICR,IDCBS)
0121         JJ = 5
0122         IF( IERR .LT. 0 )  WRITE (1,990) JJ,IERR
0123   C
0124   C -------------- "300" --------------- ON-LINE CALIBRATION
0125   C
0126    300  WRITE(6,301) DATE
0127    301  FORMAT(1H1,30X,"PROGRAM WKAQN -- ",F7.4,/)
0128         IF (ICAL .NE. 1) GO TO 400
0129         WRITE(6,310) RUN,ICAL
0130    310  FORMAT(25X," ON-LINE CALIBRATION OF WALL-KULITES",/,
0131        1   25X," RUN-",I3,10X," CALIBRATION NO. ",I1)
0132         CALL WKOLC (ICAL,OLCAL,KU,KUNUM)
0133         OLCAL(1,256) =  FLOAT(RUN)
0134         OLCAL(1,255) = FLOAT(PASS)
0135         OLCAL(1,110) = PATM
0136         OLCAL(1,250) = DATE
0137         ICAL = 2
0138         RPM = OLCAL(1,103) * 10.0
0139         TT = OLCAL(1,106) * 1000.0 * 34.7279 + .6149
0140         TT = TT * 5./9. + 273.15
0141         P1NC =( (OLCAL(1,82) - OLCAL(1,79) ) * 100000. + PATM ) * 249.0881
0142         DPNC = ( OLCAL(1,82) - OLCAL(1,83) ) * 100000. * 249.0881
0143         RO = 6.0 * 0.0254
0144         AOC = 3.141593 * (RO * RO)
0145         MFL = SQRT( ((2.0*(P1NC*DPNC))/R)/TT ) * 2.204634
0146         MFLC =MFL*(1.0 -(((( 3.0 * DPNC)/ 4.0) / G9) / P1NC))*(COC*AOC)
0147         OLCAL(1,251) = MFLC
0148         OLCAL(1,181) = KUNUM
0149         DO 320 I = 1,KUNUM
0150            OLCAL(1,181+I) = KU(I)
0151    320  CONTINUE
0152   C
0153   C -------------- "400" --------------- ACQUISITION ROUTINE (LOOP)
0154   C
0155    400  WRITE(1,405)
0156    405  FORMAT("WHEN READY TO ACQUIRE DATA.............ENTER 1")
0157         READ(1,*) GO
0158         IF ( GO .NE. 1 ) GOTO 400
0159         WRITE(6,410) DATE,RUN,PASS,RPM,MFLC,GAIN
0160    410  FORMAT(1H1,19X,"WALL-KULITE PRESSURE DATA FROM TCR USING WKAQN",
0161        1  /,5X,"DATE: ",F7.4,5X,"RUN NUMBER: ",I3,5X,"PASS NUMBER: ",I2,
0162        2    5X,F10.2,"RPM",5X,"MASS FLOW RATE: ",F10.7," LB/SEC",5X,
0163        3    "GAIN=",F4.1)
0164         WRITE (6,415)
0165    415  FORMAT("0",9X," KU   CH  FILE   REP  PAIR     MAX1     MIN1  ",
0166        1    "   AV1     MAX2     MIN2     AVG1     AVERAGE   PNEU AVG",/,
0167        2   30X,"(PRESSURE IN INCHES H20)",//)
0168         OLCAL(1,224) = SCANR(08,39,01)
0169         OLCAL(1,225) = PATM
0170         DO 620 L=1,KUNUM
0171            WRITE(1,417)
0172    417     FORMAT("ENTER NO. SAMPLES AND BLADE PAIR..... E.G. (10,3)")
0173            READ (1,*) N,BP
0174            ADCHNL = ATOD(L)
0175    420     CALL WKPAC (ADCHNL,N,BP,ARRAYA)
0176            DO 430 I = 1,256
0177               PLT(I) = ARRAYA(1,I)
0178    430     CONTINUE
```

```
0179            CALL XTREM(PLT,MAX1,MAX2,MIN1,MIN2,AVG1,AVG2,GAIN)
0180            AVG = (AVG1 + AVG2) / 2.0
0181    C
0182    C -------------- "500" --------------- PLOT AVERAGE DATA --------------
0183    C
0184     500    IF (IAVPLT .NE. 1) GO TO 600
0185            MAX = MAX1
0186            IF (MAX2 .GT. MAX )  MAX = MAX2
0187            MIN = MIN1
0188            IF (MIN2 .LT. MIN ) MIN = MIN2
0189            ICODE = 9 + 100000B
0190            IP(2) = PLOTLU
0191            IP(3) = INUM
0192            IP(4) = ADCHNL-1
0193            CALL EXEC(ICODE,KNAM,IP(1),IP(2),IP(3),IP(4),IP(5),PLT,KL)
0194            GO TO 800
0195    C
0196     530    CALL RMPAR (IP)
0197            IF ( IP(1) .EQ. 100000B ) WRITE (1,540)
0198     540    FORMAT ( "&WKPLT TERMINATED ABNORMALLY!")
0199            ICODE = 14 + 100000B
0200            CALL EXEC(ICODE,1,PLT,KL)
0201            GOTO 800
0202     550    INUM = INUM + 1
0203            IF ( INUM .GT. NUM ) INUM = 1
0204            WRITE( 1,560) PLOTLU
0205     560    FORMAT("CHOOSE ONE OF THE FOLLOWING: ",/,
0206         1  "PLOT LU# IS ",I2,".",/,
0207         2          "A. IF DATA LOOKS SATISFACTORY,          ENTER  1"
0208         3  ,/,     "B. IF YOU WANT TO RETAKE THIS POINT,    ENTER  0"
0209         4  ,/,     "C. IF YOU WANT TO CHANGE PLOT DEVICE, AND..."
0210         5  ,/,     "      1) DATA LOOKS SATISFACTORY,       ENTER -1"
0211         6  ,/,     "      2) YOU WANT TO RETAKE DATA,       ENTER -2"
0212         7  ,/,     "D. IF NO MORE PLOTS DESIRED (EXIT)      ENTER  2" )
0213            READ (1,*) ICON
0214            IF (ICON .EQ. 2) IAVPLT = 0
0215            IF (ICON .GE. 0) GO TO 590
0216            IF (PLOTLU .EQ. 1) GO TO 570
0217            PLOTLU = 1
0218            NUM = 1
0219            GO TO 590
0220     570    PLOTLU = 13
0221            WRITE (1,580)
0222     580    FORMAT("ENTER THE NUMBER OF PLOTS ALREADY ON THE PLOTTER "
0223         1  ,/,"(IF 0 OR 4, ENTER 0)" )
0224            READ (1,*) INUM
0225            INUM = INUM + 1
0226            WRITE (1,160)
0227            READ (1,*) NUM
0228     590    IF ( IABS(ICON) .EQ. 1) GO TO 600
0229            DO 593 I = 1,4
0230               DO 592 J = 1,256
0231                  ARRAYA(I,J) = 0.0
0232     592       CONTINUE
0233     593    CONTINUE
0234            WRITE(1,417)
0235            READ(1,*) N,BP
0236            GO TO 420
0237    C
0238    C -------------- "600" --------------- STORE DATA FILES ----------------
```

```
0239  C
0240   600      IF ( L .EQ. 1) INAM(3) = 2H01
0241            IF ( L .EQ. 2) INAM(3) = 2H02
0242            IF ( L .EQ. 3) INAM(3) = 2H03
0243            IF ( L .EQ. 4) INAM(3) = 2H04
0244            IF ( L .EQ. 5) INAM(3) = 2H05
0245            IF ( L .EQ. 6) INAM(3) = 2H06
0246            IF ( L .EQ. 7) INAM(3) = 2H07
0247            IF ( L .EQ. 8) INAM(3) = 2H08
0248            IF ( L .EQ. 9) INAM(3) = 2H09
0249            IF ( L .EQ. 10) INAM(3) = 2H10
0250            IF ( L .EQ. 11) INAM(3) = 2H11
0251            IF ( L .EQ. 12) INAM(3) = 2H12
0252            CALL OPEN(IDCB,IERR,INAM,IOPTN,ISECU,ICR,IDCBS)
0253            JJ = 2
0254            IF ( IERR .LT. 0 )  WRITE (1,990) JJ,IERR
0255            CALL WRITF(IDCB,IERR,ARRAYA,IL)
0256            JJ = 3
0257            IF ( IERR .LT. 0 )  WRITE (1,990) JJ,IERR
0258            CALL CLOSE(IDCB,IERR,0)
0259            JJ = 4
0260            IF ( IERR .LT. 0 )  WRITE (1,990) JJ,IERR
0261            ISP = ATOD(L) + 88
0262            IF ( L .GT. 10 ) ISP = ISP + 1
0263            SP = OLCAL(1,ISP) * 100000.0
0264            WRITE(6,610)  KU(L),ATOD(L),INAM,N,BP,MAX1,MIN1,AVG1,
0265       1          MAX2,MIN2,AVG2,AVG,SP
0266   610      FORMAT(10X,F4.1,I4,1X,3A2,I5,F5.1,8(3X,F6.1),/)
0267   620   CONTINUE
0268         OLCAL(1,254) = BP
0269         OLCAL(1,253) = N
0270         OLCAL(1,194) = GAIN
0271         OLCAL(2,224) = SCANR(08,39,01)
0272         OLCAL(2,225) = PATM
0273  C
0274  C -------------- "700" --------------- ON-LINE CALIBRATION ------------
0275  C
0276    700 IF ( ICAL .NE. 2 ) GO TO 750
0277         WRITE (6,702)
0278    702 FORMAT(1H1)
0279         WRITE(6,310) RUN,ICAL
0280         CALL WKOLC (ICAL,OLCAL,KU,KUNUM)
0281         ICAL = 1
0282         CALL OPEN(IDCB,IERR,JNAM,IOPTN,ISECU,ICR,IDCBS)
0283         JJ = 6
0284         IF( IERR .LT. 0 ) WRITE(1,990)  JJ,IERR
0285         CALL WRITF(IDCB,IERR,OLCAL,JL)
0286         JJ = 7
0287         IF( IERR .LT. 0 ) WRITE(1,990)  JJ,IERR
0288         CALL CLOSE(IDCB,IERR,0)
0289         JJ = 8
0290         IF( IERR .LT. 0 ) WRITE(1,990)  JJ,IERR
0291  C
0292    750  WRITE (1,760)
0293    760  FORMAT(" ONE PASS IS COMPLETE, IF YOU WANT TO CONTINUE:",/,
0294        1 "ENTER 1.....................TO EXIT ENTER 0")
0295         READ(1,*) IGO
0296         PASS = PASS + IGO
0297         IF ( IGO .NE. 0 ) GO TO 100
0298         GOTO 900
```

```
0299  C
0300  C -------------- "800" --------------- ERROR PROCESSING SECTION -------
0301  C
0302   800  CALL ABREG(IA,IB)
0303        WRITE (1,810) IA,IB
0304   810  FORMAT("ERROR RETURNED FROM EXEC ",I3,"CALL:"
0305       1   ,/,     "  A-REGISTER = ",I6," (ASCII CODE FOR ERROR TYPE)"
0306       2   ,/,     "  B-REGISTER = ",I6," (ASCII CODE FOR ERROR NUMBER)")
0307        IF (ICODE .EQ. 9) GO TO 530
0308        GO TO 550
0309   900  STOP
0310   990  FORMAT("ERROR FROM ",I3, "  ERROR # :  ",I4)
0311  C ---------------- "1000" ----------------- END MAIN WKAQN
0312        END
0313  C ***************************************************************************
```

A.3 SUBROUTINE--WKOLC

A.3.1 Description of WKOLC

The subroutine WKOLC is used to perform the on-line calibration. An on-line calibration is conducted prior to and after unsteady pressure data acquisition to establish the correct pressure versus voltage relationship produced by the Kulite transducers. This relationship is linear as demonstrated by Paige [Ref. 7]. Although linear, the slope and absolute magnitude of the pressure-voltage curve changes with temperature. Thus a calibration must be made while the transducer is at the same temperature at it is for the acquisition of unsteady pressure data. Thus, calibration is conducted just prior to data acquisition as well as just after acquisition to ensure that this relationship does not change during the acquisition.

The static pressure measured by a Kulite transducer is really a difference between the actual static pressure in the compressor and a reference pressure, PKR, applied on the back of the Kulite diaphram (Fig. 4). At a given temperature, the unsteady pressure-voltage relationship can be represented by:

$$P = A0 + A1 \cdot e + PKR \qquad (A3\text{-}1)$$

Solving for Kulite voltage:

$$e = -A0/A1 + 1/A1 \cdot P - 1/A1 \cdot Pav \qquad (A3\text{-}2)$$

If the static pressure is constant, the first two terms can be combined into a single constant of the form:

$$K2 = -A0/A1 + 1/A1\ Pav \qquad (A3\text{-}3)$$

Then equation A3-2 becomes:

$$e = K2 + K1 \cdot PKR \qquad (A3\text{-}4)$$

where K1 = -1/A1. The Kulite reference pressure, PKR, can be set and the corresponding Kulite voltage, e, can be recorded. Then a different PKR is applied and its corresponding voltage is recorded. The result is set of data points which can be plotted and a linear curve-fitting routine can be applied to determine the actual slope and intercept. The method used was a least-squares curve fitting procedure. Since each Kulite behaves a little differently, a slope and intercept is recorded for each one.

The temperature is assumed constant since the whole process takes only a few seconds. Although the static pressure is changing continuously, a time averaged static pressure remains constant at each wall location. As described in chapter 2, the voltage read through the digital voltmeter is essentially an average pressure. The pneumatic ports have been calibrated to be very precise, therefore, they are assumed correct and the kulite average pressure is biased to agree with the pneumatic. The pressure Pav and PKR are known for several corresponding voltages, (up to six) and thus A1 and A0 are known for each kulite. The kulite reference pressure is then set at a specific value, (usually atmospheric pressure), then for any Kulite voltage recorded,

a corresponding accurate pressure can be obtained using equation (A3-1). (See Figure A-1)

The function SCANR is used to select scanner channels and read the values from either the DVM or the counter. The arguments of the function are the logic unit of the scanner, the scanner channel, and the instrument code.

(1=DVM, 2=counter)

After the calibration points are recorded, steady state pneumatic pressures and flow parameters are recorded. The function ACQN is used to select and read the scanivalves which measure the pressures at the pneumatic ports. The arguments include the scanivalve number, scanivalve port number, and time delay factor. The port assignments are listed in Table III of the main report.

The flow data are converted to common units for output to the printer. Specific conversions are discussed in section A.2.

The subroutine section "400" converts slopes, -K1, and intercepts, K2, to A1 and A0 which are used in equation A3-1. The variable zero is correction obtained by reading the output of the transducer when equal pressure is applied to both sides. The resulting differential output, which should be zero, is subtracted from all scanivalve measurements. As before, the scaling factor 100000.0 is

applied to pneumatic measurements and 10000.0 is applied to Kulite measurements.

The values of the slopes and intercepts are stored in the OLCAL array and the array is returned to the main program.

A.3.2 Nomenclature for Subroutine WKOLC

A0	real	E=0 intercept of P-e curve
A1	real	E=0 slope of p-e curve
DT00	real	Temperature at flow nozzle
DTA4	real	Temperature
DTB4	real	Temperature
DTC4	real	Temperature
DUM	real	Dummy variable
E(12)	real	Kulite voltage
GO	integer	Index to commence calibration
ICAL	integer	Identifies calibration =1 before, =2 after
INCPT(12)	integer	Array of A0 intercepts
INDEX	integer	Increments column number for printout
I150	integer	Changes A/D channel (2-13) to Kulite number (1-12)
I155	integer	Identifies scanner channel
I175	integer	Identifies column number in OLCAL
I410	integer	Column number of PKR's
I420	integer	Column number of each Kulite voltage read for each PKR in I410
JEND	integer	Total of points for calibration
K0	real	P=0 intercept of P-e curve
K1	real	Slope of curve-fit, K1 = -1/A1
K2	real	Intercept of curve-fit
KU(12)	real	Kulite transducer channels
KUNUM	integer	Total of Kulites (usually 12)
OLCAL(2,256)	real	Data array for calibration, steady state and flow measurements
Pav	real	Average pressure
PKR(6)	real	Kulite reference pressure
P1NC	real	Pressure into flow nozzle
P2NC	real	Pressure out of flow nozzle

PTOO	real	Total pressure in tunnel
SLOPE(12)	real	Array of a1 slopes
SUMDUM	real	Summer for PKR averaging
SUM1-5	real	Summer for temperature averaging
TT	real	Total temperature
ZERO	real	Pa-Pa differential on scanivalve

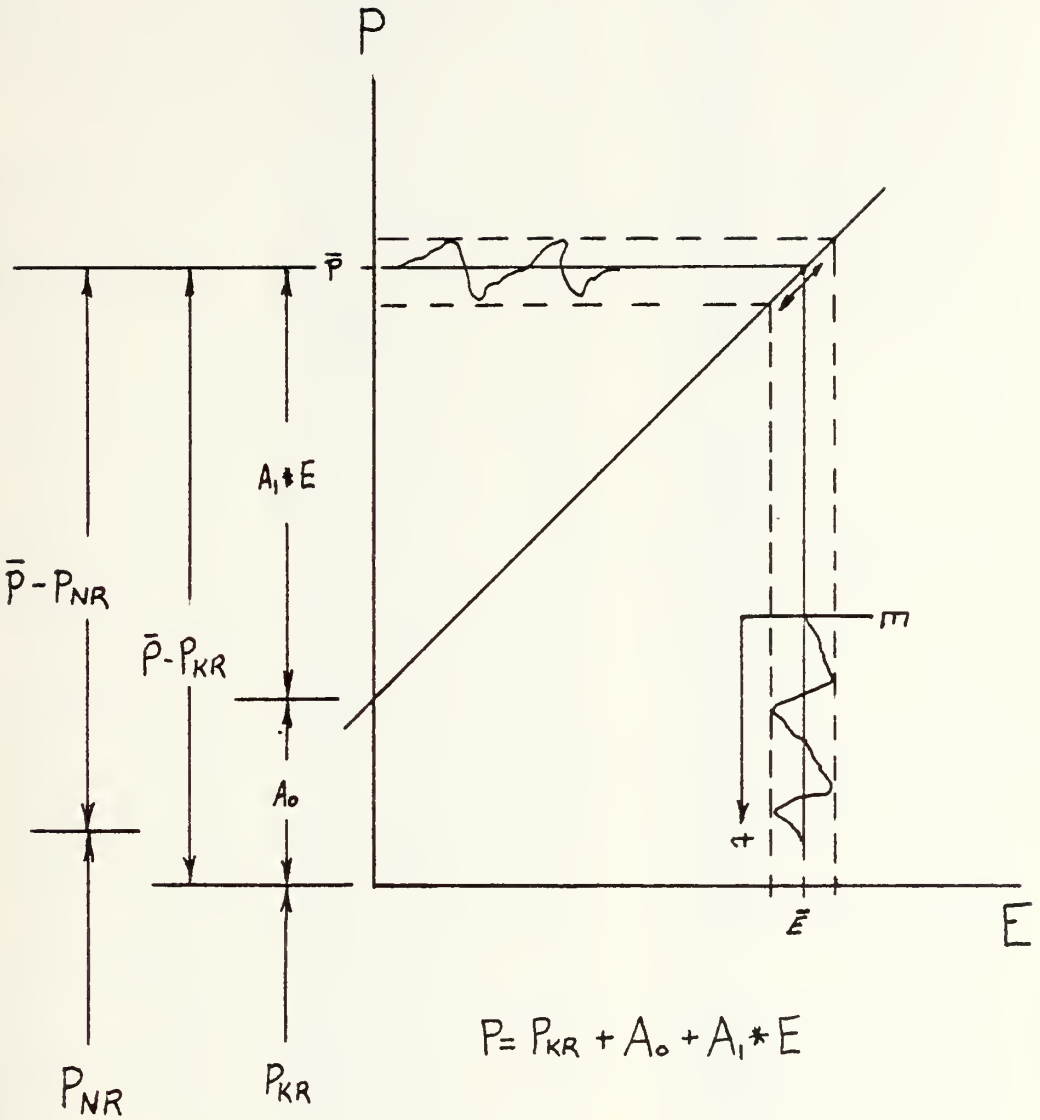

Figure A.2 Pressure-Kulite Voltage Relationship

COLUMN →	1	2 - 13	14-26	27-39	40-52	53-65	66-78	79	80	81	82	83	84
I.D.	PKR_1	KULITE VOLTAGES K6 - K13 SCANNER #2 40-51	CAL PT. 2	CAL PT. 3	CAL PT. 4	CAL PT. 5	CAL PT. 6	$P_A - P_A$	$P_{CAL} - P_A$	JEND	$P_1 - P_A$	$P_2 - P_A$	$P_{T_{00}}$
Row 1 PORT	SC1		SC1 SC#2	SC1 SC#2	SC1 SC#2	SC1 SC#2	SC1 SC#2	SV#1	SV#1	—	SV#1	SV#1	SV#1
/CH	39		39 40-51	39 40-51	39 40-51	39 40-51	39 40-51	1	2		3	4	5
Row 2 X-INDICATES REPEAT OF ROW 1	×	×	×	×	×	×	×	×	×	×	×	×	×

85-89	90	91	92	93	94	95	96	97	98	99	100	101	102	103	104	105	106	107	108	109	110
$P_{S1} - P_{S5}$	P_{S6}	P_{S7}	$P_{S7.5}$	P_{S8}	$P_{S8.5}$	P_{S9}	$P_{S9.5}$	P_{S10}	$P_{S10.5}$	P_{S12}	$P_{S11.5}$	P_{S12}	P_{S13}	RPM	BLADE FREQ	$T/_{NC}$	$T_{t_{00}}$	ΔT_{A4}	ΔT_{B4}	ΔT_{C4}	P_{ATM}
SV#1	SV#1	SV#1	SV#1	SV#1	SV#1	SV#1	SV#1	SV#1	SV#1	SV#1	SV#1	SV#1	SV#1	SC#1	SC#1	SC#2	SC#2	SC#2	SC#2	SC#2	
6,7,8,9,10	11	12	13	14	15	16	17	18	19	20	21	22	23	17	19	4	6	14	15	16	—
×	×	×	×	×	×	×	×	×	×	×	×	×	×	×	×	×	×	×	×	×	

111-180	181	182-193	194	195-223	224	225	226 - 237	238-249	250	251	252	253	254	255	256
	K_{UNUM}	KULITE CHANNEL NUMBERS	AMP GAIN		P_{KR}	P_{NR}	CALIBRATION SLOPES - A1	CALIBRATION INTERCEPTS - A_0	DATE	m		N	BP	PASS	RUN
	—	—	—		—	—	—	—	—	—		—	—	—	—
					×	×	×	×							

Figure A.3 OLCAL Array

```
&WKAQN T=00004 IS ON CR00028 USING 00126 BLKS R=0000

0313  C ***********************************************************************
0314        SUBROUTINE WKOLC(ICAL,OLCAL,KU,KUNUM)
0315  C     *  WALL-KULITE ON-LINE CALIBRATION                                 *
0316  C     *  PROGRAM USED FOR CALIBRATING KULITE PRESSURE TRANSDUCERS        *
0317  C     *  BY DETERMINING THE SLOPE AND INTERCEPT OF THE PRESSURE VS.      *
0318  C     *  KULITE VOLTAGE CURVE USING REFERENCE PRESSURES SET BY THE       *
0319  C     *  TECHNICIAN.  FOR MORE COMPLETE INFORMATION, SEE THESIS BY       *
0320  C     *  CORNELL, 1983.                                                  *
0321  C     *                  VER 7.0      10 AUG 1983          DWC          *
0322  C***********************************************************************
0323  C
0324  C                                        DECLARATIONS/DIMENSIONS
0325  C
0326        REAL OLCAL(2,256),PKR(6),E(6),ZERO,SLOPE(12),SUMDUM,DUM,A0,A1
0327        REAL INCPT(12),K1,K2,K0,KU(12),SUM1,SUM2,SUM3,SUM4,SUM5
0328        REAL TT,DT00,DTA4,DTB4,DTC4,P1NC,P2NC,PT00
0329        INTEGER JEND,GO,ICAL,KUNUM,IWK,INDEX
0330  C
0331  C                                        INITIALIZE ARRAY
0332  C
0333        IF (ICAL .EQ. 2 ) GO TO 100
0334        DO 20 I=1,2
0335           DO 10 J=1,256
0336              OLCAL(I,J)=0.0
0337    10    CONTINUE
0338    20  CONTINUE
0339  C
0340  C--------------- "100" ----------------TAKE REFERENCE PRESSURES AND
0341  C                                        WALL-KULITE PRESSURE DATA
0342  C
0343   100  WRITE(1,105)
0344   105  FORMAT("HOW MANY CALIBRATION POINTS WILL YOU USE? (6 IS MAX)")
0345        READ(1,*) JEND
0346        OLCAL(1,81) = FLOAT(JEND)
0347        INDEX = 1
0348        DO 160 J = 1,JEND
0349   110     WRITE(1,112) J
0350   112     FORMAT("WAIT UNTIL CAL PRESSURE ",I1," IS SET, THEN ENTER 1 ",
0351       1   /,"TO EXIT CALIBRATION ROUTINE,               ENTER 0 ")
0352           READ(1,*) GO
0353           IF ( GO   .EQ. 0) GOTO 500
0354           IF ( GO .NE. 1 )  GOTO 110
0355           CALL ABRT(7,2)
0356           CALL RMOTE(8)
0357           CALL RMOTE(10)
0358           CALL RMOTE(12)
0359           CALL RMOTE(15)
0360           WRITE(8,120)
0361   120     FORMAT("CA")
0362           WRITE(10,130)
0363   130     FORMAT("F1R7M3A1H0T3")
0364           WRITE(12,140)
0365   140     FORMAT("PF4G6T")
0366           WRITE(15,120)
0367  C                                        KULITE REFERENCE PRESSURE
0368  C                                        SCANNER #1, CHANNEL 39
0369           SUMDUM = 0.0
0370           DO 142 I = 1,5
```

```
0371              DUM = SCANR(08,39,01)
0372              SUMDUM = SUMDUM + DUM
0373   142      CONTINUE
0374            OLCAL(ICAL,INDEX) = SUMDUM / 5.0
0375            WRITE(6,145) J, OLCAL(ICAL,INDEX)
0376            INDEX = INDEX + 1
0377   145      FORMAT(//,24X,"CAL POINT -",I1,"- KU REF PRESS =",F9.6,//,34X,
0378       1       "KULITE VOLTAGES",//,30X,"KULITE",13X,"VOLTS")
0379   C
0380   C                                          WALL KULITE TRANSDUCERS
0381   C                                          SCANNER #2, CHNLS 40 TO 51
0382            DO 155 I=2,13
0383               I155=I+38
0384               SUMDUM = 0.0
0385               DO 150 K = 1,5
0386                  DUM = SCANR(15,I155,01)
0387                  SUMDUM = SUMDUM + DUM
0388   150         CONTINUE
0389               OLCAL(ICAL,INDEX) = SUMDUM / 5.0
0390               I150 = I - 1
0391               WRITE(6,151) KU(I150), OLCAL(ICAL,INDEX)
0392   151         FORMAT(30X,F4.1,12X,F9.6)
0393               INDEX = INDEX + 1
0394   155      CONTINUE
0395   160   CONTINUE
0396   C                                          TARES (PA - PA), (PCAL- PA)
0397   C                                          SCANIVALVE #1, PORTS 1 + 2
0398         OLCAL(ICAL,79)= ACQN(01,01,25)
0399         OLCAL(ICAL,80)= ACQN(01,02,25)
0400         WRITE(6,165) OLCAL(ICAL,79), OLCAL(ICAL,80)
0401   165   FORMAT(1X,//,17X,"TARE SV#1 =",F9.6,10X,"PCAL - PA =",F9.6,
0402        1    //,27X,"PNEUMATIC PRESSURES - S1 TO S13",/,37X,"VOLTS",/)
0403   C                                          COMPRESSOR NOZZLE P1 & P2
0404   C                                          SCANIVALVE #1, PORTS 3 + 4
0405         OLCAL(ICAL,82) = ACQN(01,03,25)
0406         OLCAL(ICAL,83) = ACQN(01,04,25)
0407   C                                          STAGNATION PRESSURE
0408   C                                          SCANIVALVE #1,PORTS 5
0409         OLCAL(ICAL,84) = ACQN(01,05,25)
0410   C                                          PNEUMATIC PRESSURES S1 TO S13
0411   C                                          INCLUDING 7.5,8.5,9.5,10.5+11.5
0412         DO 175 I=6,23
0413            I175=I+79
0414            OLCAL(ICAL,I175) = ACQN(01,I,25)
0415            WRITE(6,170) OLCAL(ICAL,I175)
0416   170      FORMAT(35X,F9.6)
0417   175   CONTINUE
0418   C
0419   C -------------- "200" --------------- ACQUIRING REMAINING OLC DATA
0420   C
0421   C                                          RPM & BLADE FREQUENCY
0422   C                                          SCANNER #1, CHANNELS 17 + 19
0423         OLCAL(ICAL,103) = SCANR(08,17,02)
0424         OLCAL(ICAL,104) = SCANR(08,19,02)
0425   C                                          COMPRESSOR TEMPERATURES
0426   C                                          SCANNER #2 , CHANNELS 4,6,14-16
0427         SUM1 = 0.0
0428         SUM2 = 0.0
0429         SUM3 = 0.0
0430         SUM4 = 0.0
```

```
0431         SUM5 = 0.0
0432         DO 250 I = 1,5
0433            DUM = SCANR(15,04,01)
0434            SUM1 = SUM1 + DUM
0435            DUM = SCANR(15,06,01)
0436            SUM2 = SUM2 + DUM
0437            DUM = SCANR(15,14,01)
0438            SUM3 = SUM3 + DUM
0439            DUM = SCANR(15,15,01)
0440            SUM4 = SUM4 + DUM
0441            DUM = SCANR(15,16,01)
0442            SUM5 = SUM5 + DUM
0443    250  CONTINUE
0444         OLCAL(ICAL,105) = SUM1 / 5.0
0445         OLCAL(ICAL,106) = SUM2 / 5.0
0446         OLCAL(ICAL,107) = SUM3 / 5.0
0447         OLCAL(ICAL,108) = SUM4 / 5.0
0448         OLCAL(ICAL,109) = SUM5 / 5.0
0449   C
0450   C ------------ "300" ----------------- PRINTING FLOW DATA
0451         RPM = OLCAL(ICAL,103) * 10.
0452         TT = ( OLCAL(ICAL,105) * 1000. * 34.7279 + .6149) * 5./9. +273.15
0453         DT00 = OLCAL(ICAL,106) * 1000. * 34.7279 +  .6149 * 5./9. + 273.15
0454         DTA4 = OLCAL(ICAL,107) * 1000. * 34.7279 +.6149 * 5. / 9. + 273.15
0455         DTB4 = OLCAL(ICAL,108) * 1000. * 34.7279 + .6149 * 5./9. + 273.15
0456         DTC4 = OLCAL(ICAL,109) * 1000. * 34.7279 + .6149 * 5./9. + 273.15
0457         P1NC = ( OLCAL(ICAL,82) - OLCAL(ICAL,79) )* 100000. + PATM
0458         P2NC = ( OLCAL(ICAL,83) - OLCAL(ICAL,79) )* 100000. + PATM
0459         PT00 = ( OLCAL(ICAL,84) - OLCAL(ICAL,79) )* 100000. + PATM
0460         WRITE(6,310) RPM,OLCAL(ICAL,104),TT,DTA4,DT00,DTB4,DTC4
0461    310  FORMAT(1X,/,22X,"RPM =",F8.2,5X,"BLADE FREQUENCY =",F6.1,//,
0462        1   30X,"COMPRESSOR TEMPERATURES",/,35X,"DEGREES KELVIN",/,
0463        2   20X,"T1 - NC    =", F7.3,
0464        3   5X,"DEL T A4  =",F7.3,/,20X,"DELTA T00 =",F7.3,5X,
0465        4   "DEL T B4  =",F7.3,/,43X,"DEL T C4  =",F7.3,//)
0466         WRITE(6,320) P1NC,P2NC,PT00
0467    320  FORMAT(32X,"COMPRESSOR PRESSURES",/,33X,"(INCHES OF WATER)",/,
0468        1   32X,"P1-PA     =",F7.3,/,32X,
0469        1   "P2-PA     =",F7.3,/,32X,"PT00      =",F7.3)
0470   C
0471   C--------------- "400" --------------- CALCULATION FOR DETERMINING SLOPE
0472   C                                       AND INTERCEPT OF PRESSURE VS KULIT
0473   C                                       CURVE--( A0,A1 )
0474    400  DO 490 K = 1,KUNUM
0475            DO 430 J = 1,JEND
0476               ZERO = OLCAL(ICAL,79)
0477               I410 = (J-1)*13 + 1
0478               PKR(J) = ( OLCAL(ICAL,I410) - ZERO ) * 100000.0
0479               I420 = (J-1)*13 + 1 + K
0480               E(J) = OLCAL(ICAL,I420) * 10000.0
0481    430     CONTINUE
0482            CALL CURFT(JEND,PKR,E,K1,K2)
0483   C
0484   C                                       CHANGE INCPT TO A0, SLOPE TO A1
0485            IF ( K .EQ. 11 ) I = 101
0486            IF ( K .EQ. 12 ) I = 102
0487            IF ( K .LT. 11 ) I = K + 89
0488            PAV = ( OLCAL(ICAL,I) - ZERO ) * 100000.0
0489            K0 = K2 - K1 * PAV
0490            A1 = - 1.0/ K1
```

```
0491            A0 = -K0 * A1
0492            SLOPE(K) = A1
0493            INCPT(K) = A0
0494            WRITE(6,495)  KU(K), SLOPE(K), INCPT(K)
0495    490   CONTINUE
0496    495   FORMAT(10X," KULITE NO.",F5.1,5X,"SLOPE A1 =",F6.3,5X,
0497         1    "INTERCEPT A0 =",F6.3,/)
0498  C
0499  C--------------- "500" --------------- STORE SLOPES,INTERCEPTS AND END
0500    500   DO 520 I=1,KUNUM
0501            I520 = 225 + I
0502            I525 = 237 + I
0503            OLCAL(ICAL,225+I) = SLOPE(I)
0504            OLCAL(ICAL,237+I) = INCPT(I)
0505    520   CONTINUE
0506          RETURN
0507  C ------------------------------------ END OF SUBROUTINE &WKOLC -----
0508          END
0509  C ********************************************************************** C
```

A.4 SUBROUTINE--CURFT

A.4.1 Description of CURFT

This subroutine is called by WKOLC to calculate the slope and intercept of a line fit through the calibration points of Kulite voltage, e, and reference pressure, PKR. The method of least squares is used to fit the curve. [Ref. 21]

The object of the curve fitting is to minimize the distance between the data points and the corresponding points on the line. The least squares criterion minimizes the sum of the squares of the distances (e-e') for each PKR. (See Figure A.4)

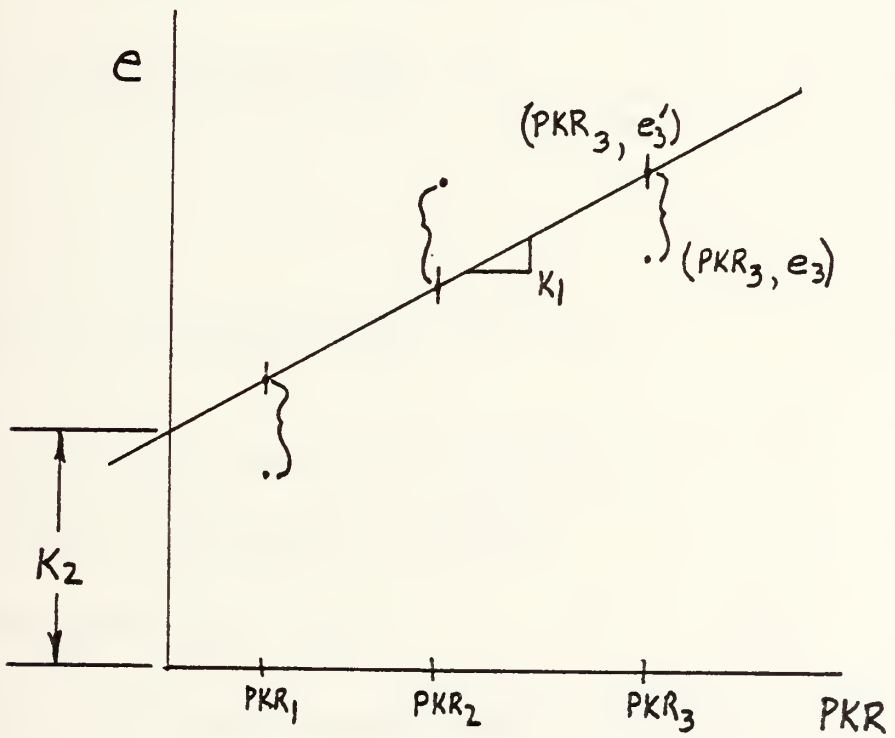

Figure A.4 Least Squares Scheme

The sum to be minimized can be written:

$$S = \sum_{i=1}^{J} (e_i - e_i')^2 \qquad \text{(A4-1)}$$

where J is the total number of data points. Using the relationship between Kulite voltage and PKR from equation (A3-3), the sum becomes:

$$S = \sum_{i=1}^{J} (e_i - K_2 + K_1 \cdot PKR_i) \qquad \text{(A4-2)}$$

The minimum is found by differentiating the equation partially with respect to K1 and then K2, and setting each partial derivative equal to zero, thus:

$$\frac{\partial S}{\partial K_1} = 2 \sum_{i=1}^{J} (e_i - K_2 + K1 \cdot PKR_i) = 0 \qquad \text{(A4-3a)}$$

and

$$\frac{\partial S}{\partial K_2} = 2 \sum_{i=1}^{J} (e_i - K_2 + K1 \cdot PKR_i)(-1) = 0 \qquad \text{(A4-3b)}$$

The resulting equations are simplified to:

$$(\Sigma PKR_i^2)K1 + (\Sigma PKR_i)K2 = \Sigma e_i \cdot PKR_i \qquad \text{(A4-4a)}$$

$$(\Sigma PKR_i)K1 + J \cdot K2 = \Sigma e_i \qquad \text{(A4-4b)}$$

These equations can be solved simultaneously for K1 and K2 with the following results:

$$\text{slope } K_1 = \frac{J(\Sigma(PKR_i - e_i)) - \Sigma PKR_i \Sigma e_i}{J \cdot \Sigma(PKR_i)^2 - (\Sigma PKR_i)^2} \qquad \text{(A4-5a)}$$

$$\text{intercept } K_2 = \frac{\Sigma e_i - \Sigma PKR_i \cdot K1}{J} \qquad \text{(A4-5b)}$$

A.4.2 Nomenclature & Listing for Subroutine CURFT

E(6)	real	Kulite voltages
FJEND	real	Floating point value of JEND
JEND,J	integer	Number of calibration points
K1	real	Slope of curve-fit
K2	real	Intercept of curve-fit
PKR(6)	real	Kulite reference pressure
SUMKV	real	Summer for Kulite voltages
SUMPR	real	Summer for reference pressures
SUMXX	real	Sum of PKR's squared
SUMXY	real	Sum of (PKR * e)'s

```
&WKAQN T=00004 IS ON CR00028 USING 00126 BLKS R=0000

0509  C ********************************************************************** C
0510        SUBROUTINE CURFT(JEND,PKR,E,K1,K2)
0511  C *      USED WITH WKOLC TO CALCULATE SLOPE AND INTERCEPTS FOR WALL * C
0512  C *      KULITE ON-LINE-CAL.  USES LEAST SQUARES APPROXIMATION      * C
0513  C *                                    1 AUG 1983              DWC    * C
0514  C ********************************************************************** C
0515  C *
0516  C                                          DIMENSIONS
0517        REAL PKR(6),E(6),K1,K2,FJEND
0518        INTEGER JEND
0519  C                                          INITIAL  VALUES
0520        SUMPR = 0.0
0521        SUMKV = 0.0
0522        SUMXY = 0.0
0523        SUMXX = 0.0
0524  C                                          SUMMATIONS
0525        DO 20 I = 1,JEND
0526           SUMPR = SUMPR + PKR(I)
0527           SUMKV = SUMKV + E(I)
0528           SUMXY = SUMXY + PKR(I) * E(I)
0529           SUMXX = SUMXX + PKR(I) * PKR(I)
0530     20 CONTINUE
0531  C                                          CALCULATION OF SLOPE
0532        FJEND = FLOAT(JEND)
0533        K1 = ((FJEND*SUMXY - SUMKV*SUMPR)/(FJEND*SUMXX - SUMPR*SUMPR))
0534        K2 = (SUMKV - SUMPR * K1) / FJEND
0535        RETURN
0536        END
0537  C ********************************************************************** C
```

A.5 SUBROUTINE--WKPAC

A.5.1 Description of WKPAC

This subroutine, an adaptation of the subroutine RPACE by McCarville [Ref. 11], triggers the A/D converter at the correct time to read the Kulite voltages. The number of counts delay (IBLADE) from the 1 per rev reset pulse is set to account for the blade pair selected, the one-to-256 blade-to-blade position, the physical location of the Kulite transducers in the case wall, and the initial delay from the optical trigger to the first blade pair. The actual software drivers for the PACER and A/D are hidden in the EXEC library routines. The use of drivers can be found in McCarville or the Hewlett-Packard Reference Manuals. [Ref. 22, Ref. 23]

The first subroutine, EXEC(3,19), clears the PACER. The next, EXEC(1,19,IRPM,1,IBLADE), passes the value of IBLADE to the PACER and reads the frequency counter in the PACER for the number of computer clock pulses between one-per-rev triggers. The output, IRPM, is not a direct measure of the speed of the compressor but must be divided into by 15 x 10 to obtain units of RPM. Therefore, RPM is reqd directly from a magnetic pulse counter. However, this call is necessary for the next EXEC to work.

The last call, EXEC(1,10,IBUFF,N,ADCHL,0), is the routine that selects the identified A/D channel and reads the N data samples at the location specified by IBLADE.

When the three values of the sample set calculated by WKRMS and the sample set average are stored in ARRAYA, the procedure is repeated for each of the 256 locations.

2.5.2 Nomenclature & Listing for Subroutine WKPAC

ADCHL	integer	A/D channel number
ARRAYA(4,256)	real	Array of unsteady Kulite data
BP	integer	Blade pair selected
IBLADE	integer	Delay parameter to trigger A/D
IBUFF(99)	integer	Buffer array for N samples
IKON	binary	Sets no abort bit
IO	integer	Initial dealy from one-per-rev trigger to first blade pair
IOFFS	integer	Delay added for transducer location
IRPM	integer	Counts between one-per-rev triggers
MASK	binary	Used to eliminate non-significant figures coded by A/D
MAX	real	Maximum value of sample set
MIN	real	Minimum value of sample set
N	integer	Number of Kulite samples taken at each of the 256 blade-to-blade locations
RMS	real	Root-mean-square value of sample set
SAMP(99)	real	Floating point array of samples
SUMPR	real	Sum of samples

```
&WKAQN T=00004 IS ON CR00028 USING 00126 BLKS R=0000

0537  C ********************************************************************* C
0538        SUBROUTINE WKPAC(ADCHL,N,BP,ARRAYA)
0539  C     USED WITH WKAQN TO ACQUIRE WALL-KULITE DATA ON THE TRANSONIC  C
0540  C     COMPRESSOR.  FOR MORE, SEE CORNELL, NPS THESIS, 1983.         C
0541  C                     VER 3.0       19 JUL 1983              DWC    C
0542  C ********************************************************************* C
0543  C
0544  C                                      DIMENSIONS
0545  C
0546        INTEGER ADCHL,IBLADE,BP,PLOTLU,IOFFS,N,IBUFF(99),IO
0547        REAL    ARRAYA(4,256),SUMPR,SAMP(99)
0548        REAL    MAX,MIN,RMS
0549  C
0550  C -------------- "100" --------------- DATA AND INITIAL VALUES
0551  C
0552        DATA MASK/177700B/
0553        DATA IOFFS/0/
0554        DATA IKON/100000B/
0555  C
0556  C                   VALUE OF IOFFS TRIGGER CORRECT POSITION OF KULITES
0557  C                   TO ENSURE MEASUREMENTS BEHIND SAME BLADE ROW.
0558  C                   IO INDICATES THE DIFFERENCE FROM A PROBE TO THE
0559  C                   WALL KULITE MEASUREMENT PLANE.
0560        IO = 256
0561        IOFFS = IO
0562        IF ( ADCHL .EQ. 6 .OR. ADCHL .EQ. 10 ) IOFFS = IO + 640
0563        IF ( ADCHL .EQ. 4 .OR. ADCHL .EQ. 8  ) IOFFS = IO + 576
0564        IF ( ADCHL .EQ. 3 .OR. ADCHL .EQ. 7  ) IOFFS = IO + 64
0565        IF ( ADCHL .EQ. 11 .OR. ADCHL .EQ. 13 ) IOFFS = IO + 64
0566  C
0567  C -------------- "200" --------------- ACQUISITION
0568   200  CONTINUE
0569        DO 250 J = 0,255
0570           IBLADE=  256*( BP-1) + J + IOFFS + IKON
0571           CALL EXEC (3,19)
0572           CALL EXEC (1,19,IRPM,1,IBLADE)
0573           CALL EXEC (1,20,IBUFF,N ,ADCHL,0)
0574  C
0575           SUMPR = 0.0
0576           DO 230 K = 1,N
0577              IBUFF(K) = IAND(IBUFF(K),MASK)
0578              SAMP(K)  = FLOAT(IBUFF(K))/ 32768.0
0579              SUMPR = SUMPR + SAMP(K)
0580     230   CONTINUE
0581  C
0582           CALL WKRMS(N,SAMP,SUMPR,MAX,MIN,RMS)
0583           ARRAYA(1,J+1) = SUMPR / FLOAT(N)
0584           ARRAYA(2,J+1) = RMS
0585           ARRAYA(3,J+1) = MAX
0586           ARRAYA(4,J+1) = MIN
0587     250 CONTINUE
0588        RETURN
0589  C ---------------------------------- END SUBROUTINE WKPAC ********
0590        END
0591  C  ********************************************************************* C
```

A.6 SUBROUTINE--WKRMS

A.6.1 Description of WKRMS

This subroutine takes the array of sampled pressures from WKPAC and calculates the maximum, minimum, and root-mean-square (RMS) values of the sample set. The RMS is used to examine the stability of the pressure measurements at each point. Without the RMS value, a spike in the data would cause a large difference between the maximum or minimum and the average value. An observer would be unable to tell whether the entire data set fluctuated greatly, or just one sample. A low RMS value would indicate that the data is stable, while a large RMS value would indicate that the flow was fluctuating at that point.

The subroutine determines maximum and minimum by logical comparison. The root-mean-square value is determined from the following equation. [Ref. 24]

$$\sigma = \sqrt{\frac{\Sigma(P-Pav)^2}{N}} \qquad \text{(A6-1)}$$

where P is a sampled pressure, Pav is the average pressure of the sample set (SUMPR/N), and N is the number of samples taken.

The three parameters are returned to WKPAC for storage in ARRAYA.

A.6.2 Nomenclature & Listing for Subroutine WKRMS

FN	real	Floating point value of N
MAX	real	Maximum value of sample set
MIN	real	Minimum value of sample set
N	integer	Number of Kulite samples taken each of the 256 blade-to-blade locations
RMS	real	Root-mean-square value of samples
SAMP(99)	real	Floating point array of samples
SUM	real	Sum of the mean-squares
SUMPR	real	Sum of samples

```
&WKAQN T=00004 IS ON CR00028 USING 00126 BLKS R=0000

0591  C  ********************************************************************** C
0592           SUBROUTINE WKRMS(N,SAMP,SUMPR,MAX,MIN,RMS)
0593  C *        USED WITH &WKAQN TO CALCULATE MAXIMUM, MINIMUM, AND RMS     * C
0594  C *        OF WALL-KULITE PRESSURE MEASUREMENTS FOR THE TRANSONIC      * C
0595  C *        COMPRESSOR.  FOR MORE COMPLETE DESCIPTION, SEE CORNELL,     * C
0596  C *        NPS THESIS, 1983.                                           * C
0597  C *                  VER 2.0      JUL 1983                    DWC     * C
0598  C ********************************************************************** C
0599  C     .
0600  C                                          DIMENSIONS
0601          REAL MAX,MIN,RMS,SUM,SAMP(99),SUMPR,FN
0602          INTEGER N
0603  C                                          INITIAL VALUES
0604          FN = FLOAT (N)
0605          MAX = SAMP(1)
0606          MIN = SAMP(1)
0607          SUM  = (SAMP(1) - SUMPR/FN)**2
0608  C                                          CALCULATIONS
0609          DO 10 I = 2,N
0610             IF ( SAMP(I) .GT. MAX )  MAX = SAMP(I)
0611             IF ( SAMP(I) .LT. MIN )  MIN = SAMP(I)
0612             SUM = SUM + (SAMP(I) - SUMPR/FN)**2
0613    10    CONTINUE
0614          RMS = SQRT(SUM/FN)
0615          RETURN
0616  C ---------------------------------- END SUBR WKRMS ---------------- C
0617          END
0618  C ********************************************************************** C
```

A.7 SUBROUTINE--XTREM

A.7.1 Description of XTREM

This subroutine is called by the main program to calculate parameters of the unsteady pressure acquisition to be output to the printer. It determines the maximum, minimum, and average values of the already averaged data for each of the two blade passages covered. The "1" values, corresponding to the first blade passage of the data set, are calculated from ARRAYA columns 1 to 128. The "2" values, corresponding to the second blade passage, use columns 129 to 256.

After the sum and extreme values are calculated, the routine converts the pressure values to units of inches of water using the following equation.

$$P(\text{in.}H_2O) = P(\text{volts}) * 100000.0/GAIN \qquad (A7\text{-}1)$$

where 100000.0 is the scaling factor and GAIN is the voltage gain of the Datel amplifiers. (Currently set at 40).

A listing of the remaining functions used in the program is also provided.

A.7.2 Nomenclature & Listing for Subroutine XTREM

AVG1,AVG2	real	Average pressure across 1st, 2nd blade passage
GAIN	real	Voltage gain of Datel amplifiers
MAX1,MAX2	real	Maximum pressure across 1st, 2nd blade passage.
MIN1,MIN2	real	Minimum pressure across 1st, 2nd blade passage
PLT(256)	real	Array of averaged Kulite data
SUM1,SUM2	real	Sum of averaged pressure across one blade passage

```
&WKAQN T=00004 IS ON CR00028 USING 00126 BLKS R=0000

0618  C ********************************************************************** C
0619        SUBROUTINE XTREM (PLT,MAX1,MAX2,MIN1,MIN2,AVG1,AVG2,GAIN)
0620  C *      USED WITH WKPAC AS ROUGH INDICATION WHETHER BOTH WAVEFORMS  * C
0621  C *      ARE ACQUIRED CORRECTLY.  FINDS MAXIMUM,MINIMUM, AND AVERAGE * C
0622  C *      VALUES OF WAVEFORMS, AND RETURNS IN INCHES OF WATER.        * C
0623  C *                              MARCH 1983                    DWC    * C
0624  C ********************************************************************** C
0625  C
0626  C                                          DIMENSIONS
0627        REAL PLT(256),MAX1,MIN1,MAX2,MIN2,SUM1,SUM2,AVG1,AVG2
0628  C                                          INITIAL VALUES
0629        MAX1 = -2000000.0
0630        MAX2 = MAX1
0631        MIN1 = - MAX1
0632        MIN2 = - MAX1
0633        SUM1 = 0.0
0634        SUM2 = SUM1
0635  C                                          CALCULATIONS
0636        DO 10 I = 1,128
0637           IF (PLT(I) .GT. MAX1)   MAX1 = PLT(I)
0638           IF (PLT(I) .LT. MIN1)   MIN1 = PLT(I)
0639           SUM1 = SUM1 + PLT(I)
0640    10  CONTINUE
0641        MAX1 = MAX1 * 10000. / GAIN
0642        MIN1 = MIN1 * 10000. / GAIN
0643  C
0644        DO 20 J = 129,256
0645           IF (PLT(J) .GT. MAX2)   MAX2 = PLT(J)
0646           IF (PLT(J) .LT. MIN2)   MIN2 = PLT(J)
0647           SUM2 = SUM2 + PLT(J)
0648    20  CONTINUE
0649        MAX2 = MAX2 * 10000.0 / GAIN
0650        MIN2 = MIN2 * 10000.0 / GAIN
0651        AVG1 = SUM1 / 128.0 * 10000.0 / GAIN
0652        AVG2 = SUM2 / 128.0 * 10000.0 / GAIN
0653        RETURN
0654        END
0655  C ********************************************************************** C
```

```
: &WKAQN T=00004 IS ON CR00028 USING 00126 BLKS R=0000

0655  C ********************************************************************** C
0656        REAL FUNCTION ACQN(IVALVE,IADES,IW)
0657  C *           THIS PROGRAM POSITIONS S/V "IVALVE" TO PORT             * C
0658  C *           "IADES" AND DEFINES ACQN=DVM VOLTAGE.  A DELAY          * C
0659  C *           OF (IW*10) MILLISECONDS OCCURS BETWEEN PORT             * C
0660  C *           SELECTION AND VOLTAGE MEASUREMENT.                      * C
0661  C ********************************************************************** C
0662  C
0663        IF(IVALVE.LT.1 .OR. IVALVE.GT.5) GO TO 900
0664        IF(IADES .LT.1 .OR. IADES .GT.48)GO TO 900
0665        ISTEP=1
0666        IF(IVALVE.EQ.2 .OR. IVALVE.EQ.3) ISTEP=2
0667  10    IAPR = IPORT(IVALVE)
0668        IDEL = IADES-IAPR
0669        IF(IDEL) 100,200,300
0670  C             --- HOME ---
0671  100   ICHAN = ICON(IVALVE,4)
0672        K=2
0673        GO TO 400
0674  C             --- READ ---
0675  200   ICHAN = ICON(IVALVE,9)
0676        K=3
0677        GO TO 400
0678  C             --- ADVANCE ---
0679  300   ICHAN = ICON(IVALVE,-1)
0680        K=1
0681  C             --- CONTROL ---
0682  400   CALL CNTL(ICHAN,IDEL,ISTEP,K)
0683        IF(K.NE.3) GO TO 10
0684  C             --- PAUSE & READ ---
0685        CALL WAIT(IW)
0686        WRITE(10,59)
0687  59    FORMAT("T3")
0688        READ(10,*)ACQN
0689        WRITE(8,60)
0690  60    FORMAT("C")
0691        RETURN
0692  C             --- PRINT ERROR MESSAGE ---
0693  900   WRITE(1,910)IVALVE,IADES
0694  910   FORMAT(5X,"BAD INPUT TO ACQN: IVALVE =",I4,"  IADES =",I4)
0695        STOP 1
0696        END
0697  C ********************************************************************** C
0698        SUBROUTINE CNTL(ICHAN,IDEL,ISTEP,K)
0699  C *           THIS PROGRAM CLOSES SCANNER CHANNEL "ICHAN"             * C
0700  C *           "IDEL" TIMES IN STEPS OF "ISTEP" BASED UPON             * C
0701  C *           PROGRAM OPTIONS SPECIFIED BY "K". (ICHAN MUST           * C
0702  C *           BE AN ASCII-CONVERTED INTEGER.)                         * C
0703  C ********************************************************************** C
0704        GO TO(100,200,300),K
0705  C
0706  100   DO 10 I=1,IDEL,ISTEP
0707        WRITE(8,60)ICHAN
0708        CALL WAIT(1)
0709        WRITE(8,62)
0710        CALL WAIT(15)
0711  10    CONTINUE
0712        RETURN
```

```
0713  C
0714  200    WRITE(8,60)ICHAN
0715         CALL WAIT(1)
0716         WRITE(8,62)
0717         CALL WAIT(400)
0718         RETURN
0719  C
0720  300    WRITE(8,60)ICHAN
0721         RETURN
0722  C
0723  60     FORMAT(A2)
0724  62     FORMAT("C")
0725         END
0726  C ************************************************************************ C
0727         INTEGER FUNCTION ICON(I,N)
0728  C ************************************************************************ C
0729         IC=I+N
0730         IF(IC.LT.10) GO TO 100
0731         CALL CODE
0732         WRITE(ICON,60)IC
0733  60     FORMAT(I2)
0734         RETURN
0735  100    ICON=IC+30060B
0736         RETURN
0737         END
0738  C ************************************************************************ C
0739         INTEGER FUNCTION IPORT (IVALVE)
0740  C ************************************************************************ C
0741         LU = 14 + 2100B
0742         CALL EXEC(2,LU,IVALVE*256,-1)
0743         CALL EXEC(1,LU,IP,-1)
0744         IP=IP/256
0745         MSD = IAND(IP/16,7B)
0746         LSD = IAND(IP,17B)
0747         IPORT = 10*MSD + LSD
0748         CALL ABRT(7,1)
0749         RETURN
0750         END
0751  C ************************************************************************ C
0752         REAL FUNCTION SCANR(LU,ICHAN,K)
0753  C *        THIS PROGRAM CLOSES RELAY 'ICHAN' ON SCANNER 'LU'           * C
0754  C *        AND READS THE INSTRUMENT INDICATED BY 'K'. (FROM TXCOU)     * C
0755  C *        **** NOTE: INSTRUMENT FUNCTION CODES MUST BE SET TO         * C
0756  C *       EXPECT REMOTE TRIGGERING PRIOR TO ENTERING THIS PROGRAM      * C
0757  C ************************************************************************ C
0758         WRITE(8,801)
0759         WRITE(15,1501)
0760         IC=ICON(ICHAN,0)
0761         WRITE(LU,101)IC
0762         GO TO(100,200) K
0763   100   CALL TRIGR (10)
0764         READ (10,   *) DUM
0765         CALL TRIGR (10)
0766         READ (10,   *) SCANR
0767         GO TO 300
0768   200   WRITE(12,1201)
0769         READ(12,   *)SCANR
0770   300   WRITE(LU,801)
0771   101   FORMAT (A2)
0772   801   FORMAT ("C")
```

```
0773  1001  FORMAT ("T3T3")
0774  1201  FORMAT ("T")
0775  1501  FORMAT ("C")
0776        RETURN
0777  60    FORMAT(A2)
0778  61    FORMAT("T3")
0779  62    FORMAT("C")
0780  63    FORMAT("T")
0781        END
0782  C ************************************************************************ C
0783        SUBROUTINE WAIT (N)
0784  C *           THIS PROGRAM USES THE HP-21MX SYSTEM CLOCK TO            * C
0785  C *           PRODUCE A DELAY OF (N*10) - MILLISECONDS.                * C
0786  C ************************************************************************ C
0787        DIMENSION IT(5)
0788        CALL EXEC (11,IT,IY)
0789        NM=IT(3)
0790        ITF=IT(1) + 100*IT(2) + N
0791   10   IF(ITF.LE.5999) GO TO 20
0792        NM=NM + 1
0793        ITF=ITF - 6000
0794        GO TO 10
0795   20   CALL EXEC (11,IT,IY)
0796        INOW=IT(1) + 100*IT(2)
0797        IF(ITF-INOW)30,30,20
0798   30   IF(NM-IT(3))99,99,20
0799   99   RETURN
0800  C  ************************** END OF FILE
0801        END
```

A.8 SON PROGRAM--WKPLT

A.8.1 Description of WKPLT

This program, used almost without change from the TPL program library, is called by the main program to plot the Kulite waveforms during the acquisition of unsteady data. The user is able to then evaluate whether the data is acceptable to store or whether the data should be retaken. The program offers the user the choice of the output device so that the waveform may be observed on the terminal and, if desired, it can be output to the plotter for a hard copy. The library subroutines and their parameters are described in the Hewlett-Packard Graphic Reference Manual. [Ref. 25]

2.8.2

```
: &WKPLT T=00004 IS ON CR00028 USING 00018 BLKS R=0000

0001  FTN4,L
0002        PROGRAM WKPLT
0003  C*************************************************************************
0004  C                                                                        *
0005  C     PROGRAM FOR PLOTTING THE AVERAGE KULITE WAVEFORMS                  *
0006  C                                                                        *
0007  C*************************************************************************
0008  C
0009  C  INITIALIZE VARIABLES AND RETRIEVE PASSED PARAMETERS
0010  C
0011        REAL DA(256),D(2,256),AR,VX1,VX2,VY1,VY2,RMAX,RMIN,DIV,AVG,PY
0012       *,    RKU(12)
0013        INTEGER J,ICOUNT,ID,LU,ICON,ICODE,IL,JUMP
0014        DIMENSION IGCB(192),IP(5)
0015        DATA D/512*0.0/
0016        DATA RKU/6.0,7.0,7.5,8.0,8.5,9.0,9.5,10.0,10.5,11.0,12.0,13.0/
0017        CALL RMPAR (IP)
0018        LU = IP(2)
0019        ICOUNT = IP(3)
0020        ICHAN = IP(4)
0021        DIV = 1.0
0022        AVG = 0.0
0023        ID = 1
0024        IF (LU .EQ. 13) ID = 2
0025        ICODE = 14 + 100000B
0026        IL = 512
0027        JUMP = 1
0028        CALL EXEC (ICODE,1,DA,IL)
0029        GO TO 400
0030     10 JUMP = JUMP + 1
0031        RMAX = DA(1)
0032        RMIN = RMAX
0033        DO 15 J = 2,256
0034        IF (DA(J) .GT. RMAX) RMAX = DA(J)
0035     15 IF (DA(J) .LT. RMIN) RMIN = DA(J)
0036        IF (LU .EQ. 1 .OR. ICOUNT .GT. 1) GO TO 20
0037  C
0038  C  INITIALIZE THE GRAPHICS TASK
0039  C
0040        WRITE (1,500)
0041    500 FORMAT ("POSITION THE PAPER ON THE PLOTTER"
0042       *,/,     "WHEN THIS IS DONE,           ENTER  1"
0043       *,/,     "IF YOU WISH TO STOP,         ENTER  0")
0044        READ (1,*) ICON
0045        IF (ICON .EQ. 0) GO TO 999
0046     20 CALL PLOTR (IGCB,ID,1,LU)
0047  C
0048  C  DEFINE THE VIEWING SURFACES
0049  C
0050        IF (LU .EQ. 1) AR = 1.5
0051        IF (LU .EQ. 13) AR = 1.35
0052        VX1 = 20.
0053        VX2 = 100. * AR - 20.
0054        IF (AR .LT. 1) VX2 = 80.
0055        VY1 = 20.
0056        VY2 = 80.
0057        IF (AR .LT. 1) VY2 = 100. / AR - 20.
0058        CALL SETAR (IGCB,AR)
```

```
0059         CALL VIEWP (IGCB,VX1,VX2,VY1,VY2)
0060         CALL WINDW (IGCB,0.,256.,-1.,.25)
0061   C
0062   C  NORMALIZE THE DATA IF NECESSARY AND PLACE IN THE PLOT ARRAY
0063   C
0064         IF (RMAX .LE. 1.0 .AND. RMIN .GE. (-1.0)) GO TO 30
0065         WRITE (1,510) RMAX,RMIN
0066     510 FORMAT ("ONE OF THE FOLLOWING OUT OF RANGE:"
0067        *,/,      "RMAX = ",F8.4,"     RMIN = ",F8.4
0068        *,/,      "DIVIDING DATA BY LARGEST ABS VALUE OF THE TWO!")
0069         DIV = ABS (RMAX)
0070         IF (ABS (RMIN) .GT. DIV) DIV = ABS (RMIN)
0071      30 DO 40 J = 1,256
0072         AVG = AVG + DA(J)
0073         D(1,J) = FLOAT (J)
0074      40 D(2,J) = DA(J) / DIV
0075         AVG = AVG / 256.0
0076   C
0077   C  DRAW THE AXES
0078   C
0079         CALL PEN (IGCB,ICOUNT)
0080         IF (LU .EQ. 1) GO TO 45
0081         IF (ICOUNT .NE. 1) GO TO 50
0082         WRITE (1,520)
0083     520 FORMAT ("DO YOU NEED A NEW FRAME?  YES = 1"
0084        *,/,     "                          NO  = 0")
0085         READ (1,*) ICON
0086         IF (ICON .EQ. 0) GO TO 50
0087      45 CALL FXD  (IGCB,2)
0088         IF (LU .EQ. 1) CALL LGRID (IGCB,-32.,.25,0.,0.0,2.,1.)
0089         IF (LU .EQ. 13) CALL LGRID (IGCB,-32.,.25,0.0,-.25,2.0,2.,1.)
0090   C
0091   C  PLOT THE  DATA
0092   C
0093      50 CALL MOVE (IGCB,D(1,1),D(2,1))
0094         DO 60 J = 1,256
0095      60 CALL PLOT (IGCB,D(1,J),D(2,J),1)
0096         CALL PENUP (IGCB)
0097   C
0098   C  WRITE THE MAX, AVERAGE, AND MIN VALUES ON THE PLOT
0099   C
0100         PY = (-0.62) - 0.08 * ICOUNT
0101         CALL MOVE (IGCB,5.,PY)
0102         CALL LABEL (IGCB)
0103         WRITE (LU,530) RKU(ICHAN),RMAX,AVG,RMIN
0104     530 FORMAT ("KU =",F5.1,"  MAX =",F6.3,"  AVG =",F6.3,"  MIN =",F6.3)
0105   C
0106   C  TERMINATE THE GRAPHICS TASK AND RETURN DATA
0107   C
0108         CALL PEN (IGCB,0)
0109     100 WRITE (1,540)
0110     540 FORMAT ("EXAMINE THE DATA -- WHEN READY TO CONTINUE,   ENTER 1")
0111         READ (1,*) ICON
0112         CALL GCLR (IGCB)
0113         CALL PLOTR (IGCB,ID,0)
0114         CALL EXEC (ICODE,2,DA,IL)
0115         GO TO 400
0116      70 IP(2) = LU
0117         IP(3) = ICOUNT
0118         CALL PRTN (IP)
```

```
0119          GO TO 80
0120    C
0121    C  ERROR PROCESSING SECTION
0122    C
0123      400 CALL ABREG (IA,IB)
0124          WRITE (1,600) IA,IB
0125      600 FORMAT ("ERROR IF &RAWPL DURING DATA FILE RETRIEVAL/STORAGE:"
0126         *,/,      "A-REGISTER = ",I6," (ASCII CODE FOR THE ERROR TYPE)"
0127         *,/,      "B-REGISTER = ",I6," (ASCII CODE FOR THE ERROR NUMBER)"
0128         *,/,      "REFER TO CHAPTER 2 OF THE 'RTE-IVB PROGRAMMERS "
0129         *,        "REFERENCE MANUAL' FOR",/,"      MORE INFORMATION.")
0130          IF (JUMP .EQ. 1) GO TO 10
0131          GO TO 70
0132       80 CALL EXEC (6)
0133      999 STOP
0134          END
```

APPENDIX B

REDUCTION SOFTWARE

B.1.1 INTRODUCTION

The raw case-wall data acquired by the acquisition program WKAQN is stored in files on disk of the HP-21MX computer. That data is output and transferred to the IBM 3033 computer for reduction. The FORTRAN program WKCONCP is used to convert the recorded voltages to pressure coefficients, even the spacing of the array by interpolation, and store the newly generated array on the IBM disk for use in the plotting program. Program WKCONCP is described, with flowchart and listing, in Section B.2.

The FORTRAN program WKCONPLT is used to read the coefficient file and generate the graphics vectors to produce contour maps. The output of WKCONPLT can be directed to any of several devices. (The maps reproduced in the present document were generated on a Versatec plotter.) Program WKCONPLT is described, with flowchart and listing, in Section B.3.

B.1.2 Nomenclature for Reduction Programs

A,B,C,	real	Coefficients for Ps9 equation
A0	real	Intercept of P-e curve
A1	real	Slope of P-e curve
As9	real	Speed of sound at S9 (m/sec)
e	real	Kulite voltage (P-PKR)
GAMMA	real	Ratio of specific heats, 1.405
K0	real	Intercept of e-PKR curve
K1	real	Slope of e-PKR curve
Ms9	real	Mach number at S9
P	real	Unsteady absolute static pressure in compressor
PATM	real	Atmospheric pressure
PE	real	Unsteady pressures after being Smoothed and evened
PKR	real	Kulite reference pressure
PNR	real	Pneumatic reference pressure
Ps	real	Pneumatic pressure
Ps9	real	Freestream reference static pressure
Qs9	real	Freestream reference dynamic pressure
R	real	Gas constant, for air $287\frac{N-M}{Kg^{o}K}$
R0	real	Radius of flow meter throat (meters)
RPM	integer	Shaft anular velocity (RPM)
t	real	Temperature signal from thermocouple
TT	real	Total temperature (^{o}K)
U	real	Rotor speed (m/sec)
WS	real	Referred flow rate

B.2 DATA REDUCTION PROGRAM--WKCONCP

B.2.1 Description of Program WKCONCP

The pressure data were reduced using the FORTRAN program WKCONCP which accesses the data stored from the acquisition, converts the Kulite voltages to pressure coefficients, evens the spacing of the array, and smooths the data. A flowchart for the program WKCONCP is shown in figure B-1.

After the raw data is read from the disk, the voltage is converted to pressure in inches of water using the relationship:

$$P = A0 + A1\ (e * 10000./GAIN) + PKR \qquad (B2\text{-}1)$$

where "GAIN" is the voltage gain of the Datel amplifier between the transducer and the A/D.

The data are then spaced evenly by a linear interpolation scheme. Figure 7 of the main report shows how the Kulite transducers, labeled K6 to K13, are spaced at different distances apart. Since the contour plotting routine assumes equal spacing, it can not be applied to data in the form it is acquired. The data array is therefore expanded to 16 x 256 by a linear interpolation between the Kulite locations, giving data at E1 to E16 from data at K6 to K13. (Figure 7)

The data in the present report were smoothed in the blade-to-blade (circumferential) direction to remove spikes. A cubic spline interpolation prediction method was used from the IMSL Library of FORTRAN subroutines. The

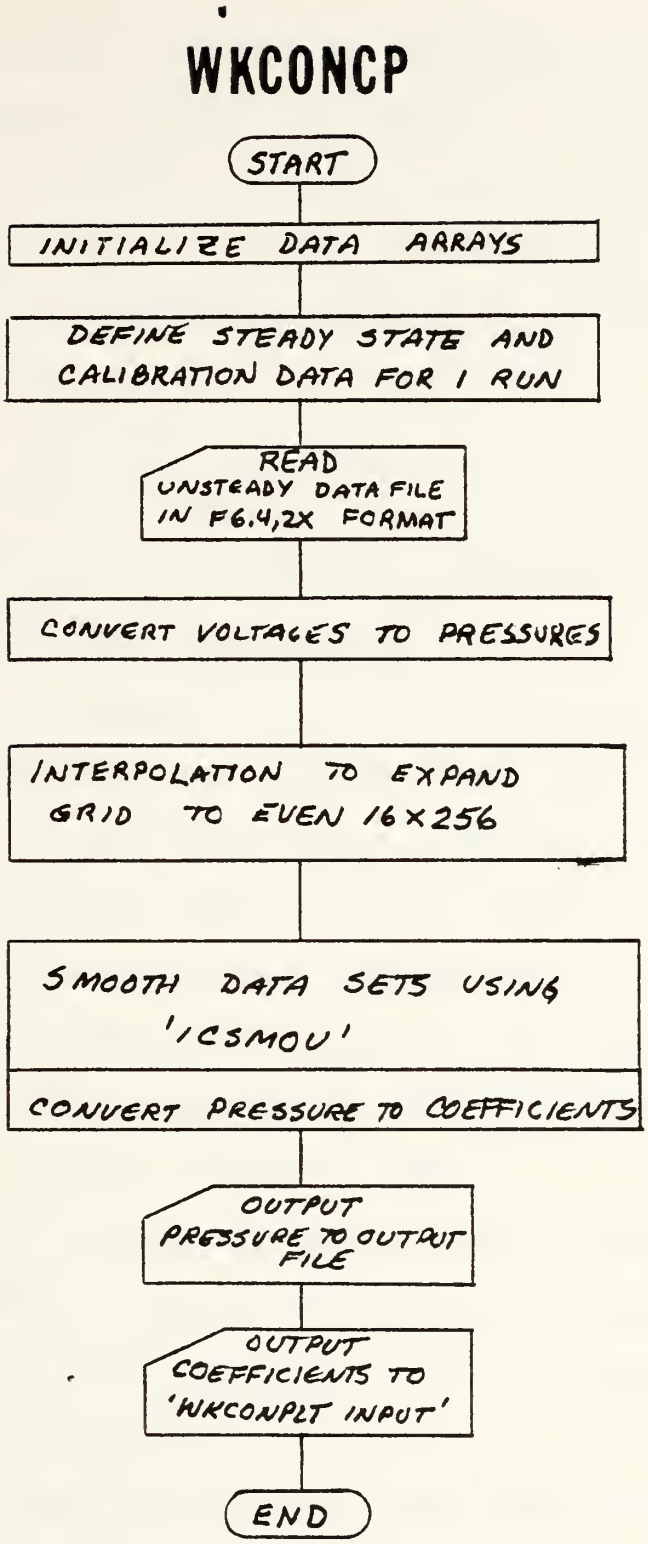

Figure B.1 Flowchart for WKCONCP

subroutine "ICSMOU" uses slopes calculated from previous points to predict the next data point. If the data point is out of the criterion specified, the point is thrown out and a predicted point is inserted in the data.

The program then calculates the pressure coefficient defined as:

$$Cp = PE - Ps9 / Qs9 \qquad \text{(B2-2)}$$

where static pressure, PE, is the unsteady pressure data read during paced acquisition that has been smoothed and expanded to an evenly spaced array.

The "freestream reference pressure, Ps9, is a steady pneumatic inferred from measurements at wall pressure taps upstream of the rotor and extrapolated to the rotor entrance by parabolic curve fitting. Static taps 1 through 6 are read during the on-line calibration. Static pressures recorded by the Scanivalve (pneumatic) are converted to pressures in units of inches of water using the relationship:

$$Ps = (PN - TARE) * 100000. + PNR \qquad \text{(B2-3)}$$

where PN is the pneumatic pressure read via the Scanivalve, PNR is a pneumatic reference pressure applied to the Scanivalve, and TARE is the Scanivalve transducer output with zero differential pressure.

Pneumatic pressures were used from three sets of data obtained a open throttle. The ratio of P/Pt was plotted against axial distance for each set of data. A parabolic

curve fitting was used to acquire a second order equation in terms of x, the axial distance giving

$$P/Pt = -.0011X^2 + .0016 \cdot X + .9525 \qquad \text{(B2-4)}$$

This was repeated for the other two sets of data. Then, the coefficients of each term were plotted versus referred flow rate. Each coefficient curve was approximated resulting in second order equations for the coefficients as a function of referred flow rate. The equations obtained were:

$$A = -.0011\ WS^2 + .0149 \cdot WS + .9174 \qquad \text{(B2-5a)}$$

$$B = .0006 \cdot WS - .0042 \qquad \text{(B2-5b)}$$

and

$$C = -.0003 \cdot WS + .0018 \qquad \text{(B2-5c)}$$

Knowing the location at the inlet to the rotor, (x=5.375), the ratio Ps9/Pt becomes:

$$Ps9/Pt = A = 5.375 \cdot B + 28.891 \cdot C \qquad \text{(B2-6)}$$

Substituting equations B2-5 into equation B2-6, the reference pressure is written as a function of referred flow rate alone, thus

$$Ps9 = 0.9468 + .00946 \cdot WS - .0011 \cdot WS^2 \qquad \text{(B2-7)}$$

Dynamic pressure is obtained from the following relationship:

$$Qs9 = 1/2 \cdot \gamma \cdot Ps9\ (Ms9^2 + U^2/As9^2) \qquad \text{(B2-8)}$$

The reference Mach number is calculated from the Perfect Gas relationship:

$$Ms9 = \left(\frac{2}{\gamma-1}\left((Pt/Ps9)^{\frac{\gamma-1}{\gamma}} - 1\right)\right)^{1/2} \qquad \text{(B2-9)}$$

The stagnation pressure, Pt, is read at the compressor inlet.

The rotor tip speed, U, is calculated from the shaft speed and the radius of the case-wall (5.5 inches).

$$U = RPM * 2\pi(5.5)/60/12 * .3048 \qquad \text{(B2-10)}$$

$$= RPM * (0.014629) \text{ m/sec}$$

The speed of sound, As9, is calculated from the Perfect Gas relationship:

$$As9 = (\gamma R \cdot Tt \cdot (1 + \frac{\gamma-1}{2} Ms9^2)^{-1})^{1/2} \qquad \text{(B2-11)}$$

Total temperature is obtained from the millivolt output, t, of a J-type thermocouple probe in the inlet and converting the value to degrees Kelvin using,

```
TT = (t*1000.*34.7279+.6149)*5/9+273.15          (B2-12)
```

With all of the terms defined, the pressure coefficient can be written:

```
Cp = (A0+A1*(e*10000./GAIN)+PKR-Ps9)/Qs9         (B2-13)
```

The array of coefficients calculated using Equation B2-3 is stored in a file to be used in the contour program.

B.2.2

FILE: WKCONCP FORTRAN A NAVAL POSTGRADUATE SCHOOL

```
C ***************************************************************** C
C *   PROGRAM WKCONCP IS USED TO PLOT CONTOUR MAPS OF DATA ACQUIRED  * C
C *   FROM THE TRANSONIC COMPRESSOR AT THE TURBOPROPULSION LAB AT    * C
C *   THE NAVAL POSTGRADUATE SCHOOL.  REQUIRED INPUT IS 12 X 256     * C
C *   ARRAY OF WALL PRESSURE DATA IN 8 X 384 STORAGE FORMAT. THUS    * C
C *   EACH ROW IS STORED 8 X 32. OUTPUT IS STORED IN 16 X 256        * C
C *   ARRAY AS A 8 X 512.  I/O FORMAT 8(F6.4,2X)                     * C
C *                  VER. 3.0          1 SEPTEMBER 1983        DWC  * C
C ***************************************************************** C
C
C ----------- '100' ---------------- DIMENSIONS AND INITIAL VALUES --
      REAL DA(12,256),P(12,256),PE(16,256),CP(16,256)
      REAL AC,A1,A01(12),A02(12),A11(12),A12(12)
      REAL X(256),Y(256),WK2(500),WK1(20),X1(16),Y1(16),DIS,SC
      REAL GAIN,GAMMA,R,PATM,TAR1,PT,TT,PS,PR,RPM,MFR,U,M2,C,A2,M
      INTEGER BP,N,IM,IN,MAXIT
      DO 110 I=1,12
         Y1(I) = 0.0
         Y1(I+4) = 0.0
         DO 105 J=1,256
            DA(I,J) = 0.0
            P(I,J) = 0.0
            Y(J) = 0.0
  105    CONTINUE
  110 CONTINUE
      DO 150 I=1,16
         DO 140 J=1,256
            PE(I,J) = 0.0
            CP(J,I) = 0.0
  140    CONTINUE
  150 CONTINUE
      DATA GAMMA/1.402/,GAIN/40./,R/287.06/
C                                          INPUT VALUES FOR EACH RUN IN THE
C                                          NEXT LINES
      DATA A11/1.011,1.012,0.983,1.005,1.010,0.993,1.005,0.997,0.993,
     1       1.009,0.711,1.001/
      DATA A12/1.005,1.001,0.977,1.000,1.012,0.987,1.003,1.000,1.015,
     1       1.005,1.007,1.019/
      DATA A01/49.312,52.452,55.470,55.745,52.892,54.837,52.205,34.782,
     1       19.630,05.258,  .571,-13.61/
      DATA A02/49.099,52.378,55.885,55.799,52.914,54.613,52.428,34.873,
     1       18.939,5.231,-10.23,-14.60/
      PATM = 404.79
      TAR1 = ( .000006 +.000005 ) / 2.0* 100000.0
      PT   = (-.00014  -.00015) * 100000.0 / 2.0 - TAR1 + PATM
      TT   = ( .00100  + .00095 ) / 2.0 * 1000. * 34.7279 + 0.6149
      TT   = TT * 5./9. + 273.15
      PS   = -72.72+ PATM
C                                          FLOW INPUTS
      PR   = 1.235
      RPM  = 21420
      MFR  = 14.584
      BP   = 4
      N    = 20
C ----------- '200' ---------------- FLOW CALCULATIONS------------
      U    = 0.014629 * RPM
      M2   = 2.0/(GAMMA-1.0) * ( (PT/PS)**((GAMMA-1.0)/GAMMA ) - 1.0)
      A2   = GAMMA * R * TT / (1.0 + (GAMMA-1.)/2.0 * M2)
C     Q    = GAMMA/2.0 * PS * ( M2 + (U*U)/A2 )
      Q = 132.
      M    = SQRT(M2)
C ----------- '300' ---------------- READ DATA FILES -------------
      DO 320 I = 1,12
C        IF ( I .LT. 10 ) WRITE(4,910) I
C        IF ( I .GT. 9 ) WRITE(4,911) I
         DO 310 J = 1,249,8
            J1 = J - 1
            READ(3,920) (DA(I,J1+J2),J2=1,8)
C           WRITE(4,930) (DA(I,J1+J2),J2=1,8)
  310    CONTINUE
  320 CONTINUE
C ----------- '400' ---------------- CHANGING VOLTS TO PRESSURE ---
```

```
FILE: WKCONCF  FORTRAN  A   NAVAL POSTGRADUATE SCHOOL

      DO 42C I = 1,12
C        IF ( I .LT. 10 )  WRITE(4,940) I
C        IF ( I .GT. 9 )  WRITE(4,941) I
         AO = ( AO1(I) + AO2(I) ) / 2.0
         A1 = ( A11(I) + A12(I) ) / 2.0
         DO 410 J = 1,256
            P(I,J)  = (DA(I,J) * 10000. / GAIN)* A1 + AO + PATM
 410     CONTINUE
C        DO 415 J = 1,249,8
C           J2 = J-1
C           WRITE(4,970) (P(I,J1+J2),J1=1,8)
C415     CONTINUE
 42C  CONTINUE
C ------------ '500' ----------------- EVENING DISTRIBUTION OF COLUMNS
C                                      EQUIVALENCE OF INTERIOR ROWS
      DO 52C J = 1,256
         DO 510 I = 3,10
            PE(I+2,J) = P(I,J)
 510     CONTINUE
         PE(14,J) = P(11,J)
C                                      CREATE 13E FROM 10 + 11
         PE(13,J) = ( P(10,J) + P(11,J) ) / 2.
C                                      CREATE 15E + 16E FROM 11 + 12
         PE(15,J) = (.19/.5)*( P(12,J) - P(11,J) ) + P(11,J)
         PE(16,J) = (.38/.5)*( P(12,J) - P(11,J) ) + P(11,J)
C                                      CREATE 4E FROM 2 + 3
         PE(4,J) = (.12/.31)*( P(3,J) - P(2,J) ) + P(2,J)
C                                      CREATE 1E,2E + 3E FROM 1 + 2
         PE(1,J) = (.05/.5)*( P(2,J) - P(1,J) ) + P(1,J)
         PE(2,J) = (.24/.5)*( P(2,J) - P(1,J) ) + P(1,J)
         PE(3,J) = (.43/.5)*( P(2,J) - P(1,J) ) + P(1,J)
 52C  CONTINUE
      DO 54C I = 1,16
         IF ( I .LT. 10 ) WRITE(4,950) I
         IF ( I .GT. 9 ) WRITE(4,951) I
         DO 515 J = 1,249,8
            J2 = J-1
            WRITE(4,970) (PE(I,J1+J2),J1=1,8)
 515     CONTINUE
 540  CONTINUE
C ------------------------------------ SMOOTHING DATA ---------------
C ------------ '600' ----------------- CALCULATING CP'S AND ECHOPRINT
      DO 65C I = 1,16
         DO 630 J =1,256
            X(J) = J
            Y(J) = PE(I,J)
 63C     CONTINUE
         DIS =1.0
         SC = .02*3.84*(.43/255)
         MAXIT = 40
         CALL ICSMOU(X,Y,256,DIS,SC,MAXIT,WK2,IER)
         DO 640 J =1,256
            CP(I,J) = ( Y(J) - PS ) / Q
 640     CONTINUE
 65C  CONTINUE
      DO 68C I = 1,16
         IF ( I .LT. 10 ) WRITE(4,960) I
         IF ( I .GT. 9 ) WRITE(4,961) I
         DO 660 J = 1,249,8
            J2 = J-1
            WRITE(4,970) (CP(I,J1+J2),J1=1,8)
 66C     CONTINUE
 680  CONTINUE
C ------------ '700' ----------------- WRITE INTO DATA FILES ---------
      DO 74C I = 1,16
         DO 720 J = 1,249,8
            J2 = J-1
            WRITE(5,920) (CP(I,J1+J2),J1=1,8)
 720     CONTINUE
 740  CONTINUE
      STOP
```

```
FILE: WKCONCP  FORTRAN  A   NAVAL POSTGRADUATE SCHOOL

C ------------ '900' ----------------- FORMATS ----------------------
C910  FORMAT(1H1,//,5X,'AVERAGE UNSTEADY WALL PRESSURE DATA -- FILE - '
C     1   ,'h545C',I1,//)
C911  FORMAT(1H1,//,5X,'AVERAGE UNSTEADY WALL PRESSURE DATA -- FILE - '
C     1   ,'h545',I2,//)
 920  FORMAT(8(F6.4,2X))
 930  FORMAT(5X,8(F6.4,2X),/)
C940  FORMAT('1',//,5X,'ARRAY OF PRESSURES                    -- FILE - '
C     1   ,'h545C',I1,//)
C941  FORMAT('1',//,5X,'ARRAY OF PRESSURES                    -- FILE - '
C     1   ,'h545',I2,//)
 950  FORMAT('1',//,5X,'ARRAY OF PRESSURES EVENED             -- FILE - '
     1   ,'h545C',I1,//)
 951  FORMAT('1',//,5X,'ARRAY OF PRESSURES EVENED             -- FILE - '
     1   ,'h545',I2,//)
 960  FORMAT('1',//,5X,'ARRAY OF PRESSURE COEFFICIENTS        -- FILE - '
     1   ,'h545C',I1,//)
 961  FORMAT('1',//,5X,'ARRAY OF PRESSURE COEFFICIENTS        -- FILE - '
     1   ,'h545',I2,//)
 970  FORMAT(5X,8(F8.2),/)
      END
```

B.3 CONTOUR PROGRAM--WKCONPLT

B.3.1 Description of WKCONPLT

The contour mapping is accomplished using the FORTRAN program WKCONPLT which uses the data stored from the reduction program WKCONCP and generates plot vectors to be output on a selection of devices. A flowchart is shown in Figure B-2.

The program reads the coefficient data from the disk and then calls a series of subroutines from the DISSPLA graphics library. [Ref. 18] The subroutines create a metafile of vectors that are stored on the disk. An executive routine called 'DISSPOP' is used to retrieve the vectors on a device of the users choice.

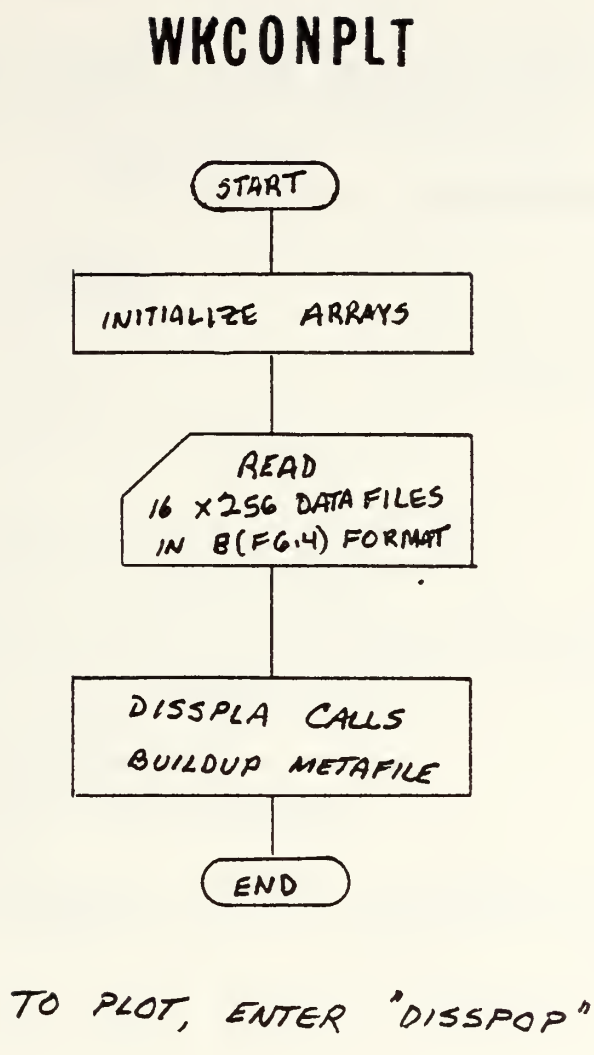

Figure B.2 Flowchart for WKCONPLT

FILE: WKCONPCP FORTRAN A NAVAL POSTGRADUATE SCHOOL

```
C ************************************************************************ C
C *      PROGRAM WKCONPLT -- READS DATA FROM "WKCONPOP INPUT A" AND      * C
C *      PLOTS THE CONTOUR USING DISSPLA SUBROUTINES.                    * C
C *      (TO REDUCE RAW DATA, SEE PROGRAM CONTCP)                        * C
C *      DATAFILE MUST BE STORED IN 8(F6.4,2X) FORMAT X 512 LINES        * C
C *      ( THIS IS EQUIVALENT TO 16 X 256 WHERE EACH TRANSDUCER          * C
C *      OUTPUT IS STORED 8 X 32.)                                       * C
C *                    VER 1.2              1 SEPTEMBER 1983      DWC   * C
C ************************************************************************ C
C
C ------------ '100' ----------------- DIMENSIONS AND INTIALIZING ---
      DIMENSION W(16,256)
      COMMON WORK(60000)
      DATA IM,IN/16,256/
C ------------ '200' ----------------- INITIALIZE PLOT ROUTINE ------
      CALL COMPRS
      CALL PAGE(8.5,11.0)
C ------------ '300' ----------------- READ AND ECHOPRINT DATA FILES --
      DO 320 I=1,16
         DO 310 J1=1,249,8
            J2=J1-1
            READ(3,910) (W(I,J+J2),J=1,8)
 310     CONTINUE
 320  CONTINUE
      CALL AREA2D(4.8,6.5)
      CALL SWISSM
      CALL SETCHR(30.,1,.01,1)
      CALL XNAME('S7              COMPRESSOR AXIS              S12 $',100)
      CALL YNAME('CIRCUMFERENTIAL$',100)
      CALL SWISSB
      CALL HEADIN('70% RPM; OPEN THROTTLE$',100,1.5,3)
      CALL SWISSM
      CALL HEADIN('COEFFICIENTS-NOT SMOOTHED$',100,1.0,3)
      CALL HEADIN('DELTA = 0.08$',100,1.0,3)
      CALL GRAF(1.,3.16,0.,32,256)
      CALL FRAME
      CALL ECOMCN(60000)
      CALL CONMAK(W,IM,IN,.08)
C     CALL CONANG(90.)
      CALL CONLIN(0,'SOLID','LABEL',2,5)
      CALL CONTUR(1,'LABELS','DRAW')
      CALL ENDPL(0)
      CALL DONEPL
      STOP
C ------------ '900' ----------------- FORMATS----------------------
 910  FORMAT(8(F6.4,2X))
C ------------ '1000' ---------------- END OF FILE ------------------
      END
```

APPENDIX C

TRANSONIC CASCADE

C.1 CASCADE BACKGROUND

The cascade wind tunnel which is a seven-tenths scale model of the relative flow at the Transonic Compressor rotor tip was designed by Demo in 1978. [Ref. 2] Due to the limitations of the blowdown air supply available for the cascade, the area of the test section was limited, but contains 5 blade passages. The flow conditions were designed to be Mach - 1.4 instead of the TCR design condition of Mach - 1.5. This compromise allowed a run time of about two to three minutes.

Preliminary blowdown tests were conducted in September 1978 with the blades removed. [Ref. 26] Operation at a stagnation pressure of 50 psia was verified.

Prior to further testing of this facility, a porous wall was designed by Volland to reduce the shock-boundary reflection. (See Ref. 3, Figure 10) Three test programs were conducted by Volland in 1980; (1) Calibration tests, (2) Cascade tests (wall plenum capped and uncapped), and (3) the Wave Cancellation tests. Repeatable data were obtained with the blades installed, however the pressure dropped throughout the test section because the exhaust was open to the atmosphere. The design called for a butterfly valve to create a

controlled back-pressure, but a suitable valve was not available at that time, nor was the test section equipped with the windows necessary for Schlieren observations. These two omissions were addressed in the present work.

C.2 CURRENT MODIFICATIONS

Volland reported uncertain shock patterns inferred from wall pressure measurements in his tests which reemphasized the need for optical viewing of the cascade section. The plexiglass plates designed by Demo were not built. Since optical quality glass would allow better Schlieren photography than would plexiglass, a window was designed for an available piece of optically flat and polished glass. However, due to the complexity and expense of manufacturing the glass window, a plexiglass window was built first. The resulting hardware is shown in Figure C-1. The drawings with specifications are found in Section C.4.

A special throttle valve was designed in 1982. The valve was required to be quick to actuate, sensitively controllable, and allow a negligible pressure drop when fully open. The resulting design is seen in the drawings in Section C.5. The ramp assembly is designed to be actuated by a hydraulic cylinder powered by a hand hydraulic pump. The ramp would be out of the flow path until after start-up, suddenly inserted to a stop, and remain in place for the duration of the test run. The eccentric cylinder on the top

of the throttle allows the operator to fine tune to the flow conditions desired.

C.3 RECOMMENDATIONS FOR THE CASCADE PROJECT

The modifications recommended by Volland are almost completed. The optical window is installed for the Schlieren observations. The throttle valve design is completed and most of the parts are manufactured. Some machining is still required to complete the ducting between the test section and the throttle. In order to test the cascade, the following steps are necessary.

1. Complete the machining of part numbers 5138, 5140, and 5141.
2. Assemble the throttle valve noting that an additional stand will be required to support the weight of the throttle and the duct. The stand will also provide an anchor for the ramp actuating cylinder.
3. A hand-operated hydraulic pump system is available, but needs to be tested for integrity and pressure output. A mounting bracket for the actuating cylinder needs to be designed, built, and installed.
4. It is suggested that a manometer board be used to measure the flow conditions during initial testing to establish the desired flow conditions.
5. A Schlieren system should be set up and tested in the static tunnel.

6. With the plastic duct in place to exit the flow outside of the laboratory, initial runs can be made to establish the desired Mach number and pressure ratio in the tunnel.
7. The acquisition system used for reading the pressures in Reference 3 was the HP 3052/9845 protable system now used extensively in the subsonic cascade building. The software programs used there can be modified easily to accommodate the pressure tap arrangement in the transonic cascade.
8. With the HP 3052/9845 in place, the original aluminum side walls can be installed and connected to Scanivalves to obtain pressure data.

It is further recommended that the pressure tap arrangement in the original side walls be modified to cover the test region more completely. The pressure contours obtained will than be more accurate and allow comparison with analytically predicted contours such as can be generated by Eidelman. [Ref. 4]

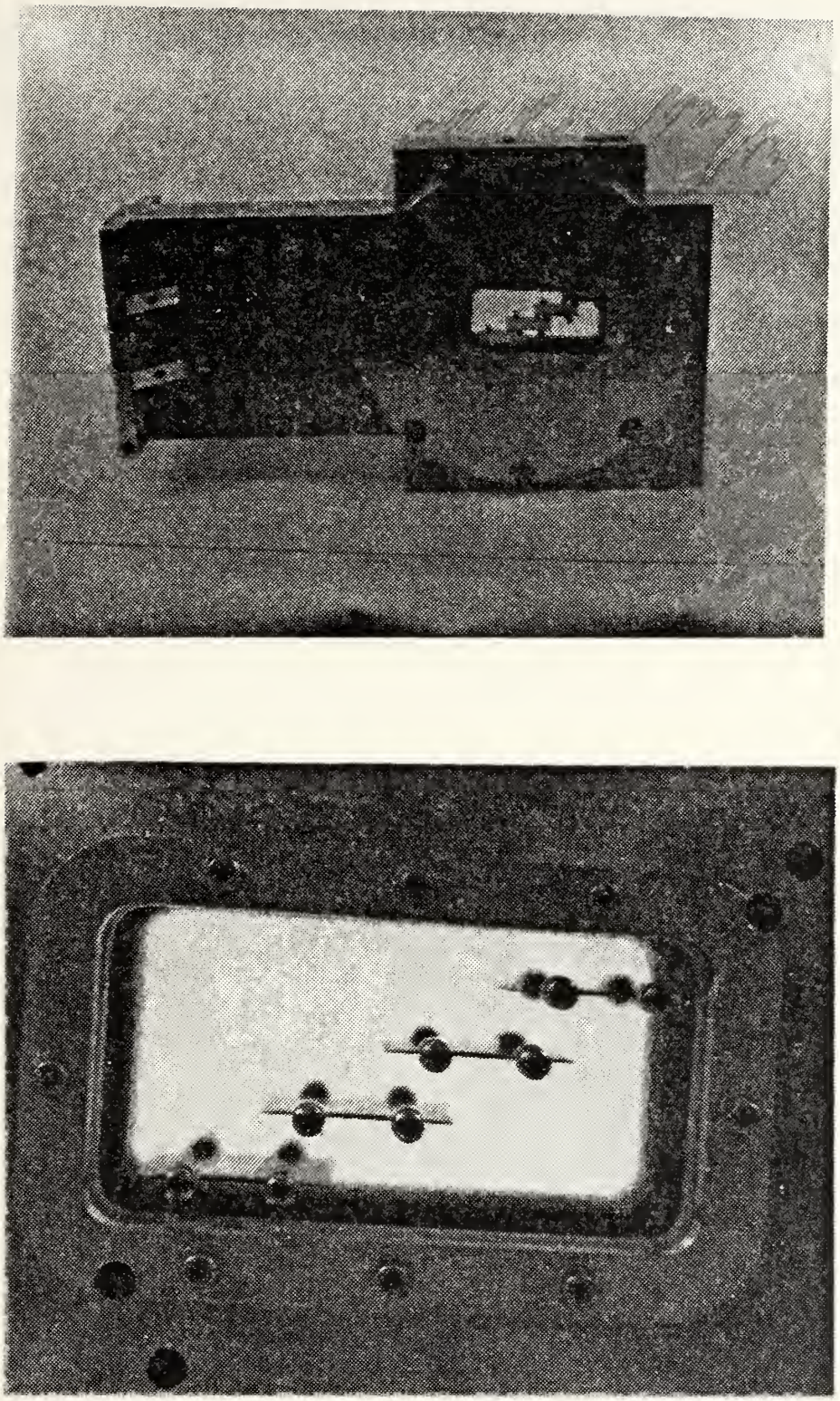

Figure C.1 Modified Test Section

C.4 DRAWINGS OF WINDOW MODIFICATIONS

The following pages contain:

DWG No.	Title
5111-2	Optical Glass Windows
5112-2	Window Supports
5113-2	Window Retainer Rings
5120	Window Gaskets

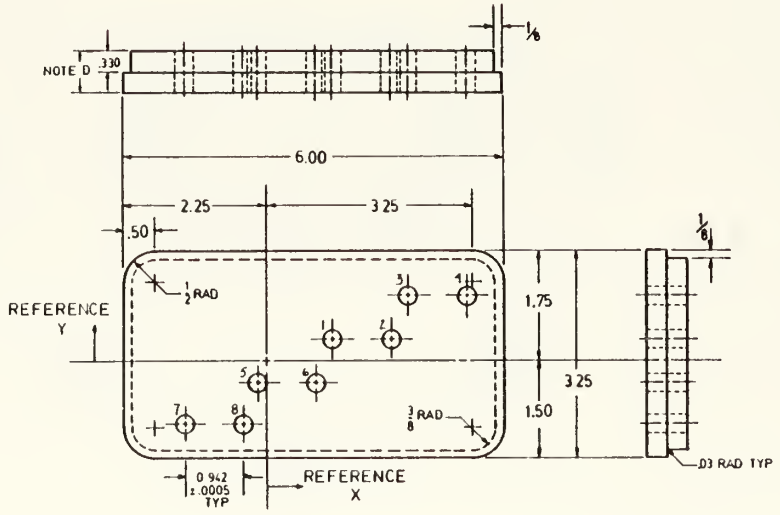

HOLE	X(in)	Y (in)
1	1.051	0.358
2	1.992	0.358
3	2.213	1.033
4	3.154	1.033
5	-0.110	-0.317
6	0.831	-0.317
7	-1.272	-0.993
8	-0.331	-0.993

NOTE A ALL HOLE DIAMETERS 0.311 IN. MANUFACTURE LEFT AND RIGHT HAND PARTS. RIGHT HAND SHOWN.

NOTE B PART NO. 5111-2A IS SHOWN. OPPOSITE HAND PART NO. 5111-2B.

NOTE C BREAK ALL EDGES.

NOTE D OPTICALLY POLISHED GLASS FLAT. 13X6X.067, TO BE PROVIDED. UNUSED MATERIALS TO BE RETURNED. OPTICAL SURFACES TO BE PROTECTED AND RETURNED WITHOUT FLAW.

NAVAL POSTGRADUATE SCHOOL
DEPARTMENT OF AERONAUTICS, TURBOPROPULSION LABORATORY
MONTEREY, CALIF 93940

OPTICAL GLASS WINDOWS

DRAWN BY [signature]	TOLERANCES
22 OCTOBER 1982	FRACTIONS ± 1/64
1" = 1"	DECIMALS
DIMENSIONS ARE IN INCHES	.0X ± .05
DRAWING NO. 5111-2	.0XX ± .005
	.0XXX ± .001
	ANGLES ± 1 min

SHEET OF

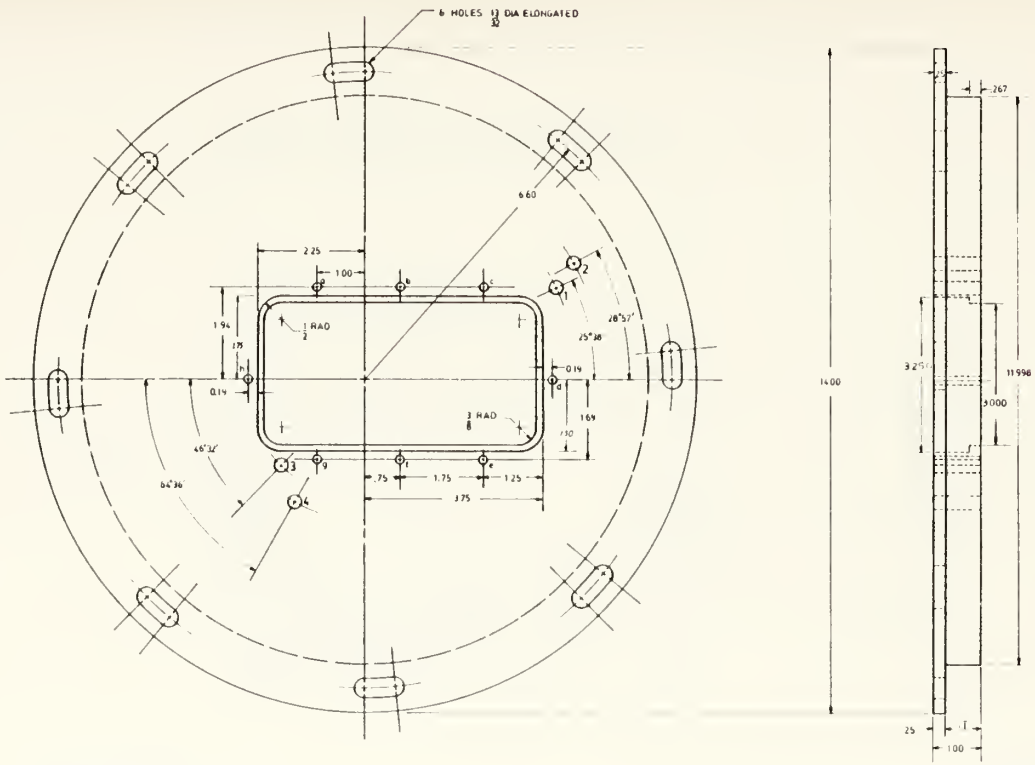

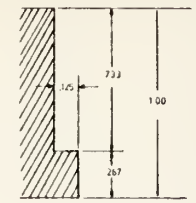

STEP DETAIL

SIDE 1 - 7.34
SIDE 2 - 7.22

NOTE HOLES a-h.
DRILL AND TAP FOR 10-32 SCREW
MINIMUM DEPTH 0.75

HOLES 1-4. DRILL THROUGH AT RADIUS
SPECIFIED 0.260 DIA $^{+.001}_{-.000}$

		FOR 1/4 20: X	Y
1	4.478	4.041	1.722
2	5.036	4.407	2.938
3	2.578	-1.779	-1.871
4	2.968	-1.275	2.687

PART NO 5112-2C IS SHOWN
5112-2D IS OF OPPOSITE HAND

NAVAL POSTGRADUATE SCHOOL
DEPARTMENT OF AERONAUTICS TURBOPROPULSION LABORATORY
MONTEREY, CALIF. 93940

WINDOW SUPPORTS

DRAWN BY [illegible]
DATE 4 NOVEMBER 1982
SCALE 1 : 1
DRAWING NO 5112-2

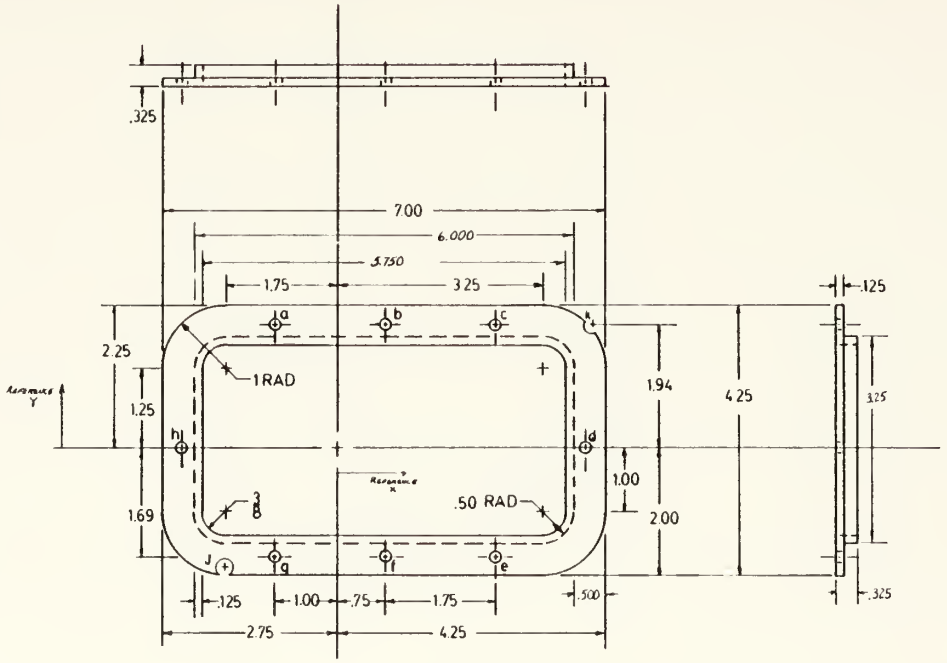

NOTE: HOLES a-h DRILLED FOR 10-32 SCREW

NOTE: MANUFACTURE LEFT AND RIGHT HAND PARTS
RIGHT HAND IS SHOWN

NOTE: HOLES J-K DRILLED .25.

HOLE	X	Y
J	-1.774	-1.871
K	4.044	1.922

NAVAL POSTGRADUATE SCHOOL
DEPARTMENT OF AERONAUTICS TURBOPROPULSION LABORATORY
MONTEREY CALIF 93940

WINDOW RETAINER RINGS

DRAWN BY D.W. Connell	TOLERANCES	
DATE 25 OCTOBER 1982	FRACTIONS = ± 1/64	
SCALE 1" = 1"	DECIMALS	
DIMENSIONS ARE IN INCHES	0.X = ± .05	SHEET
DRAWING NO 5113-2	0.XX = ± .005	OF
	0.XXX = ± .001	
	ANGLES = °	

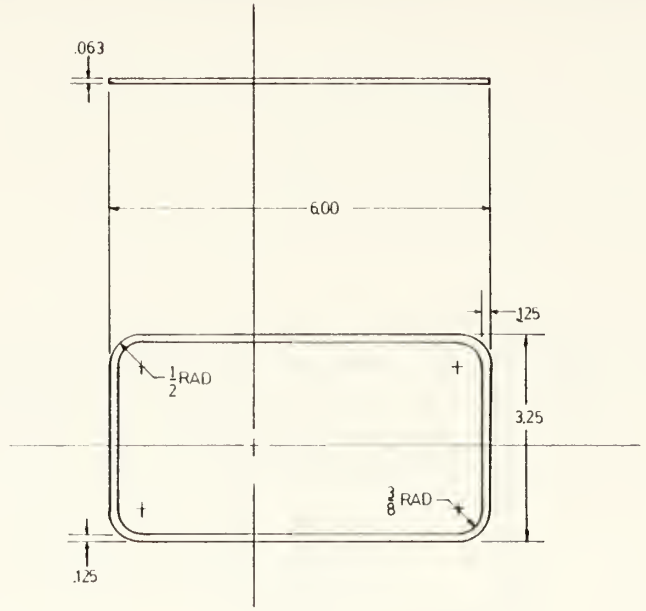

NOTE MANUFACTURE TWO PARTS, 5120A-B FROM GASKET MATERIAL.
MANUFACTURE TWO PARTS, 5120C-D FROM 1/16" SHEET TEFLON.

NAVAL POSTGRADUATE SCHOOL DEPARTMENT OF AERONAUTICS TURBOPROPULSION LABORATORY MONTEREY CALIF 93940		
WINDOW GASKETS		
DRAWN: D. Arnold	TOLERANCES	
DATE: 25 OCTOBER 1982	FRACTIONS ± 1/64	
SCALE: 1" = 1"	DECIMALS	SHEET
DIMENSIONS ARE IN INCHES	.XX ± .05 .XXX ± .005 .XXXX ± .001	OF
DRAWING NO. 5120	ANGLES	

C.5 DRAWINGS OF THROTTLE VALVE

The following pages contain drawings of the throttle valve by A. G. McGuire and the author, namely:

DWG No.	Title
5118B	Throttle Valve Assembly
5121A	Throttling Plate
5122	Adjustable Cylinder
5123	Sliding Plate Rails
5124	Sliding Plate
5125	Throttling Plate Pan
5130	Spacer
5132	Shaft
5133	Adjusting Cylinder Assembly
5134	End Plate
5135	Outer Cylinder Housing
5136	Cylinder Mounts
5137	Attaching Cylinder Parts
5138	Throttle Duct
5139	Transition Section
5140	Transition End Plates
5141	Transition Sidewalls

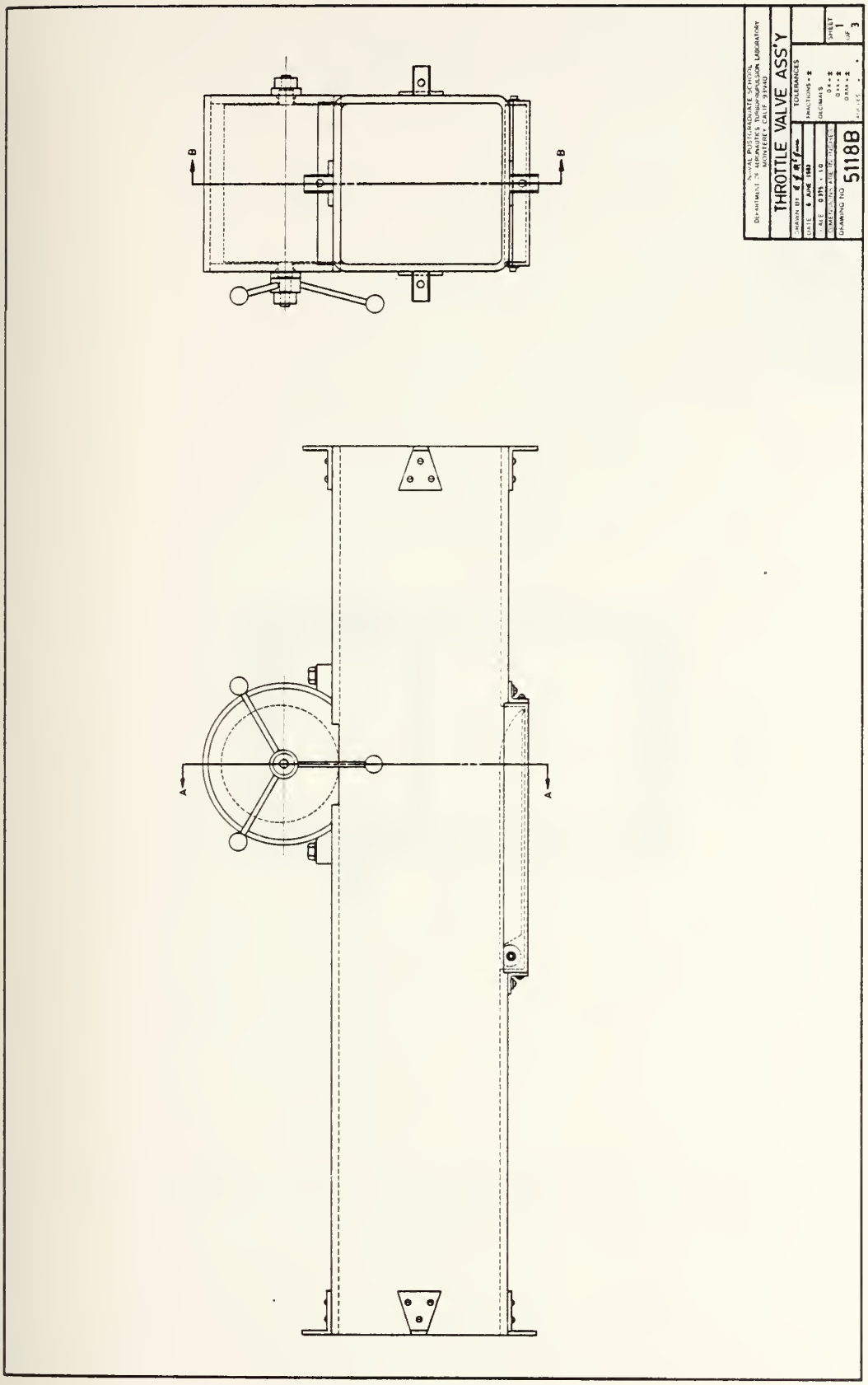
B
B
A
A
THROTTLE VALVE ASS'Y
5118B

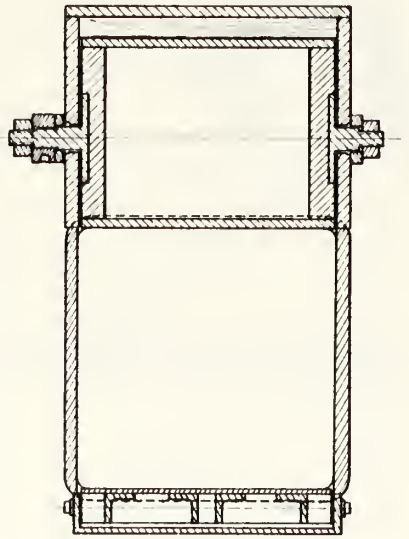

SECTION A-A

NAVAL POSTGRADUATE SCHOOL DEPARTMENT OF AERONAUTICS TURBOPROPULSION LABORATORY MONTEREY, CALIF 93940	
THROTTLE VALVE ASS'Y	
DRAWN BY L. J. McGuire	TOLERANCES
DATE 7 JUNE 1983	FRACTIONS = ±
SCALE 0.375 = 1.0	DECIMALS
DIMENSIONS ARE IN INCHES	0.X = ±
DRAWING NO 5118B	0.XX = ±
	0.XXX = ±
	ANGLES - .
	SHEET 2 OF 3

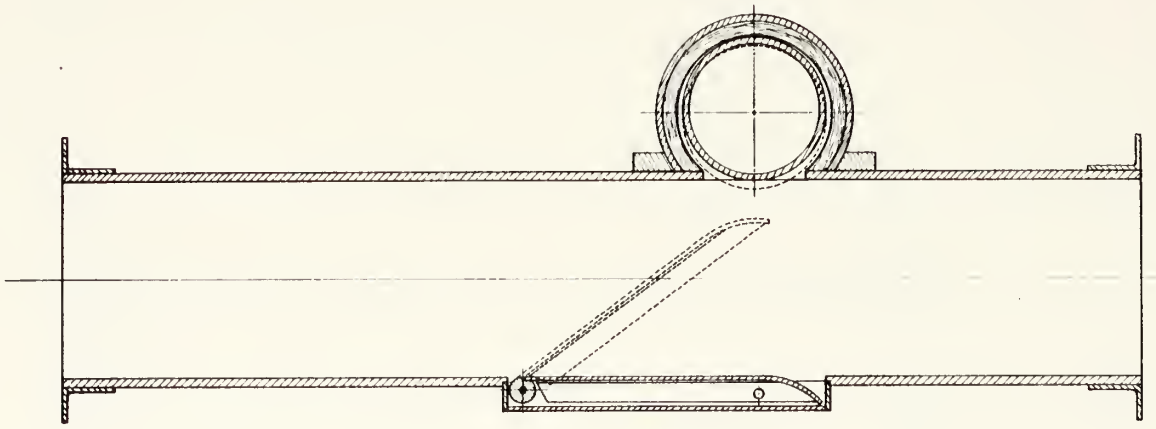

SECTION B-B

NAVAL POSTGRADUATE SCHOOL
DEPARTMENT OF AERONAUTICS TURBOPROPULSION LABORATORY
MONTEREY CALIF 93940

THROTTLE VALVE ASS'Y

DRAWN BY [illegible]
DATE 8 JUNE 1983
SCALE 0.375 = 1.0
DIMENSIONS ARE IN INCHES
DRAWING NO. 5118B

TOLERANCES
FRACTIONS = ±
DECIMALS
.0X = ±
.0XX = ±
.0XXX = ±
ANGLES = °

SHEET 3 OF 3

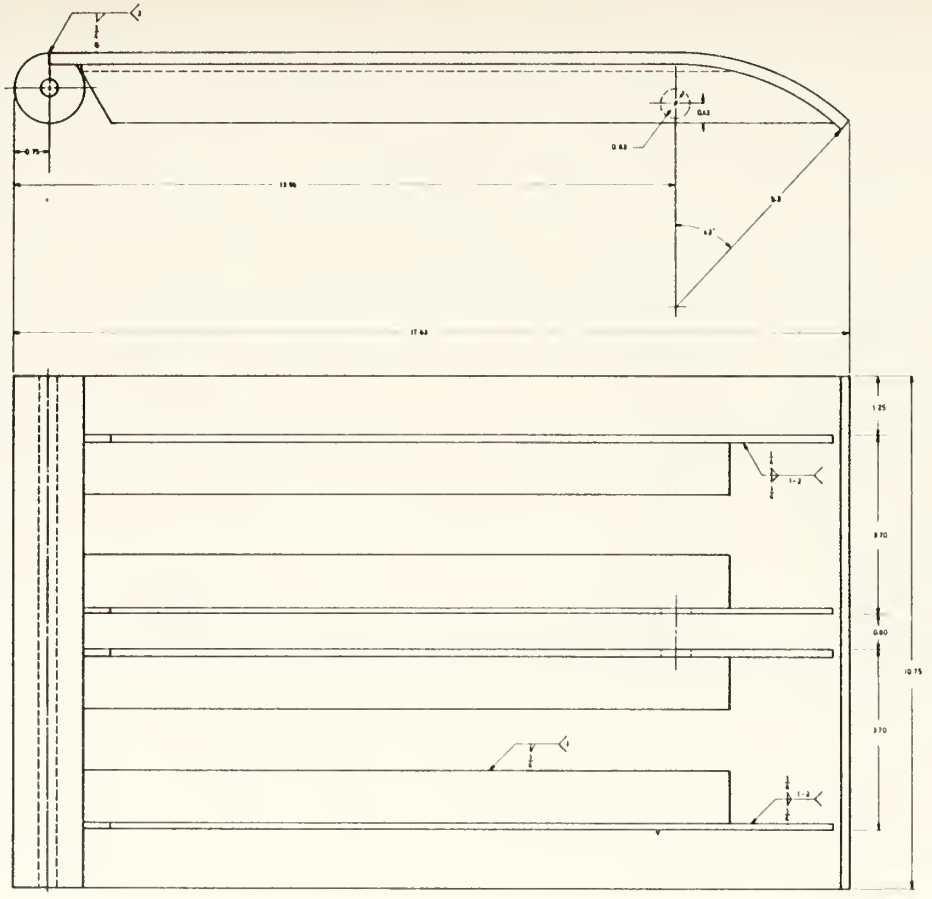

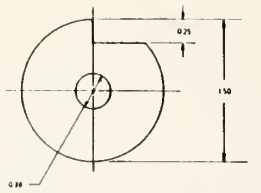

NOTE FINISHED LENGTH = 10.75

2X SCALE

① STIFFENERS ARE STANDARD 1.25 × 1.25 × 0.12 ANGLE STOCK CUT TO FIT CURVATURE AND LENGTH OF THE RAMP

② SECURE PLATE IN PLACE WITH A MINIMUM OF TEN, EQUALLY SPACED, 10-32 × 3/8 SCREWS BEFORE WELDING (COUNTERSUNK)

① WELD TYPICAL OF ALL STIFFENERS

NAVAL POSTGRADUATE SCHOOL
DEPARTMENT OF AERONAUTICS, TURBOPROPULSION LABORATORY
MONTEREY, CALIF. 93940

THROTTLING PLATE

DRAWN BY	C. J. McGuire
DATE	10 JAN 1983
SCALE	FULL
DIMENSIONS ARE IN INCHES	
DRAWING NO.	5121A
MATERIAL	MILD STEEL

TOLERANCES
FRACTIONS = ±
DECIMALS
0.X = ± 0.05
0.XX = ± 0.005
0.XXX = ± 0.001
ANGLES = ±1°

SHEET
OF

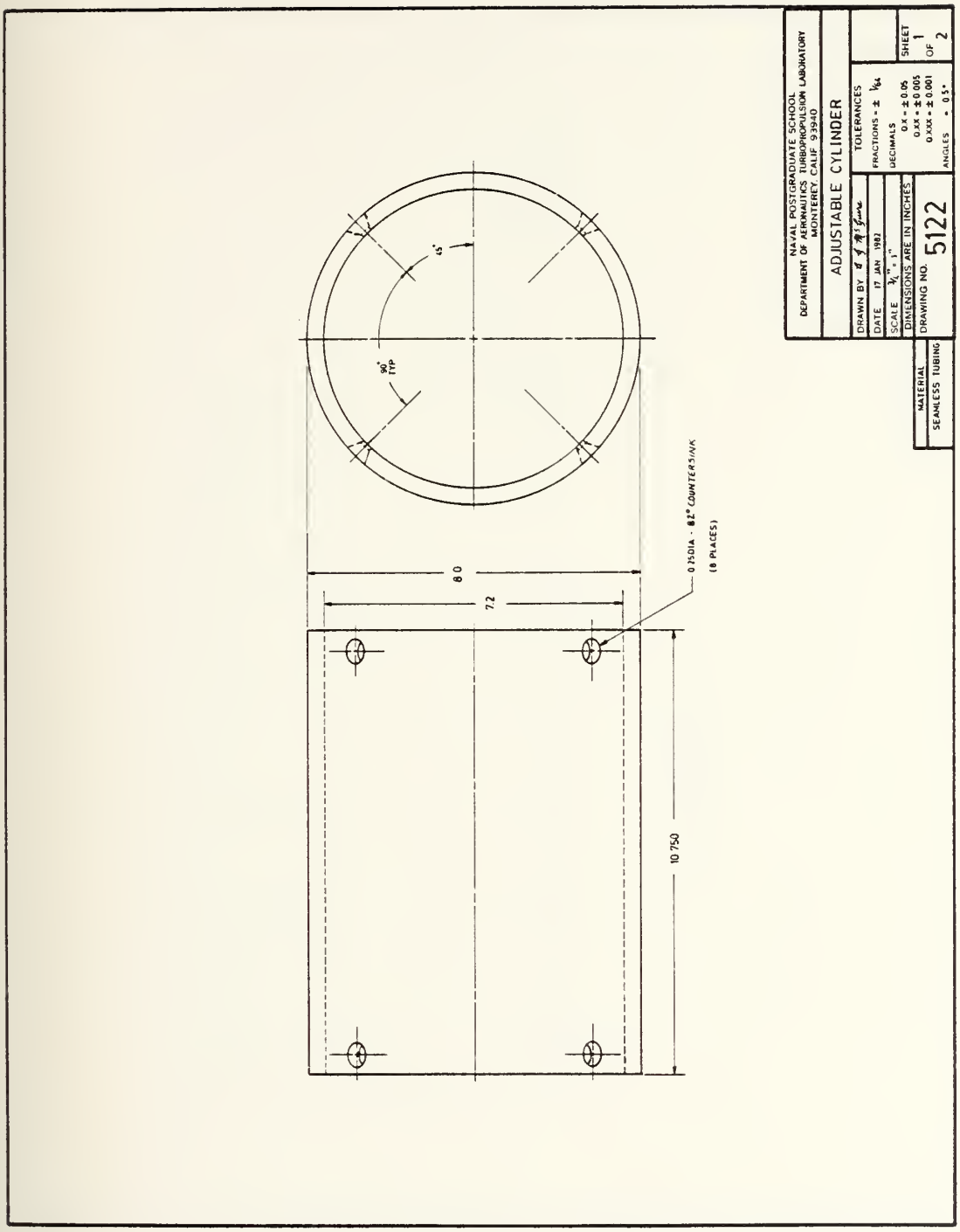
NAVAL POSTGRADUATE SCHOOL
DEPARTMENT OF AERONAUTICS TURBOPROPULSION LABORATORY
MONTEREY, CALIF 93940
ADJUSTABLE CYLINDER
DRAWN BY
DATE 17 JAN 1982
SCALE 3/4" = 1"
DIMENSIONS ARE IN INCHES
DRAWING NO. 5122
TOLERANCES
FRACTIONS = ± 1/64
DECIMALS
0.X = ± 0.05
0.XX = ± 0.005
0.XXX = ± 0.001
ANGLES = 0.5°
SHEET 1 OF 2
MATERIAL
SEAMLESS TUBING
45°
90° TYP
8.0
7.2
10.750
0.25DIA - 82° COUNTERSINK
(8 PLACES)

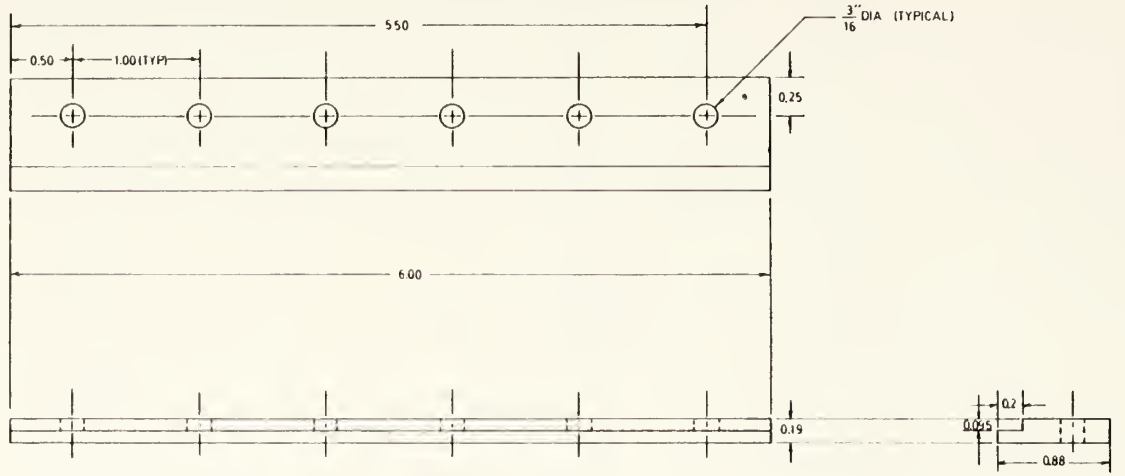

NOTE MANUFACTURE TWO PARTS
FROM ALUMINUM

SLIDING PLATE RAILS			
		4	
30 DECEMBER 1982			
2X		.03 .005 .001	
MATERIAL	5123		

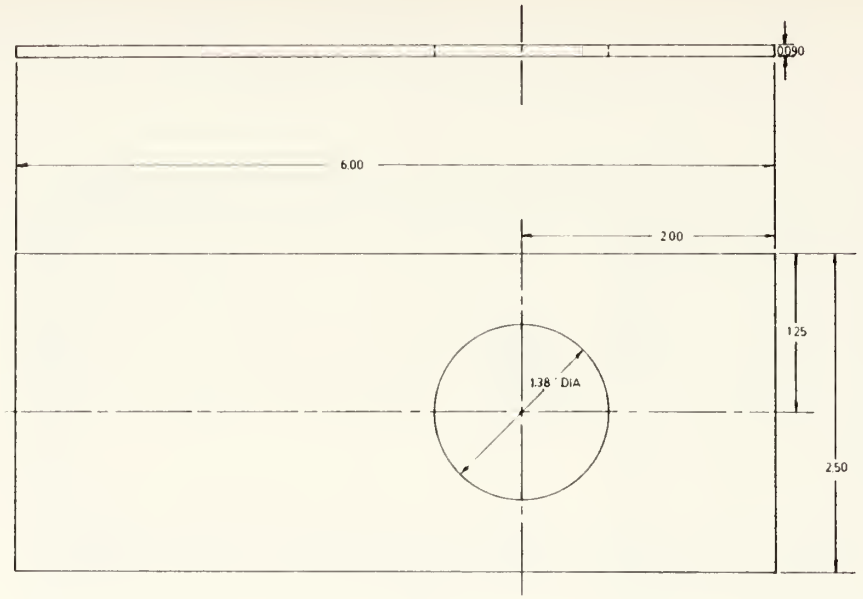

SLIDING PLATE

30 DECEMBER 1982

2 X

MATERIAL
2024 - T3 or T4
ALUMINUM

5124

± 1/64"
± 0.05
± 0.005
± 0.001

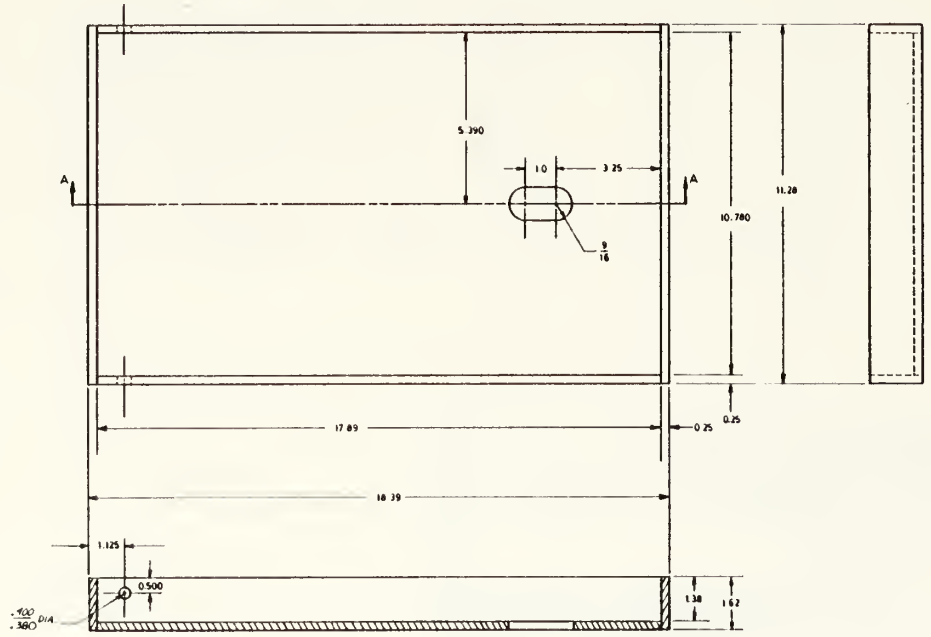

NOTE: WELD ALL SEAMS WITH DOUBLE BEVEL

NAVAL POSTGRADUATE SCHOOL
DEPARTMENT OF AERONAUTICS, TURBOPROPULSION LABORATORY
MONTEREY, CALIF 93940

THROTTLING PLATE PAN

DRAWN BY	R. J. McGuire
DATE	14 JAN 1982
SCALE	HALF
DIMENSIONS ARE IN INCHES	
MATERIAL	MILD STEEL
DRAWING NO.	5125

TOLERANCES
FRACTIONS = ± 1/32
DECIMALS
0.X = ± 0.05
0.XX = ± 0.005
0.XXX = ± 0.001
ANGLES = °

SHEET
OF

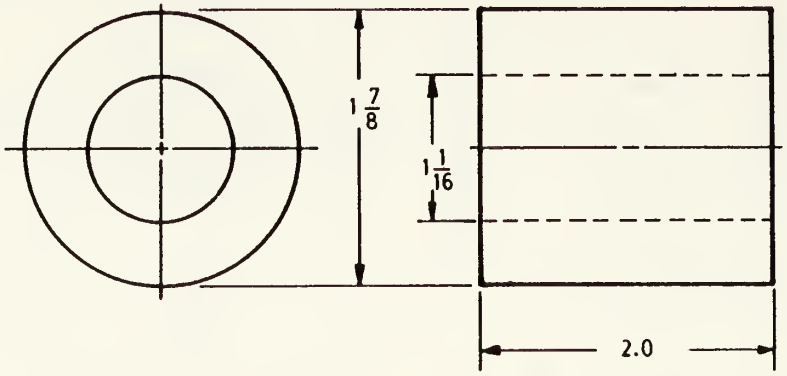

NAVAL POSTGRADUATE SCHOOL
DEPARTMENT OF AERONAUTICS, TURBOPROPULSION LABORATORY
MONTEREY, CALIF. 93940

SPACER

DRAWN BY L. G. McGuire	TOLERANCES	
DATE 1 FEB 1983	FRACTIONS = ± 1/32	
SCALE FULL	DECIMALS	
DIMENSIONS ARE IN INCHES	0.X = ± 0.05 0.XX = ± 0.005 0.XXX = ±	SHEET OF
MATERIAL: MILD STEEL	DRAWING NO. 5130	ANGLES = °

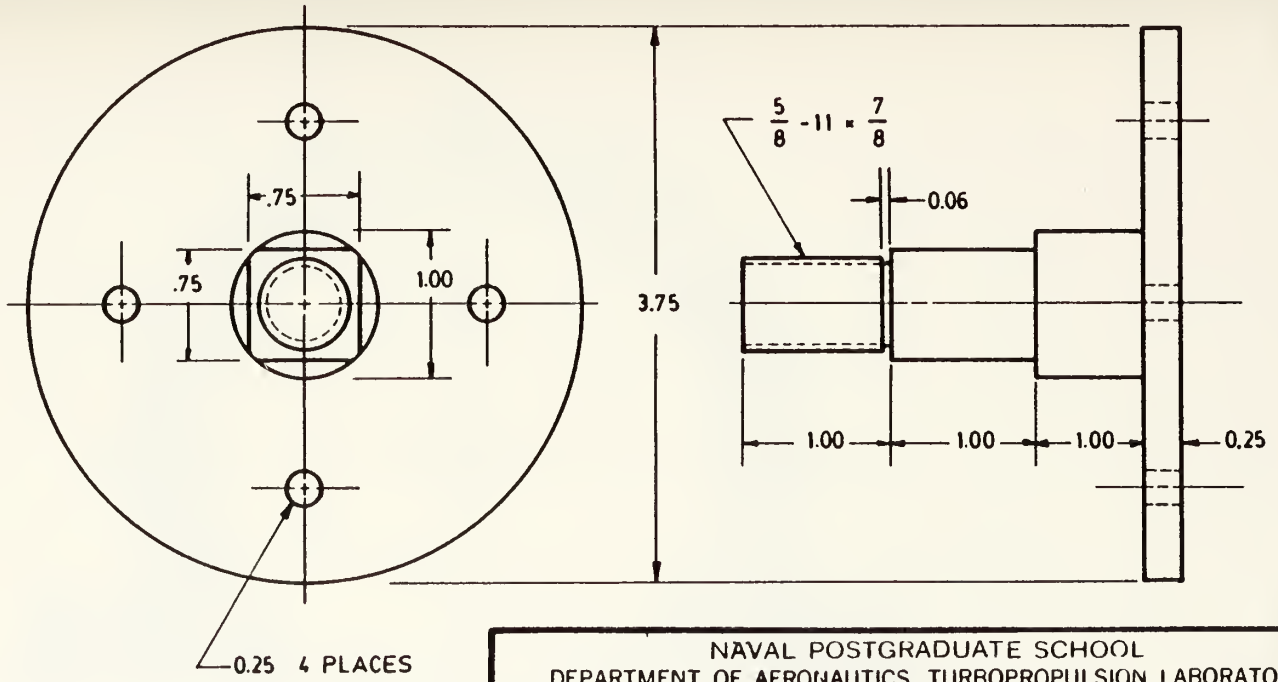

NAVAL POSTGRADUATE SCHOOL
DEPARTMENT OF AERONAUTICS, TURBOPROPULSION LABORATORY
MONTEREY, CALIF. 93940

SHAFT

DRAWN BY	R. G. McGuire
DATE	23 FEB 1983
SCALE	FULL
DIMENSIONS ARE IN INCHES	
DRAWING NO.	5132

TOLERANCES
FRACTIONS = ± 1/32
DECIMALS
0.X = ±
0.XX = ± 0.005
0.XXX = ±
ANGLES = °

SHEET
OF

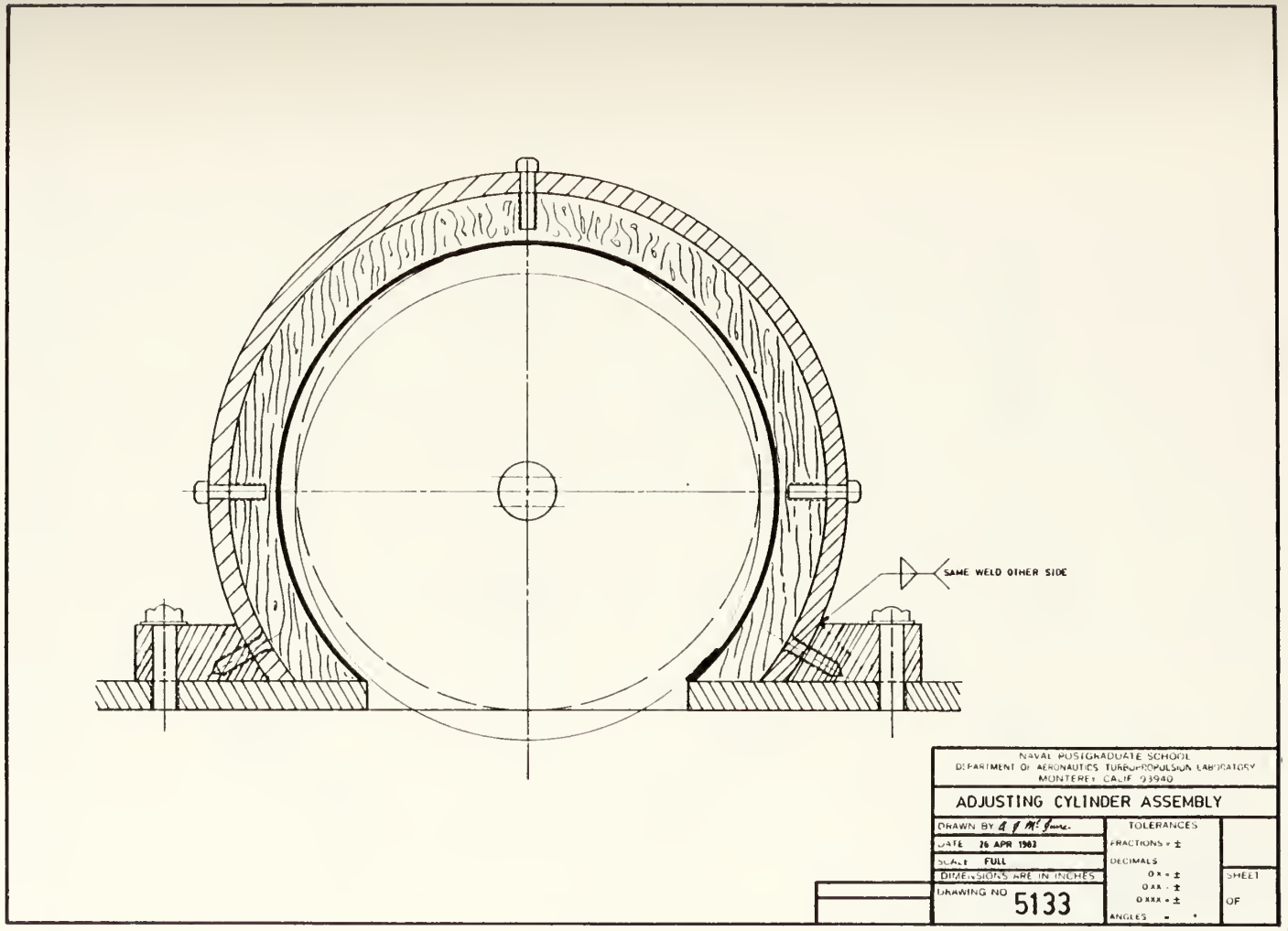

NAVAL POSTGRADUATE SCHOOL
DEPARTMENT OF AERONAUTICS TURBOPROPULSION LABORATORY
MONTEREY CALIF. 93940

ADJUSTING CYLINDER ASSEMBLY

DRAWN BY	A J McGuire
DATE	26 APR 1983
SCALE	FULL
DIMENSIONS ARE IN INCHES	
DRAWING NO	5133

TOLERANCES
FRACTIONS ±
DECIMALS
0 x ±
0 xx ±
0 xxx ±
ANGLES ° '

SHEET
OF

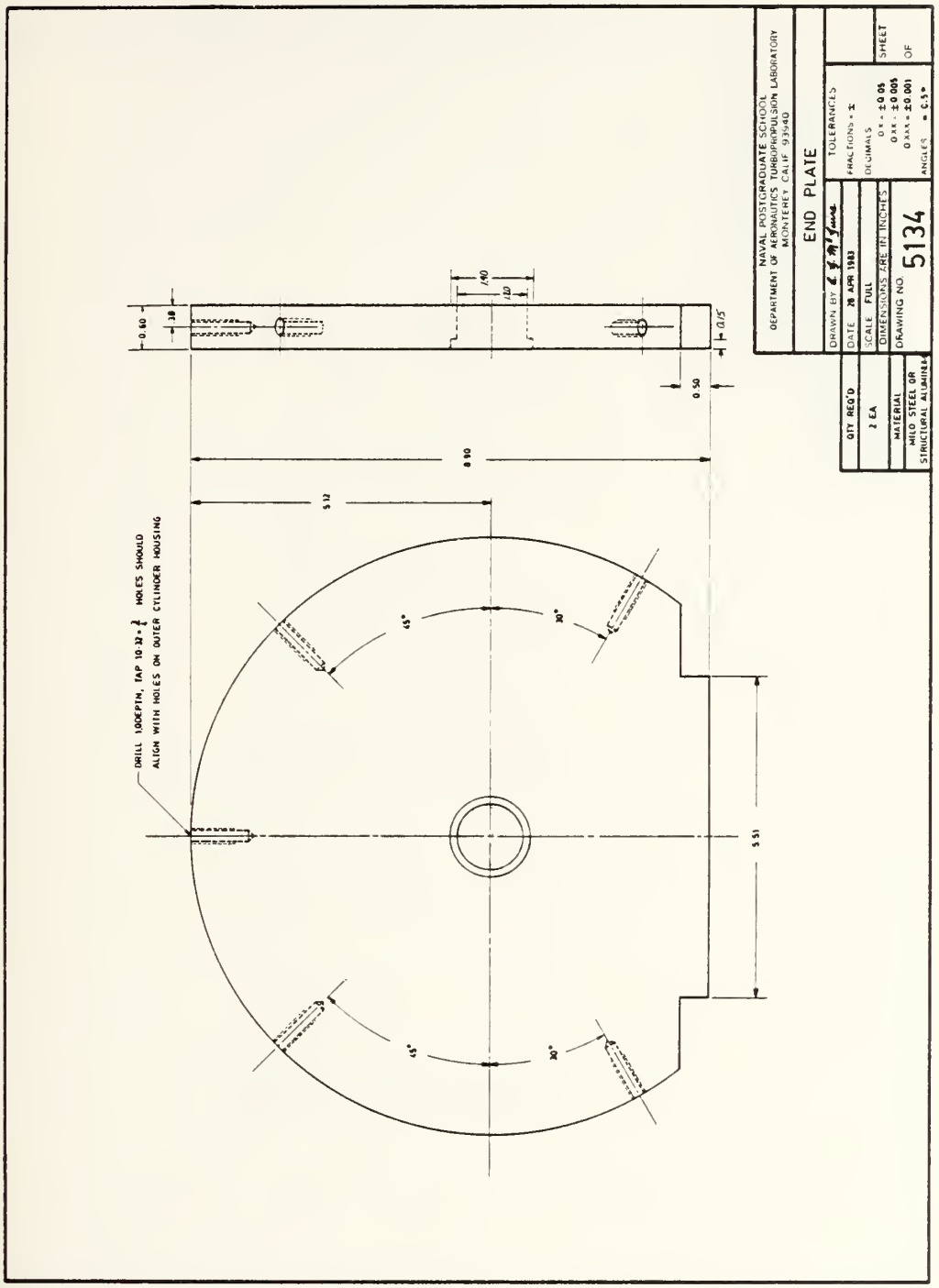
NAVAL POSTGRADUATE SCHOOL
DEPARTMENT OF AERONAUTICS TURBOPROPULSION LABORATORY
MONTEREY CALIF 93940
END PLATE
DRAWN BY
DATE 28 APR 1983
SCALE FULL
DIMENSIONS ARE IN INCHES
DRAWING NO. 5134
TOLERANCES
FRACTIONS ± 1/64
DECIMALS
0.X ± 0.05
0.XX ± 0.005
0.XXX ± 0.001
ANGLES ± 0.5°
QTY REQ'D
2 EA
MATERIAL
MIL-S STEEL OR STRUCTURAL ALUMINUM
SHEET
OF
DRILL 1.00 DEPTH, TAP 10-32 × 1/2 HOLES SHOULD ALIGN WITH HOLES ON OUTER CYLINDER HOUSING
0.60
.38
.40
.10
.15
0.50
8.90
5.12
5.51
45°
30°
45°
30°

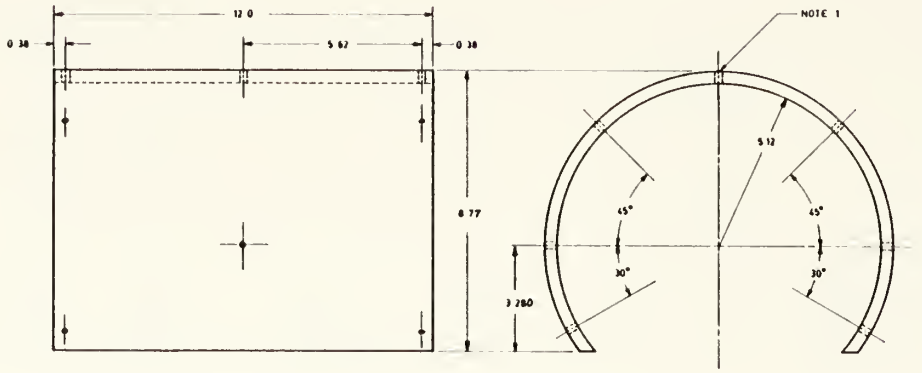

NOTE 1 DRILL ALL HOLES 7/32

NAVAL POSTGRADUATE SCHOOL
DEPARTMENT OF AERONAUTICS TURBOPROPULSION LABORATORY
MONTEREY CALIF 93940

OUTER CYLINDER HOUSING

QTY REQ'D	DRAWN BY R. J. McGuire	TOLERANCES	
1	DATE 4 MAY 1983	FRACTIONS = ±	
MATERIAL	SCALE HALF	DECIMALS	SHEET
11 DIA x 3/8 ALUMINUM TUBE	DIMENSIONS ARE IN INCHES	0 X = ± 0.03 0 XX = ± 0.005 0 XXX = ± 0.002	OF
	DRAWING NO 5135	ANGLES = 0.5°	

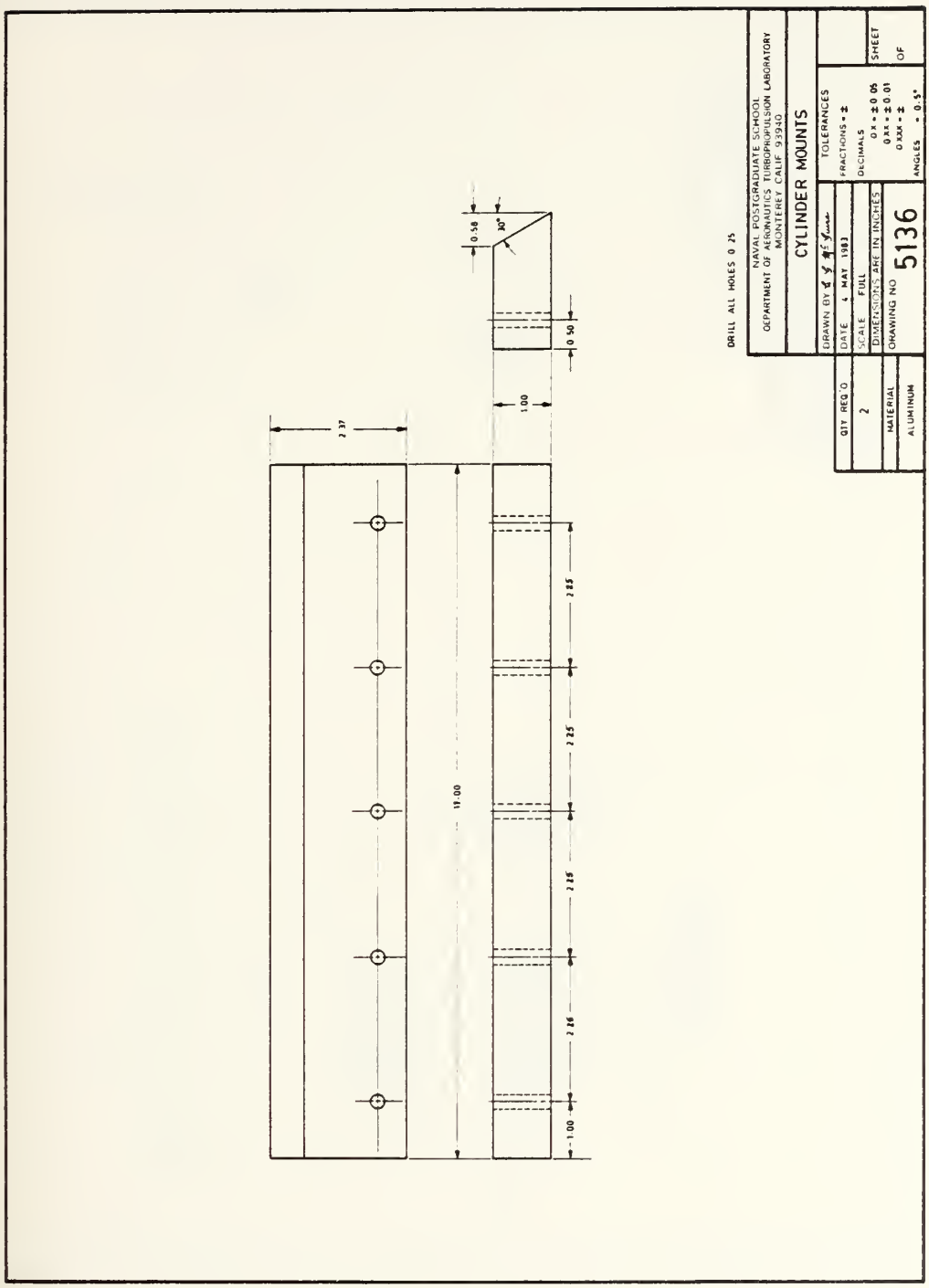
DRILL ALL HOLES 0 25
NAVAL POSTGRADUATE SCHOOL
DEPARTMENT OF AERONAUTICS TURBOPROPULSION LABORATORY
MONTEREY CALIF 93940
CYLINDER MOUNTS
DRAWN BY
DATE 4 MAY 1983
SCALE FULL
DIMENSIONS ARE IN INCHES
DRAWING NO 5136
TOLERANCES
FRACTIONS = ±
DECIMALS
0 X = ± 0 05
0 XX = ± 0 01
0 XXX = ±
ANGLES = 0.5°
SHEET
OF
QTY REQ'D 2
MATERIAL ALUMINUM
0.50
30°
0.50
1.00
2.37
11.00
2.25
2.25
2.25
2.26
1.00

(3 REQ'D)

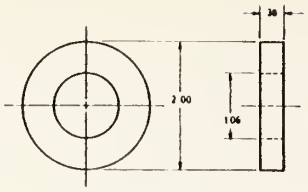

SPACER

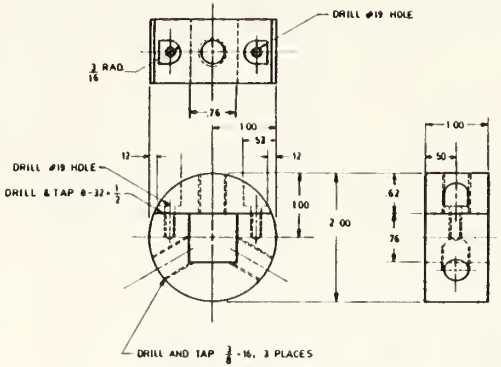

CONTROL WHEEL HUB
(ONLY ONE REQUIRED)

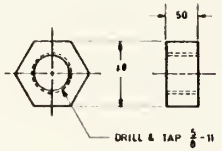

NUT

NAVAL POSTGRADUATE SCHOOL
DEPARTMENT OF AERONAUTICS TURBOPROPULSION LABORATORY
MONTEREY CALIF 93940

ATTACHING CYLINDER PARTS

QTY REQ'D	DRAWN BY E G McGuire	TOLERANCES	
2 EA PER UNIT	DATE 27 JUNE 1983	FRACTIONS = ±	
MATERIAL	SCALE FULL	DECIMALS	SHEET
STEEL	DIMENSIONS ARE IN INCHES	0 x = ±0 05	
	DRAWING NO 5137	0 xx = ±0 005	OF
		0 xxx = ±	
		ANGLES - °	

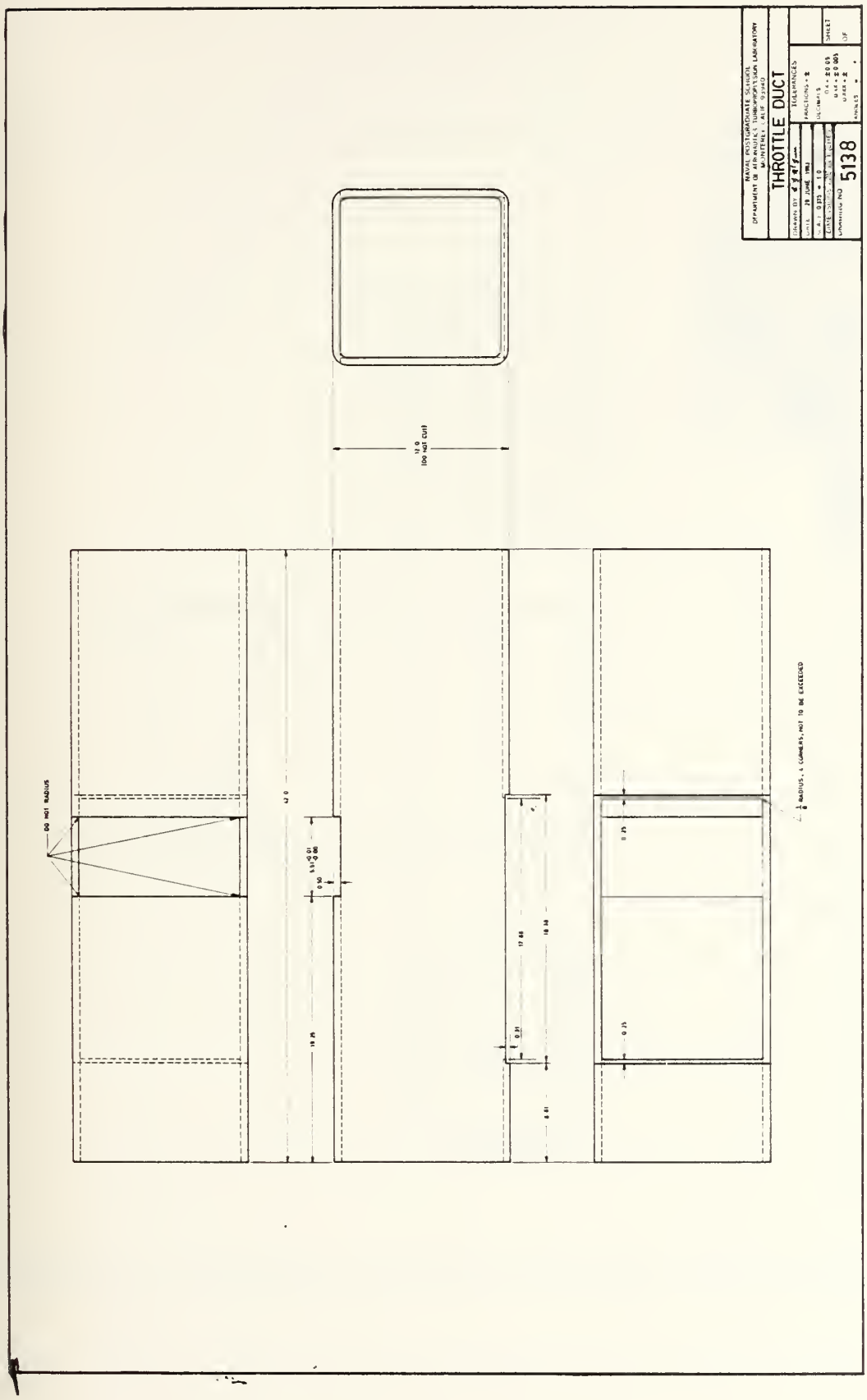
NAVAL POSTGRADUATE SCHOOL
DEPARTMENT OF AERONAUTICS TURBOPROPULSION LABORATORY
MONTEREY, CALIF 93940
THROTTLE DUCT
TOLERANCES
DRAWING NO 5138
SHEET
OF
DO NOT RADIUS
12.0
(DO NOT CUT)
1/8 RADIUS, 4 CORNERS, NOT TO BE EXCEEDED

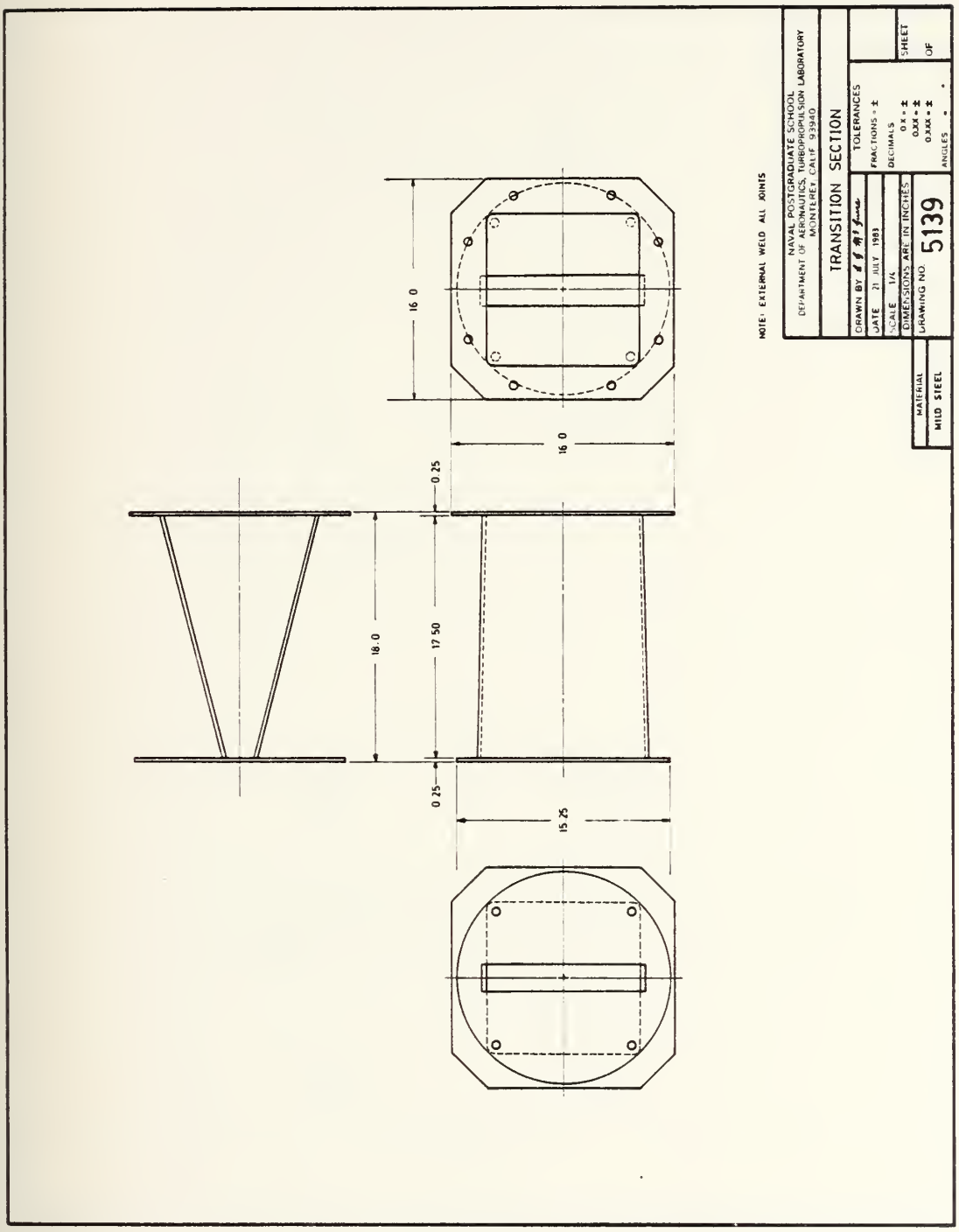
NOTE: EXTERNAL WELD ALL JOINTS
NAVAL POSTGRADUATE SCHOOL
DEPARTMENT OF AERONAUTICS, TURBOPROPULSION LABORATORY
MONTEREY, CALIF 93940
TRANSITION SECTION
DRAWN BY
DATE 21 JULY 1983
SCALE 1/4
DIMENSIONS ARE IN INCHES
DRAWING NO. 5139
TOLERANCES
FRACTIONS = ±
DECIMALS
0.X = ±
0.XX = ±
0.XXX = ±
ANGLES
SHEET
OF
MATERIAL
MILD STEEL
16.0
16.0
0.25
18.0
17.50
0.25
15.25

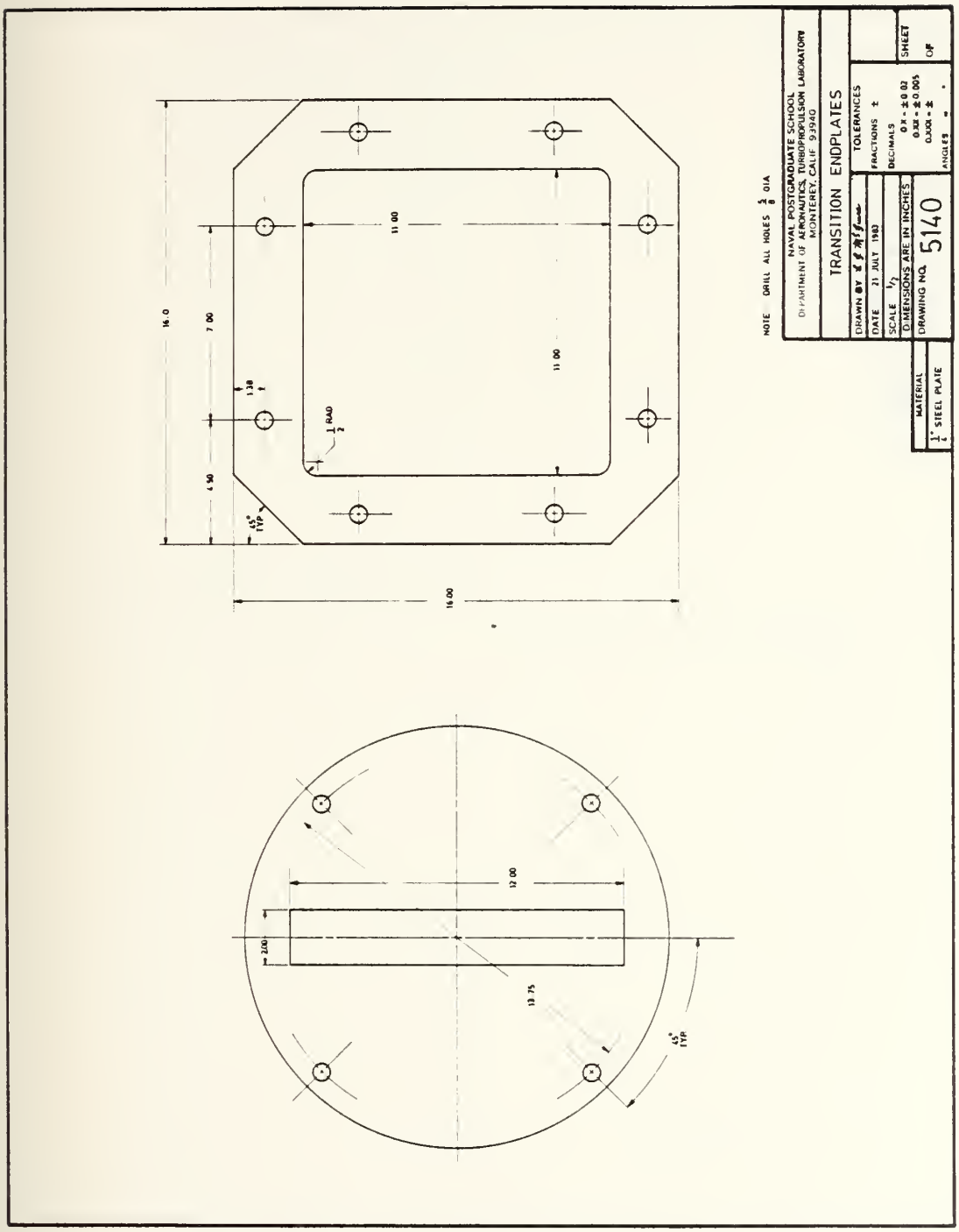
NOTE DRILL ALL HOLES 5/8 DIA
NAVAL POSTGRADUATE SCHOOL
DEPARTMENT OF AERONAUTICS, TURBOPROPULSION LABORATORY
MONTEREY, CALIF 93940
TRANSITION ENDPLATES
DRAWN BY
DATE 21 JULY 1983
SCALE 1/2
DIMENSIONS ARE IN INCHES
DRAWING NO. 5140
TOLERANCES
FRACTIONS ±
DECIMALS
0.X = ±0.02
0.XX = ±0.005
0.XXX = ±
ANGLES
SHEET
OF
MATERIAL
1/4" STEEL PLATE
16.0
7.00
4.50
1.38
1/2 RAD
45° TYP
11.00
11.00
16.00
12.00
2.00
13.75
45° TYP

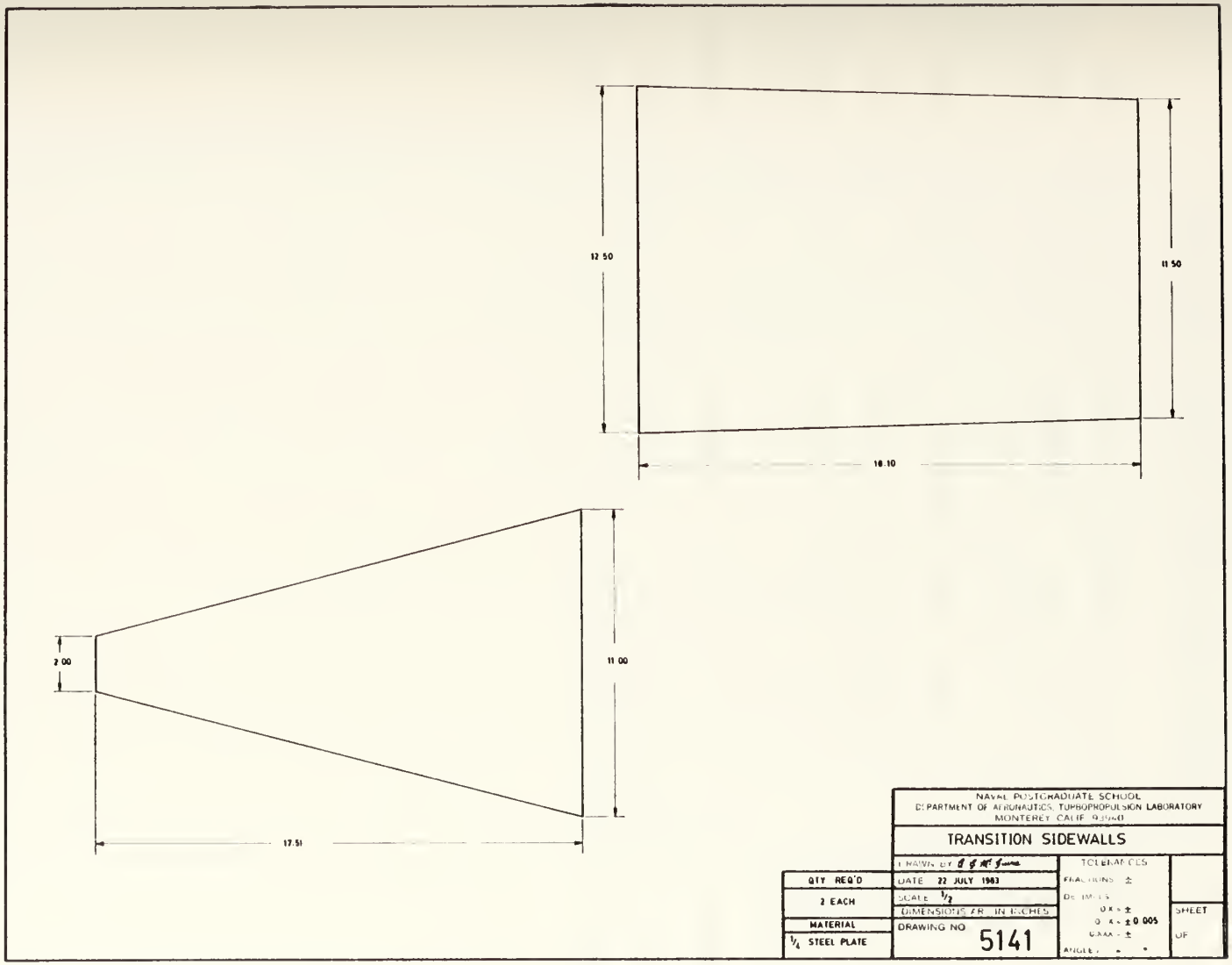
12.50
11.50
18.10
2.00
11.00
17.51
NAVAL POSTGRADUATE SCHOOL
DEPARTMENT OF AERONAUTICS TURBOPROPULSION LABORATORY
MONTEREY, CALIF. 93940
TRANSITION SIDEWALLS
DRAWN BY
DATE 22 JULY 1983
SCALE 1/2
DIMENSIONS ARE IN INCHES
DRAWING NO. 5141
TOLERANCES
FRACTIONS ±
DECIMALS
XX ± 0.005
ANGLES
QTY REQ'D
2 EACH
MATERIAL
1/4 STEEL PLATE
SHEET
OF

APPENDIX D

DATA SET FOR 70% RPM, OPEN THROTTLE

This appendix contains a listing of the one complete set of data and reduced parameters. The data in the first twelve files were transcribed from files W54501 to W54512 obtained by program WKAQN on the HP 21MX Data Acquisiton System to the IBM 3033. The following tables contain the values of pressure in units of inches of water that were used to qualitatively inspect the data. The third set of tables contain the file of pressures after they had been expanded to 16 x 256 arrays. The final set of tables contain the pressure coefficients that were plotted as contours and also compared with the analytical solution.

AVERAGE UNSTEADY WALL PRESSURE DATA -- FILE - W54501

-.1737	-.1792	-.1714	-.1768	-.1789	-.1708	-.1734	-.1727
-.1730	-.1740	-.1820	-.1768	-.1770	-.1815	-.1809	-.1828
-.1851	-.1807	-.1824	-.1916	-.1866	-.1870	-.1875	-.1885
-.1881	-.1833	-.1928	-.1904	-.1991	-.1972	-.1930	-.1966
-.1988	-.1999	-.2014	-.1966	-.2051	-.2031	-.1994	-.2000
-.2040	-.2007	-.2029	-.2023	-.2064	-.2074	-.2106	-.2138
-.2099	-.2132	-.2133	-.2071	-.2086	-.2152	-.2149	-.2182
-.2175	-.3132	-.2218	-.2207	-.2182	-.2210	-.2143	-.2183
-.2222	-.2231	-.2217	-.2225	-.2219	-.2289	-.2157	-.2294
-.2242	-.2337	-.2156	-.2130	-.2285	-.2191	-.2143	-.2299
-.2143	-.2146	-.2066	-.2172	-.2066	-.1985	-.1995	-.1881
-.2007	-.2055	-.2003	-.1994	-.1969	-.1911	-.1919	-.1951
-.1928	-.1889	-.1865	-.1927	-.1863	-.1898	-.1909	-.1937
-.1949	-.1978	-.1962	-.1855	-.1896	-.1925	-.1934	-.1944
-.1982	-.1889	-.1905	-.1881	-.1953	-.1877	-.1854	-.1847
-.1794	-.1806	-.1758	-.1801	-.1802	-.1874	-.1793	-.1816
-.1794	-.1696	-.1842	-.1780	-.1725	-.1685	-.1725	-.1816
-.1717	-.1679	-.1691	-.1756	-.1768	-.1780	-.1766	-.1762
-.1788	-.1797	-.1852	-.1894	-.1800	-.1888	-.1866	-.1875
-.1845	-.1898	-.1878	-.1917	-.1918	-.1868	-.1905	-.1915
-.1985	-.1911	-.1922	-.1961	-.1963	-.1959	-.1911	-.2000
-.2036	-.1952	-.1967	-.1976	-.1989	-.1955	-.2026	-.1990
-.2003	-.2031	-.2009	-.2015	-.2025	-.2087	-.2119	-.2042
-.2074	-.2091	-.2123	-.2116	-.2094	-.2165	-.2185	-.2166
-.2129	-.2137	-.2148	-.2092	-.2171	-.2085	-.2106	-.2101
-.2059	-.2121	-.2175	-.2078	-.2139	-.2106	-.2018	-.1945
-.1965	-.1969	-.1911	-.2034	-.1985	-.1866	-.1905	-.1902
-.1972	-.1761	-.1865	-.1920	-.1873	-.1789	-.1888	-.1863
-.1848	-.1850	-.1864	-.1765	-.1832	-.1838	-.1926	-.1777
-.1900	-.1891	-.1868	-.1855	-.1875	-.1917	-.1923	-.1866
-.1931	-.1863	-.1865	-.1881	-.1902	-.1825	-.1820	-.1818
-.1738	-.1896	-.1783	-.1845	-.1777	-.1742	-.1766	-.1714

AVERAGE UNSTEADY WALL PRESSURE DATA -- FILE - W54502

-.1692	-.1756	-.1678	-.1768	-.1712	-.1809	-.1795	-.1878
-.1873	-.1930	-.1884	-.1852	-.1946	-.1886	-.1984	-.2112
-.1954	-.1944	-.1981	-.2063	-.2082	-.2077	-.2113	-.2084
-.2179	-.2178	-.2207	-.2238	-.2238	-.2291	-.2340	-.2327
-.2360	-.2347	-.2396	-.2452	-.2438	-.2476	-.2502	-.2524
-.2505	-.2542	-.2552	-.2582	-.2631	-.2650	-.2662	-.2640
-.2614	-.2663	-.2656	-.2718	-.2731	-.2728	-.2720	-.2818
-.2735	-.2702	-.2827	-.2789	-.2613	-.2627	-.2603	-.2609
-.2709	-.2799	-.2510	-.2588	-.2467	-.2470	-.2310	-.2574
-.2320	-.2219	-.2427	-.2147	-.2267	-.2186	-.2269	-.2082
-.2162	-.2057	-.2137	-.1888	-.2150	-.2040	-.2095	-.2009
-.1982	-.2054	-.2134	-.1971	-.1890	-.1750	-.1871	-.1744
-.1924	-.1625	-.1613	-.1679	-.1648	-.1750	-.1694	-.1602
-.1618	-.1740	-.1594	-.1672	-.1714	-.1712	-.1642	-.1698
-.1713	-.1742	-.1728	-.1681	-.1607	-.1714	-.1658	-.1690
-.1681	-.1646	-.1698	-.1606	-.1638	-.1640	-.1724	-.1774
-.1727	-.1714	-.1801	-.1720	-.1827	-.1824	-.1761	-.1837
-.1849	-.1904	-.1887	-.1868	-.1885	-.1928	-.1931	-.1987
-.1972	-.1984	-.2011	-.2042	-.2027	-.2051	-.2110	-.2138
-.2127	-.2140	-.2148	-.2162	-.2190	-.2160	-.2274	-.2257
-.2266	-.2303	-.2339	-.2333	-.2347	-.2365	-.2353	-.2324
-.2398	-.2406	-.2443	-.2384	-.2447	-.2443	-.2440	-.2455
-.2495	-.2463	-.2414	-.2447	-.2455	-.2508	-.2426	-.2448
-.2507	-.2483	-.2440	-.2427	-.2530	-.2435	-.2346	-.2249
-.2300	-.2416	-.2200	-.2272	-.2212	-.2215	-.2143	-.2076
-.2128	-.2153	-.2053	-.2142	-.2090	-.2098	-.2065	-.2089
-.2130	-.2124	-.2110	-.1996	-.2095	-.1892	-.1927	-.2034
-.2039	-.1913	-.1728	-.1969	-.1903	-.1792	-.1691	-.1853
-.1671	-.1790	-.1730	-.1760	-.1675	-.1594	-.1691	-.1562
-.1597	-.1660	-.1700	-.1728	-.1598	-.1742	-.1698	-.1663
-.1629	-.1642	-.1702	-.1693	-.1661	-.1647	-.1653	-.1680
-.1696	-.1719	-.1628	-.1679	-.1590	-.1665	-.1708	-.1646

AVERAGE UNSTEADY WALL PRESSURE DATA -- FILE - W54503

-.1784	-.1766	-.1860	-.1822	-.2000	-.1900	-.2056	-.2046
-.2124	-.2222	-.2152	-.2214	-.2323	-.2374	-.2381	-.2430
-.2533	-.2564	-.2590	-.2604	-.2662	-.2698	-.2791	-.2889
-.2817	-.2894	-.2940	-.2969	-.2980	-.3003	-.3083	-.3147
-.3140	-.3140	-.3232	-.3219	-.3294	-.3267	-.3290	-.3299
-.3324	-.3377	-.3409	-.3414	-.3398	-.3425	-.3383	-.3432
-.3441	-.3477	-.3454	-.3386	-.3374	-.3508	-.3391	-.3458
-.3136	-.3257	-.3072	-.2961	-.2883	-.3089	-.2679	-.2564
-.2646	-.2609	-.2482	-.2710	-.2245	-.2316	-.2175	-.2373
-.2302	-.2206	-.2475	-.2067	-.2186	-.2087	-.2242	-.2014
-.2119	-.1985	-.2060	-.2050	-.2002	-.2049	-.1985	-.1868
-.1898	-.1857	-.1750	-.1917	-.1885	-.1855	-.1805	-.1827
-.1970	-.1754	-.1835	-.1856	-.1692	-.1701	-.1684	-.1674
-.1678	-.1676	-.1613	-.1542	-.1657	-.1655	-.1634	-.1575
-.1602	-.1595	-.1619	-.1599	-.1645	-.1676	-.1622	-.1684
-.1657	-.1590	-.1678	-.1711	-.1719	-.1695	-.1775	-.1710
-.1786	-.1778	-.1815	-.1894	-.1932	-.1961	-.2059	-.1997
-.2139	-.2160	-.2237	-.2262	-.2268	-.2240	-.2321	-.2391
-.2403	-.2519	-.2534	-.2572	-.2592	-.2615	-.2643	-.2701
-.2715	-.2802	-.2779	-.2821	-.2840	-.2905	-.2865	-.2892
-.2921	-.2926	-.2911	-.2990	-.2910	-.3002	-.2940	-.3026
-.2886	-.3003	-.3017	-.2968	-.2935	-.3003	-.2904	-.2921
-.2846	-.2913	-.2849	-.2864	-.2786	-.2804	-.2877	-.2476
-.2769	-.2839	-.2654	-.2684	-.2632	-.2502	-.2691	-.2476
-.2460	-.2672	-.2591	-.2476	-.2517	-.2374	-.2160	-.2312
-.2228	-.2055	-.2167	-.2270	-.2238	-.2156	-.1992	-.2201
-.1984	-.2088	-.2005	-.2044	-.2216	-.2095	-.1929	-.1932
-.1832	-.1860	-.1921	-.1904	-.1913	-.1888	-.1937	-.1864
-.1949	-.1766	-.1766	-.1739	-.1801	-.1727	-.1728	-.1702
-.1688	-.1692	-.1586	-.1613	-.1564	-.1637	-.1605	-.1659
-.1686	-.1609	-.1601	-.1543	-.1590	-.1561	-.1643	-.1596
-.1565	-.1695	-.1561	-.1634	-.1614	-.1680	-.1640	-.1715

AVERAGE UNSTEADY WALL PRESSURE DATA -- FILE - W54504

-.1680	-.1804	-.1868	-.1997	-.2043	-.2102	-.2282	-.2271
-.2363	-.2445	-.2451	-.2529	-.2637	-.2746	-.2763	-.2850
-.2876	-.2941	-.2959	-.3006	-.3115	-.3188	-.3191	-.3272
-.3275	-.3357	-.3412	-.3456	-.3484	-.3499	-.3562	-.3578
-.3644	-.3689	-.3690	-.3666	-.3714	-.3788	-.3821	-.3845
-.3819	-.3842	-.3782	-.3890	-.3721	-.3846	-.3888	-.3875
-.3734	-.3776	-.3397	-.3626	-.3593	-.3260	-.3582	-.2981
-.3375	-.2762	-.2280	-.2355	-.2591	-.2356	-.2447	-.2233
-.2327	-.2102	-.2109	-.2009	-.1928	-.2108	-.1959	-.1945
-.2116	-.1974	-.1993	-.2122	-.2019	-.2202	-.1948	-.1977
-.1975	-.1901	-.1706	-.1683	-.1559	-.1528	-.1412	-.1388
-.1497	-.1490	-.1435	-.1259	-.1328	-.1304	-.1461	-.1330
-.1320	-.1356	-.1396	-.1453	-.1280	-.1318	-.1234	-.1253
-.1203	-.1245	-.1177	-.1225	-.1134	-.1169	-.1179	-.1066
-.1130	-.0996	-.1181	-.1151	-.1139	-.1173	-.1236	-.1263
-.1292	-.1285	-.1374	-.1544	-.1565	-.1612	-.1682	-.1567
-.1741	-.1901	-.1948	-.2041	-.2074	-.2212	-.2207	-.2320
-.2382	-.2465	-.2502	-.2546	-.2561	-.2646	-.2704	-.2749
-.2806	-.2816	-.2872	-.2949	-.2921	-.3020	-.2995	-.3033
-.3076	-.3076	-.3144	-.3069	-.3138	-.3218	-.3164	-.3226
-.3266	-.3182	-.3173	-.3264	-.3219	-.3308	-.3171	-.3325
-.3147	-.3269	-.3088	-.3139	-.3073	-.3108	-.3018	-.2916
-.3144	-.2809	-.2523	-.3038	-.2858	-.2911	-.2751	-.2605
-.2476	-.2556	-.2283	-.2398	-.2159	-.2331	-.2196	-.2302
-.2200	-.2328	-.2212	-.2339	-.2168	-.2182	-.2235	-.2169
-.2157	-.2063	-.2126	-.2172	-.2217	-.2117	-.1979	-.2065
-.1962	-.1881	-.1746	-.1648	-.1613	-.1464	-.1396	-.1331
-.1332	-.1327	-.1396	-.1421	-.1378	-.1428	-.1392	-.1358
-.1441	-.1344	-.1435	-.1321	-.1405	-.1309	-.1276	-.1311
-.1312	-.1202	-.1115	-.1122	-.1135	-.1147	-.1185	-.1163
-.1148	-.1214	-.1104	-.1081	-.1126	-.1141	-.1180	-.1159
-.1269	-.1311	-.1319	-.1282	-.1370	-.1433	-.1432	-.1502

AVERAGE UNSTEADY WALL PRESSURE DATA -- FILE - W54505

-.1406	-.1842	-.1820	-.1926	-.2051	-.2366	-.2288	-.2376
-.2493	-.2598	-.2760	-.2841	-.2987	-.3092	-.3161	-.3156
-.3168	-.3306	-.3407	-.3505	-.3612	-.3596	-.3665	-.3733
-.3796	-.3783	-.3845	-.3849	-.3946	-.3925	-.3949	-.3964
-.3966	-.3963	-.3967	-.4014	-.3951	-.3969	-.3989	-.3936
-.3918	-.3869	-.3936	-.3924	-.3830	-.3701	-.3802	-.3731
-.3461	-.3672	-.3536	-.3370	-.3368	-.3157	-.3304	-.2782
-.2966	-.2434	-.2544	-.2420	-.2482	-.2225	-.2680	-.2010
-.1849	-.1804	-.2012	-.1874	-.1643	-.1702	-.1590	-.1477
-.1686	-.1421	-.1469	-.1520	-.1513	-.1580	-.1605	-.1585
-.1438	-.1482	-.1593	-.1566	-.1491	-.1434	-.1450	-.1324
-.1305	-.1251	-.1298	-.1309	-.1250	-.1176	-.1228	-.1171
-.1180	-.0963	-.1067	-.0965	-.0821	-.0891	-.0829	-.0974
-.0781	-.0725	-.0736	-.0706	-.0572	-.0652	-.0632	-.0520
-.0644	-.0613	-.0499	-.0549	-.0572	-.0495	-.0724	-.0830
-.0740	-.0831	-.0976	-.1108	-.1160	-.1316	-.1354	-.1607
-.1644	-.1910	-.1903	-.2106	-.2153	-.2247	-.2438	-.2475
-.2560	-.2660	-.2744	-.2811	-.2925	-.2974	-.2987	-.2925
-.3114	-.3196	-.3196	-.3268	-.3268	-.3363	-.3336	-.3410
-.3379	-.3317	-.3357	-.3285	-.3311	-.3257	-.3334	-.3340
-.3306	-.3263	-.3302	-.3226	-.3239	-.3237	-.3228	-.3283
-.3222	-.3091	-.3163	-.3310	-.3024	-.3170	-.2825	-.2922
-.3142	-.2971	-.2894	-.2718	-.2885	-.2677	-.2713	-.2665
-.2421	-.2238	-.2472	-.2343	-.2220	-.2232	-.2254	-.2182
-.2200	-.2174	-.2400	-.1959	-.2091	-.1997	-.2221	-.1976
-.1857	-.1765	-.1883	-.1818	-.1644	-.1683	-.1761	-.1650
-.1620	-.1556	-.1549	-.1498	-.1561	-.1507	-.1451	-.1472
-.1339	-.1374	-.1433	-.1392	-.1157	-.1259	-.1141	-.1125
-.1177	-.1083	-.0973	-.0961	-.1037	-.0977	-.0893	-.0862
-.0871	-.0815	-.0720	-.0755	-.0729	-.0686	-.0678	-.0588
-.0587	-.0541	-.0640	-.0502	-.0636	-.0553	-.0574	-.0646
-.0729	-.0704	-.0686	-.0793	-.0845	-.0975	-.1168	-.1340

AVERAGE UNSTEADY WALL PRESSURE DATA -- FILE - W54506

-.2598	-.2636	-.2987	-.3012	-.3183	-.3355	-.3432	-.3467
-.3666	-.3819	-.3956	-.3908	-.3990	-.4218	-.4269	-.4268
-.4354	-.4381	-.4453	-.4508	-.4560	-.4534	-.4622	-.4652
-.4693	-.4757	-.4736	-.4765	-.4797	-.4749	-.4792	-.4709
-.4733	-.4739	-.4643	-.4662	-.4720	-.4628	-.4560	-.4670
-.4488	-.4466	-.4650	-.4269	-.4273	-.4198	-.4256	-.4104
-.3380	-.4071	-.3317	-.3011	-.3208	-.2444	-.2754	-.2357
-.2467	-.2852	-.2320	-.1887	-.2039	-.2221	-.1791	-.2054
-.1630	-.1721	-.1421	-.1721	-.1514	-.1560	-.1572	-.1506
-.1616	-.1760	-.1484	-.1620	-.1539	-.1517	-.1361	-.1579
-.1464	-.1413	-.1447	-.1315	-.1240	-.1210	-.1191	-.1119
-.0992	-.0987	-.1071	-.1007	-.0984	-.0830	-.0866	-.0836
-.0908	-.0736	-.0716	-.0477	-.0474	-.0600	-.0302	-.0254
-.0095	-.0134	-.0047	0.0027	0.0167	0.0236	0.0461	0.0421
0.0436	0.0384	0.0525	0.0247	0.0197	-.0093	-.0390	-.0406
-.0592	-.0843	-.1388	-.1405	-.1602	-.1988	-.2042	-.2460
-.2667	-.2864	-.2922	-.3111	-.3118	-.3258	-.3428	-.3482
-.3521	-.3573	-.3619	-.3693	-.3736	-.3767	-.3820	-.3846
-.3841	-.3888	-.3943	-.3882	-.3917	-.3853	-.3935	-.3892
-.3881	-.3878	-.3836	-.4033	-.4004	-.3935	-.3900	-.3918
-.3937	-.3791	-.3905	-.3922	-.3838	-.3725	-.3740	-.3711
-.3595	-.3599	-.3165	-.3395	-.3131	-.3670	-.2952	-.2954
-.3120	-.2677	-.2801	-.2694	-.2728	-.2718	-.2478	-.2626
-.2552	-.2547	-.2512	-.2499	-.2242	-.2481	-.2701	-.2506
-.2130	-.2367	-.2176	-.1892	-.2212	-.1999	-.1742	-.1769
-.1769	-.1798	-.1685	-.1489	-.1546	-.1542	-.1403	-.1425
-.1524	-.1431	-.1330	-.1185	-.1338	-.1207	-.1276	-.1211
-.1144	-.1025	-.1112	-.1083	-.1054	-.0920	-.1076	-.0930
-.0822	-.0763	-.0756	-.0685	-.0709	-.0622	-.0517	-.0497
-.0291	-.0236	-.0117	0.0020	0.0062	0.0157	0.0260	0.0342
0.0394	0.0433	0.0577	0.0394	0.0497	0.0207	0.0228	0.0125
-.0147	-.0302	-.0758	-.0980	-.1176	-.1286	-.1300	-.1789

AVERAGE UNSTEADY WALL PRESSURE DATA -- FILE - W54507

-.0974	-.1354	-.1413	-.1634	-.2119	-.2103	-.2476	-.2553
-.2884	-.3123	-.3575	-.3545	-.3851	-.4119	-.4333	-.4434
-.4416	-.4555	-.4724	-.4822	-.4916	-.5015	-.5028	-.5031
-.5034	-.5013	-.4972	-.4898	-.5015	-.5088	-.4977	-.4744
-.4837	-.4550	-.4646	-.4615	-.4532	-.4232	-.4481	-.4298
-.3857	-.4068	-.3842	-.3748	-.2885	-.3635	-.2496	-.3130
-.2863	-.2837	-.2550	-.2607	-.2231	-.2237	-.2348	-.2112
-.1877	-.2177	-.1988	-.1993	-.1790	-.1947	-.1769	-.1922
-.1672	-.1815	-.2004	-.1476	-.1742	-.1508	-.1485	-.1490
-.1377	-.1497	-.1494	-.1502	-.1508	-.1367	-.1272	-.1394
-.1351	-.1300	-.1106	-.1269	-.1205	-.1100	-.1162	-.1113
-.1012	-.1076	-.0989	-.0944	-.1071	-.0876	-.0795	-.0716
-.0602	-.0534	-.0482	-.0304	-.0368	-.0175	-.0268	-.0111
-.0213	C.0011	-.0019	0.0051	C.0136	0.0031	0.0125	0.0090
0.0135	C.0060	-.0017	-.0169	-.0248	-.0281	-.0345	-.0341
-.0458	-.0403	-.0612	-.0731	-.0874	-.0959	-.1259	-.1490
-.1734	-.1730	-.1909	-.2223	-.2439	-.2633	-.2852	-.3013
-.3131	-.3250	-.3588	-.3647	-.3894	-.4027	-.4142	-.4260
-.4331	-.4382	-.4382	-.4443	-.4383	-.4311	-.4352	-.4273
-.4105	-.4187	-.4018	-.4144	-.4044	-.4000	-.3997	-.3495
-.3714	-.3570	-.3492	-.3231	-.3444	-.3492	-.3216	-.3444
-.3359	-.3153	-.3106	-.2953	-.2980	-.3047	-.2960	-.2840
-.2999	-.2832	-.3182	-.2477	-.2522	-.2728	-.2636	-.2389
-.2720	-.2555	-.2233	-.2274	-.2141	-.2019	-.2023	-.2043
-.1885	-.1979	-.2023	-.2061	-.1825	-.1843	-.1577	-.1673
-.1559	-.1642	-.1728	-.1346	-.1314	-.1277	-.1438	-.1323
-.1250	-.1351	-.1199	-.1201	-.1228	-.1160	-.1071	-.1096
-.1009	-.0996	-.1110	-.0922	-.0878	-.0797	-.0746	-.0656
-.0710	-.0606	-.0605	-.0482	-.0459	-.0416	-.0215	-.0283
-.0039	-.0061	0.0056	0.0109	C.0076	0.0208	0.0231	0.0252
0.0350	C.0365	0.0402	0.0322	C.0321	0.0236	0.0189	C.0304
0.0059	C.0207	0.0162	0.0034	-.0128	-.0082	-.0357	-.0478

AVERAGE UNSTEADY WALL PRESSURE DATA -- FILE - W54508

0.0084	C.0C36	0.0040	0.0072	-.0008	0.0006	0.0051	C.0069
0.0128	C.0183	0.0138	0.0113	C.0190	0.0209	0.0192	C.0068
0.0184	C.0027	-.0071	-.0143	-.0260	-.0363	-.0580	-.0856
-.0948	-.1321	-.1738	-.2119	-.2356	-.2667	-.3071	-.3184
-.3394	-.3636	-.3622	-.3623	-.3591	-.3752	-.3794	-.4310
-.3696	-.4606	-.4388	-.3539	-.3483	-.3610	-.3641	-.3269
-.3435	-.3640	-.3255	-.3230	-.3498	-.3192	-.3245	-.3242
-.3037	-.3050	-.2978	-.2908	-.2748	-.2749	-.2756	-.2680
-.2599	-.2566	-.2264	-.2240	-.2198	-.2189	-.2138	-.1926
-.1962	-.1901	-.1795	-.1719	-.1664	-.1507	-.1532	-.1533
-.1419	-.1273	-.1218	-.1142	-.1211	-.1116	-.1073	-.1003
-.0946	-.0843	-.0858	-.0800	-.0693	-.0621	-.0620	-.0673
-.0634	-.0494	-.0571	-.0517	-.0531	-.0389	-.0373	-.0362
-.0321	-.0321	-.0278	-.0375	-.0314	-.0328	-.0310	-.0393
-.0198	-.0331	-.0254	-.0342	-.0292	-.0255	-.0301	-.0292
-.0279	-.0317	-.0245	-.0290	-.0269	-.0357	-.0262	-.0298
-.0245	-.0341	-.0274	-.0249	-.0199	-.0253	-.0135	-.0217
-.0056	C.0009	-.0050	0.0016	-.0006	-.0037	0.0023	0.0112
0.0077	C.0076	0.0095	-.0075	-.0075	-.0279	-.0469	-.0682
-.0802	-.1227	-.1378	-.1859	-.2207	-.2441	-.2606	-.2657
-.3128	-.3111	-.3307	-.3325	-.3723	-.3924	-.4076	-.4238
-.4011	-.4142	-.4197	-.4310	-.4286	-.4004	-.3862	-.4157
-.3825	-.3838	-.3664	-.3780	-.3620	-.3564	-.3693	-.3317
-.3333	-.3227	-.3416	-.2821	-.2877	-.2651	-.2568	-.2605
-.2562	-.2318	-.2310	-.2215	-.2199	-.1977	-.1972	-.1865
-.1813	-.1775	-.1766	-.1690	-.1528	-.1628	-.1484	-.1480
-.1283	-.1371	-.1247	-.1172	-.1155	-.1009	-.1057	-.0910
-.0836	-.0813	-.0747	-.0790	-.0724	-.0701	-.0622	-.0470
-.0560	-.0448	-.0510	-.0428	-.0378	-.0291	-.0297	-.0222
-.0212	-.0201	0.0002	-.0103	-.0072	0.0031	0.0041	C.0109
0.0078	C.0095	0.0158	0.0151	C.0234	0.0134	0.0113	0.0078
0.0262	C.0203	0.0154	0.0098	C.0155	0.0150	0.0126	0.0134

AVERAGE UNSTEADY WALL PRESSURE DATA -- FILE - W54509

-.0256	-.0310	-.0240	-.0251	-.0228	-.0182	-.0183	-.0183
-.0132	-.0162	-.0253	-.0219	-.0307	-.0234	-.0231	-.0307
-.0248	-.0278	-.0250	-.0248	-.0242	-.0202	-.0186	-.0122
-.0056	-.0095	0.0019	0.0109	0.0140	0.0149	0.0206	0.0236
0.0310	0.0323	0.0398	0.0424	0.0446	0.0472	0.0505	0.0573
0.0485	0.0487	0.0529	0.0367	0.0369	0.0211	0.0078	-.0236
-.0409	-.0548	-.0633	-.0828	-.0996	-.1144	-.1368	-.1560
-.1637	-.1706	-.1921	-.1915	-.2019	-.2061	-.2029	-.2073
-.1911	-.2016	-.2183	-.2075	-.2029	-.1818	-.1749	-.1812
-.1745	-.1810	-.1716	-.1588	-.1622	-.1571	-.1562	-.1509
-.1548	-.1531	-.1679	-.1678	-.1734	-.1720	-.1654	-.1589
-.1703	-.1684	-.1705	-.1636	-.1602	-.1687	-.1631	-.1639
-.1541	-.1476	-.1369	-.1299	-.1301	-.1192	-.1163	-.1193
-.1015	-.0871	-.0895	-.0836	-.0769	-.0703	-.0810	-.0670
-.0724	-.0630	-.0687	-.0604	-.0649	-.0649	-.0617	-.0699
-.0666	-.0719	-.0655	-.0635	-.0542	-.0525	-.0632	-.0487
-.0484	-.0422	-.0424	-.0378	-.0284	-.0253	-.0247	-.0263
-.0255	-.0272	-.0269	-.0237	-.0188	-.0185	-.0332	-.0217
-.0189	-.0202	-.0151	-.0210	-.0098	-.0015	-.0053	0.0041
0.0071	0.0130	0.0182	0.0254	0.0296	0.0351	0.0473	0.0494
0.0555	0.0504	0.0546	0.0542	0.0610	0.0631	0.0595	0.0585
0.0625	0.0599	0.0528	0.0437	0.0308	0.0138	-.0115	-.0250
-.0553	-.0579	-.0867	-.1031	-.0936	-.1431	-.1530	-.1775
-.1849	-.1911	-.1998	-.2165	-.2030	-.2220	-.2244	-.2274
-.2157	-.2150	-.1952	-.2057	-.1834	-.1876	-.1913	-.1817
-.1742	-.1784	-.1703	-.1570	-.1575	-.1490	-.1632	-.1680
-.1681	-.1580	-.1551	-.1633	-.1644	-.1641	-.1703	-.1566
-.1518	-.1506	-.1560	-.1557	-.1503	-.1436	-.1373	-.1405
-.1308	-.1196	-.1333	-.1116	-.1032	-.0950	-.0881	-.0761
-.0763	-.0669	-.0605	-.0508	-.0469	-.0482	-.0507	-.0407
-.0389	-.0338	-.0441	-.0413	-.0342	-.0473	-.0368	-.0328
-.0356	-.0426	-.0416	-.0422	-.0370	-.0322	-.0299	-.0222

AVERAGE UNSTEADY WALL PRESSURE DATA -- FILE - W5451C

-.0607	-.0551	-.0595	-.0522	-.0415	-.0414	-.0332	-.0273
-.0096	-.0158	-.0112	0.0052	C.0118	0.0128	0.0170	0.0187
0.0271	C.0348	0.0291	0.0348	C.0387	0.0318	0.0433	0.0360
0.0414	C.0298	0.0307	0.0348	C.0331	0.0292	0.0293	0.0275
0.0403	C.0429	0.0465	0.0422	C.0523	0.0546	0.0545	0.0525
0.0543	C.0648	0.0690	0.0741	C.0755	0.0793	0.0800	0.0760
0.0750	C.0832	0.0769	0.0661	C.0771	0.0769	0.0723	0.0710
0.0752	C.0701	0.0635	0.0641	C.0623	0.0620	0.0544	0.0635
0.0496	C.0482	0.0402	0.0274	C.0142	0.0019	-.0196	-.0473
-.0610	-.0757	-.0838	-.0925	-.1157	-.1269	-.1314	-.1331
-.1501	-.1505	-.1461	-.1575	-.1548	-.1559	-.1619	-.1385
-.1488	-.1354	-.1335	-.1246	-.1103	-.1099	-.1218	-.1002
-.1085	-.0929	-.0888	-.0879	-.0961	-.0978	-.1016	-.1104
-.0968	-.0987	-.1035	-.0990	-.1017	-.1005	-.0955	-.0950
-.0845	-.0972	-.0801	-.0862	-.0809	-.0816	-.0770	-.0789
-.0684	-.0772	-.0698	-.0707	-.0634	-.0602	-.0546	-.0515
-.0489	-.0504	-.0405	-.0378	-.0333	-.0285	-.0229	-.0227
-.0093	-.0069	0.0050	C.0039	C.0216	0.0195	0.0176	0.0315
0.0322	C.0354	0.0418	0.0485	C.0445	0.0405	0.0535	0.0453
0.0488	C.0484	0.0403	0.0439	C.0482	0.0441	0.0435	0.0456
0.0449	C.0487	0.0458	0.0532	C.0525	0.0563	0.0552	0.0589
0.0581	C.0682	0.0708	0.0706	C.0739	0.0732	0.0763	0.0795
0.0782	C.0826	0.0892	0.0872	C.0763	0.0711	0.0842	0.0769
0.0683	C.0703	0.0622	0.0568	C.0636	0.0606	0.0551	0.0587
0.0525	C.0486	0.0358	0.0328	C.0251	-.0113	-.0230	-.0412
-.0503	-.0622	-.0810	-.0919	-.0991	-.1126	-.1286	-.1258
-.1378	-.1453	-.1413	-.1459	-.1408	-.1392	-.1330	-.1378
-.1311	-.1226	-.1118	-.0979	-.0941	-.0888	-.0918	-.0876
-.0844	-.0805	-.0821	-.0862	-.0637	-.0839	-.0904	-.0799
-.0849	-.0867	-.0828	-.0935	-.0846	-.0845	-.0760	-.0735
-.0731	-.0633	-.0685	-.0624	-.0595	-.0584	-.0400	-.0450
-.0445	-.0445	-.0438	-.0373	-.0271	-.0310	-.0370	-.0346

AVERAGE UNSTEADY WALL PRESSURE DATA -- FILE - W54511

-.0241	-.0164	-.0053	0.0055	C.0083	0.0168	0.0182	C.0324
0.0363	C.0437	0.0416	0.0554	C.0502	0.0463	0.0422	0.0543
0.0421	C.0473	0.0410	0.0558	C.0537	0.0495	0.0459	C.0595
0.0505	C.0533	0.0522	0.055C	C.0568	0.0550	0.0591	C.0639
0.0595	C.0564	0.0637	0.0568	C.0562	0.0559	0.0538	0.0565
0.0562	C.0553	0.0590	0.0538	C.06C2	0.0527	0.0526	0.0493
0.0553	C.0578	0.0413	0.0466	C.0438	0.0499	0.0414	0.0482
0.0325	C.0390	0.0444	0.0341	C.04C5	0.0407	0.0407	0.0457
0.0448	C.0514	0.0506	0.0578	C.05C9	0.0545	0.0529	C.06C7
0.0648	C.0624	0.06C3	0.0572	C.0596	C.0605	0.0591	0.0616
0.0545	C.0519	0.0505	0.0543	C.0517	0.0467	0.0419	C.0394
0.0352	C.0366	0.0412	C.04CC	C.04C4	0.0386	0.0380	C.0429
0.0411	C.0431	0.0417	0.0431	C.0420	0.0454	0.0399	C.04C9
0.0373	C.0411	0.0425	0.042C	C.0352	0.0389	0.0292	0.0313
0.0178	C.0102	-.0129	-.0351	-.0422	-.0417	-.0480	-.0551
-.0557	-.0579	-.0473	-.0519	-.0481	-.0375	-.0274	-.0254
-.0252	-.0196	-.0014	0.0141	C.0125	0.0253	0.0381	C.0384
0.0511	C.0521	0.0585	0.0612	C.0660	0.0569	0.0630	0.0595
0.0650	C.0652	0.0553	0.0528	C.0617	0.0609	0.0585	C.0553
0.0605	C.0607	0.0571	0.0586	C.0634	0.0616	0.0603	C.0588
0.0583	C.0636	0.0594	0.0594	C.0608	0.0648	0.0639	0.06C2
0.0643	0.0661	0.0602	0.0616	C.0568	0.0537	0.0627	C.0598
0.0526	C.0548	0.0520	0.0544	C.0520	0.0477	0.0493	0.0455
0.0394	C.0513	0.0449	0.0441	C.0533	0.0509	0.0558	0.0527
0.0590	C.0563	0.0570	0.0556	C.06C7	C.06C8	0.0638	C.0610
0.0664	C.0635	0.0623	0.0685	C.0664	0.0594	0.0567	0.0611
0.0630	C.0541	0.0544	0.0566	C.0507	0.0491	0.0447	0.0393
0.0475	C.0464	0.0420	0.0497	C.0431	0.0517	0.0452	C.0423
0.0506	C.0421	0.0467	0.0451	C.0461	0.0440	0.0394	0.0393
0.0406	C.0346	0.0311	0.0311	C.0307	0.0380	0.0269	C.0132
0.0149	C.0054	-.0172	-.0196	-.0248	-.0357	-.0350	-.0375
-.0380	-.0317	-.0345	-.0241	-.0214	-.0269	-.0148	-.0050

AVERAGE UNSTEADY WALL PRESSURE DATA -- FILE - W54512

0.0439	C.0463	0.0499	0.0542	C.0516	0.0580	0.0644	0.0615
C.0686	C.0673	0.0726	0.0681	C.0705	0.0678	0.0687	C.0704
0.0711	C.0676	0.0772	0.0719	C.0769	0.0755	0.0775	C.0851
0.0801	C.0831	0.0805	0.0846	C.0735	0.0809	0.0815	0.0738
0.0752	C.0748	0.0742	0.0750	C.0644	0.0637	0.0665	0.0669
0.0620	C.0575	0.0542	0.0563	C.0570	C.0532	0.0652	C.0599
0.0643	C.0658	0.0585	0.0666	C.0590	0.0665	0.0681	0.0715
0.0702	C.0718	0.0657	0.0630	C.0597	0.0576	0.0582	C.0577
0.0532	C.0603	0.0426	0.0529	C.0493	0.0465	0.0502	0.0519
0.0481	C.0494	0.0508	0.0519	C.0522	0.0574	0.0636	0.0587
0.0645	0.0590	0.0663	0.0684	C.0693	0.0727	0.0654	C.0659
0.0636	C.0619	0.0604	0.0520	C.0466	0.0502	0.0366	0.0263
0.0283	C.0210	0.0108	0.0042	C.0035	0.0031	0.0019	-.0012
0.0066	C.0035	0.0049	0.0138	C.0083	0.0167	0.0183	C.0164
0.0136	C.0192	0.0195	0.0248	C.0199	0.0251	0.0310	0.0276
0.0329	C.0245	0.0400	0.0389	C.0438	0.0410	0.0373	C.0414
0.0420	C.0527	0.0550	C.0593	C.0599	0.0643	0.0565	C.0698
0.0613	C.0659	0.0647	0.0637	C.0729	0.0800	0.0637	C.0731
0.0759	C.0699	0.0745	0.0705	C.0764	0.0799	0.0751	C.0780
0.0742	C.0835	0.0832	0.0826	C.0813	0.0812	0.0808	0.0777
0.0812	C.0742	0.0701	0.0728	C.0704	0.0655	0.0641	0.0651
0.0593	C.0618	0.0585	0.0594	C.0515	0.0589	0.0611	0.0584
0.0562	C.0663	0.0538	0.0577	C.0556	0.0590	0.0551	0.0593
0.0551	C.0592	0.0607	0.0649	C.0591	0.0606	0.0579	C.0580
0.0498	C.0560	0.0545	0.0513	C.0531	0.0523	0.0518	0.0457
0.0569	C.0501	0.0468	0.0555	C.0585	0.0588	0.0565	0.0555
0.0605	C.0609	0.0591	0.0616	C.0618	0.0596	0.0619	C.0556
0.0543	C.0546	0.0464	0.0491	C.0501	0.0420	0.0450	0.0284
0.0293	C.0240	0.0084	0.0014	C.0007	0.0082	0.0	0.0049
0.0078	C.0036	0.0172	0.0124	C.0144	C.0144	0.0193	0.0166
0.0203	C.0289	0.0230	0.0211	C.0258	0.0259	0.0340	0.0378
0.0335	C.0340	0.0266	0.0492	C.0427	0.0431	0.0426	0.0446

ARRAY OF PRESSURES -- FILE - W54501

359.47	358.09	360.05	358.69	358.16	360.21	359.55	359.73
359.65	359.40	357.38	358.69	358.64	357.51	357.66	357.18
356.60	357.71	357.28	354.96	356.22	356.12	356.00	355.75
355.85	357.06	354.66	355.27	353.07	353.55	354.61	353.70
353.15	352.87	352.49	353.70	351.56	352.07	353.00	352.85
351.84	352.67	352.12	352.27	351.23	350.98	350.18	349.37
350.35	349.52	349.50	351.06	350.68	349.02	349.09	348.26
348.44	324.32	347.35	347.63	348.26	347.56	349.24	348.24
347.25	347.03	347.38	347.18	347.33	345.56	348.89	345.44
346.75	344.35	348.92	349.57	345.67	348.03	349.24	345.31
349.24	349.17	351.18	348.51	351.18	353.23	352.97	355.85
352.67	351.46	352.77	353.00	353.63	355.09	354.89	354.08
354.66	355.64	356.25	354.69	356.30	355.42	355.14	354.43
354.13	353.40	353.80	356.50	355.47	354.74	354.51	354.26
353.30	355.64	355.24	355.85	354.03	355.95	356.53	356.70
358.04	357.74	358.95	357.86	357.84	356.02	358.06	357.48
358.04	360.51	356.83	358.39	359.78	360.79	359.78	357.48
359.98	360.94	360.63	359.00	358.69	358.39	358.74	358.84
358.19	357.96	356.58	355.52	357.89	355.67	356.22	356.00
356.75	355.42	355.92	354.94	354.91	356.17	355.24	354.99
353.23	355.09	354.81	353.83	353.78	353.88	353.09	352.85
351.94	354.06	353.68	353.45	353.12	353.98	352.19	353.10
352.77	352.07	352.62	352.47	352.22	350.65	349.85	351.79
350.98	350.55	349.75	349.92	350.48	348.69	348.19	348.66
349.60	349.39	349.12	350.53	348.54	350.71	350.18	350.30
351.36	349.80	348.44	350.88	349.34	350.18	352.39	354.23
353.73	353.63	355.09	351.99	353.23	356.22	355.24	355.32
353.55	358.87	356.25	354.86	356.05	358.16	355.67	356.30
356.68	356.63	356.27	358.77	357.08	356.93	354.71	358.47
355.37	355.59	356.17	356.50	356.00	354.94	354.79	356.22
354.59	356.30	356.25	355.85	355.32	357.26	357.38	357.43
359.45	355.47	358.32	356.75	358.47	359.35	358.74	360.05

ARRAY CF PRESSURES -- FILE - W54502

361.06	359.45	361.41	359.15	360.55	358.11	358.47	356.38
356.50	355.07	356.23	357.03	354.67	356.18	353.71	350.49
354.47	354.72	353.79	351.72	351.24	351.37	350.46	351.19
348.80	348.83	348.10	347.32	347.32	345.99	344.75	345.08
344.25	344.58	343.34	341.93	342.29	341.33	340.68	340.12
340.60	339.67	339.42	338.66	337.43	336.95	336.65	337.20
337.86	336.63	336.80	335.24	334.91	334.99	335.19	332.73
334.81	335.64	332.50	333.45	337.88	337.53	338.14	337.98
335.47	333.20	340.48	338.51	341.56	341.48	345.51	338.86
345.26	347.80	342.56	349.61	346.59	348.63	346.54	351.24
349.23	351.87	349.86	356.13	349.53	352.30	350.92	353.08
353.76	351.95	349.94	354.04	356.08	359.60	356.55	359.75
355.22	362.74	363.05	361.39	362.17	359.60	361.01	363.32
362.92	359.85	363.52	361.56	360.50	360.55	362.32	360.91
360.53	359.80	360.15	361.33	363.20	360.50	361.91	361.11
361.33	362.22	360.91	363.22	362.42	362.37	360.25	358.99
360.18	360.50	358.32	360.35	357.66	357.74	359.32	357.41
357.11	355.72	356.15	356.63	356.20	355.12	355.04	353.64
354.01	353.71	353.03	352.25	352.63	352.02	350.54	349.84
350.11	349.79	349.58	349.23	348.53	349.28	346.41	346.84
346.61	345.68	344.78	344.93	344.58	344.12	344.43	345.16
343.29	343.09	342.16	343.65	342.06	342.16	342.24	341.86
340.85	341.66	342.89	342.06	341.86	340.53	342.59	342.04
340.55	341.15	342.24	342.56	339.97	342.36	344.60	347.04
345.76	342.84	348.28	346.46	347.97	347.90	349.71	351.40
350.09	349.46	351.97	349.73	351.04	350.84	351.67	351.07
350.04	350.19	350.54	353.41	350.92	356.03	355.14	352.45
352.33	355.50	360.15	354.09	355.75	358.54	361.08	357.01
361.59	358.59	360.10	359.35	361.49	363.52	361.08	364.33
363.45	361.86	360.86	360.15	363.42	359.80	360.91	361.79
362.64	362.32	360.81	361.03	361.84	362.19	362.04	361.36
360.96	360.38	362.67	361.39	363.62	361.74	360.66	362.22

ARRAY OF PRESSURES -- FILE - W54503

358.96	359.40	357.10	358.03	353.67	356.12	352.30	352.54
350.63	348.23	349.95	348.43	345.76	344.51	344.33	343.13
340.61	339.85	339.21	338.87	337.45	336.57	334.29	331.89
333.65	331.77	330.64	329.93	329.66	329.10	327.14	325.57
325.74	325.74	323.49	323.80	321.97	322.63	322.06	321.84
321.23	319.93	319.15	319.03	319.42	318.76	319.79	318.59
318.36	317.48	318.05	319.71	320.01	316.72	319.59	317.95
325.84	322.87	327.41	330.12	332.04	326.99	337.03	339.85
337.84	338.75	341.86	336.27	347.67	345.93	349.38	344.53
346.27	348.62	342.03	352.03	349.11	351.54	347.74	353.33
350.75	354.04	352.20	352.44	353.62	352.47	354.04	356.90
356.17	357.17	359.79	355.70	356.49	357.22	358.45	357.91
354.40	359.70	357.71	357.20	361.22	360.99	361.41	361.66
361.56	361.61	363.15	364.89	362.07	362.12	362.64	364.08
363.42	363.59	363.00	363.49	362.37	361.61	362.93	361.41
362.07	363.71	361.56	360.75	360.55	361.14	359.18	360.77
358.91	359.11	358.20	356.27	355.34	354.62	352.22	353.74
350.26	349.75	347.86	347.25	347.10	347.79	345.80	344.09
343.80	340.95	340.59	339.66	339.17	338.60	337.92	336.49
336.15	334.02	334.58	333.55	333.09	331.50	332.48	331.82
331.10	330.98	331.35	329.41	331.37	329.12	330.64	328.53
331.96	329.10	328.75	329.95	330.76	329.10	331.52	331.10
332.94	331.30	332.87	332.50	334.41	333.97	332.18	342.01
334.83	333.11	337.65	336.91	338.19	341.37	336.74	342.01
342.40	337.21	339.19	342.01	341.00	344.51	349.75	346.03
348.08	352.32	349.58	347.05	347.84	349.85	353.87	348.74
354.06	351.51	353.55	352.59	348.38	351.34	355.41	355.34
357.79	357.10	355.60	356.02	355.80	356.41	355.21	357.00
354.92	359.40	359.40	360.06	358.54	360.36	360.33	360.97
361.31	361.22	363.81	363.15	364.35	362.56	363.35	362.02
361.36	363.25	363.44	364.87	363.71	364.42	362.42	363.57
364.33	361.14	364.42	362.64	363.13	361.51	362.49	360.65

ARRAY OF PRESSURES -- FILE - W54504

358.07	354.97	353.36	350.13	348.98	347.50	342.99	343.26
340.96	338.90	338.75	336.80	334.09	331.36	330.93	328.75
328.10	326.47	326.02	324.84	322.11	320.28	320.20	318.17
318.10	316.04	314.67	313.56	312.86	312.49	310.91	310.51
308.85	307.72	307.70	308.30	307.10	305.24	304.42	303.81
304.47	303.89	305.39	302.69	306.92	303.79	302.74	303.06
306.60	305.54	315.04	309.30	310.13	318.48	310.41	325.47
315.59	330.96	343.04	341.16	335.24	341.13	338.85	344.21
341.86	347.50	347.32	349.83	351.86	347.35	351.08	351.43
347.15	350.71	350.23	347.00	349.58	344.99	351.36	350.63
350.68	352.54	357.42	358.00	361.11	361.88	364.79	365.39
362.66	362.84	364.21	368.63	366.90	367.50	363.56	366.85
367.10	366.19	365.19	363.76	368.10	367.15	369.25	368.78
370.03	368.98	370.68	369.48	371.76	370.88	370.63	373.46
371.86	375.22	370.58	371.33	371.63	370.78	369.20	368.53
367.80	367.97	365.74	361.48	360.96	359.78	358.02	360.91
356.55	352.54	351.36	349.03	348.20	344.74	344.87	342.03
340.48	338.40	337.47	336.37	335.99	333.86	332.41	331.28
329.85	329.60	328.20	326.27	326.97	324.49	325.12	324.16
323.09	323.09	321.38	323.26	321.53	319.53	320.88	319.33
318.33	320.43	320.66	318.38	319.50	317.27	320.71	316.85
321.31	318.25	322.79	321.51	323.16	322.28	324.54	327.10
321.38	329.78	336.95	324.04	328.55	327.22	331.23	334.89
338.12	336.12	342.96	340.08	346.07	341.76	345.14	342.49
345.04	341.83	344.74	341.56	345.84	345.49	344.16	345.82
346.12	348.48	346.90	345.74	344.62	347.12	350.58	348.43
351.01	353.04	356.42	358.88	359.75	363.49	365.19	366.82
366.80	366.92	365.19	364.57	365.64	364.39	365.29	366.14
364.06	366.50	364.21	367.07	364.97	367.37	368.20	367.32
367.30	370.05	372.23	372.06	371.73	371.43	370.48	371.03
371.41	369.75	372.51	373.09	371.96	371.58	370.61	371.13
368.37	367.32	367.12	368.05	365.84	364.26	364.29	362.54

ARRAY OF PRESSURES -- FILE - W54505

373.26	362.24	362.79	360.11	356.95	348.99	350.96	348.74
345.78	343.13	339.03	336.99	333.30	330.64	328.90	329.02
328.72	325.23	322.68	320.20	317.50	317.90	316.16	314.44
312.85	313.18	311.61	311.51	309.06	309.59	308.98	308.60
308.55	308.63	308.53	307.34	308.93	308.48	307.97	309.31
309.76	311.00	309.31	309.61	311.99	315.25	312.70	314.49
321.32	315.98	319.42	323.62	323.67	329.00	325.28	338.48
333.83	347.27	344.49	347.63	346.06	352.56	341.06	357.99
362.06	363.20	357.94	361.43	367.27	365.77	368.60	371.46
366.18	372.88	371.66	370.37	370.55	368.86	368.23	368.73
372.45	371.33	368.53	369.21	371.11	372.55	372.14	375.33
375.81	377.17	375.99	375.71	377.20	379.07	377.75	379.20
378.97	384.45	381.82	384.40	388.04	386.27	387.84	384.17
389.05	390.47	390.19	390.95	394.33	392.31	392.82	395.65
392.52	393.30	396.18	394.92	394.33	396.28	390.49	387.81
390.09	387.79	384.12	380.79	379.47	375.53	374.57	368.18
367.24	360.52	360.69	355.56	354.37	352.00	347.17	346.24
344.09	341.56	339.44	337.74	334.86	333.62	333.30	334.86
330.09	328.01	328.01	326.19	326.19	323.79	324.47	322.60
323.39	324.96	323.94	325.76	325.11	326.47	324.53	324.37
325.23	326.32	325.33	327.25	326.93	326.98	327.20	325.81
327.36	330.67	328.85	325.13	332.36	328.67	337.39	334.94
329.38	333.70	335.65	340.09	335.87	341.13	340.22	341.43
347.60	352.23	346.31	349.57	352.68	352.38	351.82	353.64
353.19	353.84	348.13	359.28	355.94	358.32	352.66	358.85
361.86	364.18	361.20	362.84	367.24	366.25	364.28	367.09
367.85	369.46	369.64	370.93	369.34	370.70	372.12	371.59
374.95	374.06	372.57	373.61	379.55	376.97	379.95	380.36
379.04	381.42	384.20	384.50	382.58	384.10	386.22	387.01
386.78	388.19	390.59	389.71	390.37	391.45	391.66	393.93
393.96	395.12	392.62	396.10	392.72	394.81	394.28	392.46
390.37	391.00	391.45	388.75	387.43	384.15	379.27	374.92

ARRAY OF PRESSURES -- FILE - W54506

343.14	342.20	333.51	332.90	328.66	324.41	322.50	321.63
316.71	312.92	309.53	310.72	308.69	303.05	301.78	301.81
299.68	299.01	297.23	295.87	294.58	295.23	293.05	292.31
291.29	289.71	290.23	289.51	288.72	289.90	288.84	290.89
290.30	290.15	292.53	292.06	290.62	292.90	294.58	291.86
296.36	296.91	292.35	301.78	301.69	303.54	302.11	305.87
323.79	306.69	325.35	332.92	328.04	346.95	339.28	349.11
346.38	336.86	350.02	360.74	356.98	352.47	363.11	356.61
367.10	364.85	372.27	364.85	369.97	368.83	368.54	370.17
367.45	363.88	370.71	367.35	369.35	369.90	373.76	368.36
371.21	372.47	371.63	374.90	376.75	377.49	377.97	379.75
382.89	383.01	380.94	382.52	383.09	386.90	386.01	386.75
384.97	389.23	389.72	395.64	395.71	392.59	399.97	401.16
405.09	404.13	406.28	408.11	411.58	413.28	418.85	417.86
418.23	416.95	420.44	413.56	412.32	405.14	397.79	397.39
392.79	386.58	373.09	372.67	367.79	358.24	356.90	346.56
341.43	336.56	335.12	330.45	330.27	326.81	322.60	321.26
320.30	319.01	317.87	316.04	314.98	314.21	312.90	312.25
312.38	311.21	309.85	311.36	310.50	312.08	310.05	311.12
311.39	311.46	312.50	307.63	308.34	310.05	310.92	310.47
310.00	313.61	310.79	310.37	312.45	315.25	314.88	315.59
318.47	318.37	329.11	323.42	329.95	316.61	334.38	334.33
330.22	341.19	338.12	340.77	339.92	340.17	346.11	342.45
344.28	344.40	345.27	345.59	351.95	346.04	340.59	345.42
354.72	348.86	353.59	360.62	352.70	357.97	364.33	363.66
363.66	362.94	365.74	370.59	369.18	369.28	372.72	372.17
369.72	372.03	374.52	378.11	374.33	377.57	375.86	377.47
379.13	382.07	379.92	380.64	381.36	384.67	380.81	384.42
387.10	388.56	388.73	390.49	389.89	392.05	394.65	395.14
400.24	401.60	404.55	407.94	408.98	411.33	413.88	415.91
417.19	418.16	421.72	417.19	419.74	412.57	413.09	410.54
403.80	399.97	388.68	383.19	378.34	375.61	375.27	363.16

ARRAY OF PRESSURES -- FILE - W54507

387.95	378.41	376.93	371.38	359.21	359.61	350.24	348.31
340.00	334.01	322.66	323.41	315.73	309.01	303.63	301.10
301.55	298.06	293.82	291.36	289.00	286.52	286.19	286.11
286.04	286.57	287.60	289.45	286.52	284.68	287.47	293.32
290.98	298.19	295.78	296.56	298.64	306.17	299.92	304.51
315.58	310.29	315.96	318.32	339.98	321.15	349.74	333.83
340.53	341.18	348.39	346.96	356.39	356.24	353.46	359.38
365.28	357.75	362.49	362.37	367.46	363.52	367.99	364.15
370.43	366.84	362.09	375.34	368.67	374.54	375.12	374.99
377.83	374.82	374.89	374.69	374.54	378.08	380.47	377.40
378.48	379.76	384.63	380.54	382.15	384.78	383.23	384.46
386.99	385.39	387.57	388.70	385.51	390.40	392.44	394.42
397.28	398.99	400.29	404.76	403.16	408.00	405.67	409.61
407.05	412.67	411.92	413.67	415.81	413.17	415.53	414.65
415.78	413.90	411.97	408.15	406.17	405.34	403.73	403.83
400.90	402.28	397.03	394.04	390.46	388.32	380.79	374.99
368.87	368.97	364.48	356.60	351.17	346.30	340.81	336.77
333.80	330.82	322.33	320.85	314.65	311.31	308.43	305.47
303.68	302.40	302.40	300.87	302.38	304.19	303.16	305.14
309.36	307.30	311.54	308.38	310.89	311.99	312.07	324.67
319.17	322.79	324.74	331.29	325.95	324.74	331.67	325.95
328.08	333.25	334.43	338.27	337.59	335.91	338.10	341.11
337.12	341.31	332.52	350.22	349.09	343.92	346.23	352.43
344.12	348.26	356.34	355.32	358.65	361.72	361.62	361.11
365.08	362.72	361.62	360.66	366.58	366.13	372.81	370.40
373.26	371.18	369.02	378.61	379.41	380.34	376.30	379.19
381.02	378.48	382.30	382.25	381.57	383.28	385.51	384.88
387.07	387.39	384.53	389.25	390.35	392.39	393.67	395.93
394.57	397.18	397.21	400.29	400.87	401.95	407.00	405.29
411.41	410.86	413.80	415.13	414.30	417.61	418.19	418.72
421.18	421.55	422.48	420.47	420.45	418.32	417.14	420.02
413.87	417.59	416.46	413.25	409.18	410.33	403.43	400.39

ARRAY OF PRESSURES -- FILE - W54508

405.01	403.81	403.91	404.71	402.71	403.06	404.18	404.63
406.10	407.48	406.35	405.73	407.65	408.13	407.70	404.61
407.50	403.58	401.14	399.34	396.42	393.85	388.43	381.54
379.25	369.93	359.52	350.01	344.10	336.33	326.25	323.43
318.19	312.15	312.50	312.47	313.27	309.25	308.20	295.32
310.65	287.93	293.37	314.57	315.97	312.79	312.02	321.31
317.16	312.05	321.66	322.28	315.59	323.23	321.91	321.98
327.10	326.77	328.57	330.32	334.31	334.29	334.11	336.01
338.03	338.86	346.39	346.99	348.04	348.27	349.54	354.83
353.93	355.46	358.10	360.00	361.37	365.29	364.67	364.64
367.49	371.13	372.51	374.40	372.68	375.05	376.12	377.87
379.30	381.87	381.49	382.94	385.61	387.41	387.43	386.11
387.08	390.58	388.66	390.00	389.65	393.20	393.60	393.87
394.90	394.90	395.97	393.55	395.07	394.72	395.17	393.10
397.97	394.65	396.57	394.37	395.62	396.54	395.40	395.62
395.95	395.00	396.79	395.67	396.19	394.00	396.37	395.47
396.79	394.40	396.07	396.69	397.94	396.59	399.54	397.49
401.51	403.13	401.66	403.31	402.76	401.99	403.48	405.71
404.83	404.81	405.28	401.04	401.04	395.95	391.20	385.89
382.89	372.28	368.51	356.50	347.82	341.98	337.86	336.58
324.83	325.25	320.36	319.91	309.97	304.96	301.16	297.12
302.78	299.51	298.14	295.32	295.92	302.96	306.50	299.14
307.43	307.10	311.45	308.55	312.55	313.94	310.72	320.11
319.71	322.36	317.64	332.49	331.09	336.73	338.81	337.88
338.96	345.05	345.25	347.62	348.02	353.56	353.68	356.35
357.65	358.60	358.83	360.72	364.77	362.27	365.87	365.97
370.88	368.69	371.78	373.65	374.08	377.72	376.52	380.19
382.04	382.61	384.26	383.19	384.84	385.41	387.38	391.18
388.93	391.73	390.18	392.23	393.47	395.65	395.50	397.37
397.62	397.89	402.96	400.34	401.11	403.68	403.93	405.63
404.86	405.28	406.85	406.68	408.75	406.25	405.73	404.86
409.45	407.98	406.75	405.36	406.78	406.65	406.05	406.25

ARRAY OF PRESSURES -- FILE - W54509

402.31	400.95	402.71	402.43	403.01	404.17	404.14	404.14
405.42	404.67	402.38	403.24	401.03	402.86	402.94	401.03
402.51	401.76	402.46	402.51	402.66	403.66	404.07	405.67
407.33	406.35	409.21	411.47	412.25	412.47	413.91	414.66
416.52	416.84	418.72	419.38	419.93	420.58	421.41	423.12
420.91	420.96	422.01	417.95	418.00	414.03	410.69	402.81
398.47	394.98	392.85	387.95	383.73	380.02	374.40	369.58
367.65	365.91	360.52	360.67	358.06	357.00	357.81	356.70
360.77	358.13	353.94	356.65	357.81	363.10	364.83	363.25
364.94	363.30	365.66	368.88	368.02	369.30	369.53	370.86
369.88	370.31	366.59	366.62	365.21	365.56	367.22	368.85
365.99	366.47	365.94	367.67	368.52	366.39	367.80	367.60
370.06	371.69	374.37	376.13	376.08	378.82	379.54	378.79
383.26	386.87	386.27	387.75	389.43	391.09	388.40	391.92
390.56	392.92	391.49	393.57	392.44	392.44	393.25	391.19
392.02	390.69	392.29	392.80	395.13	395.56	392.87	396.51
396.59	398.14	398.09	399.25	401.61	402.38	402.53	402.13
402.33	401.91	401.98	402.79	404.02	404.09	400.40	403.29
403.99	403.66	404.94	403.46	406.27	408.36	407.40	409.76
410.52	412.00	413.30	415.11	416.16	417.54	420.61	421.13
422.67	421.38	422.44	422.34	424.05	424.57	423.67	423.42
424.42	423.77	421.99	419.70	416.47	412.20	405.85	402.46
394.85	394.20	386.97	382.86	385.24	372.82	370.33	364.18
362.32	360.77	358.58	354.39	357.78	353.01	352.41	351.66
354.59	354.77	359.74	357.10	362.70	361.65	360.72	363.13
365.01	363.96	365.99	369.33	369.20	371.34	367.77	366.57
366.54	369.08	369.80	367.75	367.47	367.55	365.99	369.43
370.63	370.93	369.58	369.65	371.01	372.69	374.27	373.47
375.90	378.71	375.28	380.72	382.83	384.89	386.62	389.63
389.58	391.94	393.55	395.98	396.96	396.64	396.01	398.52
398.97	400.25	397.67	398.37	400.15	396.86	399.50	400.50
399.80	398.04	398.29	398.14	399.45	400.65	401.23	403.16

ARRAY OF PRESSURES -- FILE - W54510

390.46	391.87	390.76	392.60	395.29	395.32	397.38	398.87
403.32	401.76	402.92	407.05	408.71	408.96	410.02	410.45
412.56	414.50	413.06	414.50	415.48	413.74	416.64	414.80
416.16	413.24	413.47	414.50	414.07	413.09	413.11	412.66
415.88	416.54	417.44	416.36	418.91	419.48	419.46	418.96
419.41	422.05	423.11	424.39	424.75	425.70	425.88	424.87
424.62	426.68	425.10	422.38	425.15	425.10	423.94	423.61
424.67	423.39	421.72	421.88	421.42	421.35	419.43	421.72
418.23	417.87	415.86	412.64	409.31	406.22	400.80	393.83
390.38	386.68	384.64	382.45	376.61	373.79	372.66	372.23
367.95	367.85	368.96	366.05	366.77	366.49	364.98	370.87
368.28	371.65	372.13	374.37	377.97	378.07	375.08	380.51
378.42	382.35	383.38	383.61	381.55	381.12	380.16	377.95
381.37	380.89	379.68	380.82	380.14	380.44	381.70	381.82
384.47	381.27	385.57	384.04	385.37	385.20	386.35	385.88
388.52	386.30	388.17	387.94	389.78	390.58	391.99	392.77
393.43	393.05	395.54	396.22	397.36	398.56	399.97	400.02
403.40	404.00	407.00	406.72	411.18	410.65	410.17	413.67
413.84	414.65	416.26	417.95	416.94	415.93	419.21	417.14
418.02	417.92	415.88	416.79	417.87	416.84	416.69	417.22
417.04	418.00	417.27	419.13	418.96	419.91	419.64	420.57
420.37	422.91	423.56	423.51	424.34	424.17	424.95	425.75
425.43	426.53	428.19	427.69	424.95	423.64	426.94	425.10
422.93	423.44	421.40	420.04	421.75	420.99	419.61	420.52
418.96	417.97	414.75	414.00	412.06	402.89	399.95	395.37
393.08	390.08	385.35	382.60	380.79	377.39	373.36	374.07
371.05	369.16	370.17	369.01	370.29	370.70	372.26	371.05
372.73	374.87	377.59	381.09	382.05	383.38	382.63	383.69
384.49	385.47	385.07	384.04	389.70	384.62	382.98	385.62
384.36	383.91	384.89	382.20	384.44	384.47	386.61	387.23
387.34	389.80	388.49	390.03	390.76	391.04	395.67	394.41
394.54	394.54	394.71	396.35	398.92	397.93	396.42	397.03

ARRAY OF PRESSURES -- FILE - W54511

393.59	395.25	397.63	399.95	400.55	402.38	402.68	405.73
406.56	408.15	407.70	410.67	409.55	408.71	407.83	410.43
407.81	408.93	407.57	410.75	410.30	409.40	408.63	411.55
409.61	410.22	409.98	410.58	410.97	410.58	411.46	412.49
411.55	410.88	412.45	410.97	410.84	410.77	410.32	410.90
410.84	410.65	411.44	410.32	411.70	410.09	410.07	409.36
410.65	411.18	407.64	408.78	408.18	409.49	407.66	409.12
405.75	407.14	408.30	406.09	407.47	407.51	407.51	408.58
408.39	409.81	409.64	411.18	409.70	410.47	410.13	411.80
412.69	412.17	411.72	411.05	411.57	411.76	411.46	412.00
410.47	409.91	409.61	410.43	409.87	408.80	407.77	407.23
406.33	406.63	407.62	407.36	407.45	407.06	406.93	407.98
407.60	408.03	407.72	408.03	407.79	408.52	407.34	407.55
406.78	407.60	407.90	407.79	406.33	407.12	405.04	405.49
402.59	400.96	396.00	391.23	389.71	389.81	388.46	386.94
386.81	386.34	388.61	387.62	388.44	390.72	392.89	393.31
393.36	394.56	398.47	401.80	401.45	404.20	406.95	407.02
409.74	409.96	411.33	411.91	412.94	410.99	412.30	411.55
412.73	412.77	410.65	410.11	412.02	411.85	411.33	410.65
411.76	411.80	411.03	411.35	412.38	412.00	411.72	411.40
411.29	412.43	411.53	411.53	411.83	412.69	412.49	411.70
412.58	412.96	411.70	412.00	410.97	410.30	412.23	411.61
410.07	410.54	409.94	410.45	409.94	409.01	409.36	408.54
407.23	409.79	408.41	408.24	410.22	409.70	410.75	410.09
411.44	410.86	411.01	410.71	411.80	411.83	412.47	411.87
413.03	412.41	412.15	413.48	413.03	411.53	410.95	411.89
412.30	410.39	410.45	410.92	409.66	409.31	408.37	407.21
408.97	408.73	407.79	409.44	408.03	409.87	408.48	407.85
409.64	407.81	408.80	408.45	408.67	408.22	407.23	407.21
407.49	406.20	405.45	405.45	405.36	406.93	404.55	401.60
401.97	399.93	395.08	394.56	393.44	391.10	391.25	390.72
390.61	391.96	391.36	393.59	394.17	392.99	395.59	397.70

ARRAY OF PRESSURES -- FILE - W54512

417.51	418.11	419.02	420.11	419.45	421.07	422.68	421.95
423.74	423.42	424.75	423.62	424.22	423.54	423.77	424.20
424.37	423.49	425.92	424.58	425.84	425.49	425.99	427.91
426.65	427.41	426.75	427.78	424.98	426.85	427.00	425.06
425.41	425.31	425.16	425.36	422.68	422.51	423.21	423.31
422.08	420.94	420.11	420.64	420.81	419.86	422.89	421.55
422.66	423.04	421.19	423.24	421.32	423.21	423.62	424.48
424.15	424.55	423.01	422.33	421.50	420.97	421.12	420.99
419.86	421.65	417.18	419.78	418.87	418.16	419.10	419.53
418.57	418.90	419.25	419.53	419.60	420.92	422.48	421.24
422.71	421.32	423.16	423.69	423.92	424.78	422.94	423.06
422.48	422.05	421.67	419.55	418.19	419.10	415.66	413.06
413.57	411.72	409.15	407.48	407.31	407.21	406.90	406.12
408.09	407.31	407.66	409.91	408.52	410.64	411.04	410.56
409.86	411.27	411.35	412.68	411.45	412.76	414.25	413.39
414.73	412.61	416.52	416.24	417.48	416.77	415.84	416.88
417.03	419.73	420.31	421.40	421.55	422.66	420.69	424.05
421.90	423.06	422.76	422.51	424.83	426.62	422.51	424.88
425.59	424.07	425.23	424.22	425.71	426.60	425.39	426.12
425.16	427.51	427.43	427.28	426.95	426.93	426.82	426.04
426.93	425.16	424.12	424.80	424.20	422.96	422.61	422.86
421.40	422.03	421.19	421.42	419.43	421.29	421.85	421.17
420.61	423.16	420.01	420.99	420.46	421.32	420.33	421.40
420.33	421.37	421.75	422.81	421.34	421.72	421.04	421.07
419.00	420.56	420.18	419.38	419.83	419.63	419.50	417.96
420.79	419.07	418.24	420.44	421.19	421.27	420.69	420.44
421.70	421.80	421.34	421.98	422.03	421.47	422.05	420.46
420.13	420.21	418.14	418.82	419.07	417.03	417.78	413.59
413.82	412.48	408.54	406.78	406.60	408.49	406.42	407.66
408.39	407.33	410.77	409.55	410.06	410.06	411.30	410.61
411.55	413.72	412.23	411.75	412.94	412.96	415.01	415.97
414.88	415.01	413.14	418.85	417.20	417.30	417.18	417.68

ARRAY OF PRESSURES EVENED -- FILE - W54501

359.63	358.22	360.19	358.74	358.40	360.00	359.44	359.39
359.34	358.97	357.27	358.53	358.25	357.38	357.27	356.51
356.39	357.41	356.93	354.64	355.73	355.65	355.44	355.29
355.14	356.23	354.01	354.47	352.50	352.80	353.63	352.84
352.26	352.04	351.58	352.53	350.63	350.99	351.77	351.57
350.72	351.37	350.85	350.91	349.85	349.58	348.82	348.15
349.10	348.23	348.23	349.48	349.10	347.61	347.70	346.71
347.07	325.45	345.87	346.21	347.22	346.55	348.13	347.21
346.07	345.64	346.69	346.31	346.75	345.16	348.55	344.78
346.60	344.70	348.28	349.57	345.76	348.09	348.97	345.91
349.24	349.44	351.05	349.27	351.02	353.13	352.77	355.57
352.78	351.51	352.49	353.10	353.87	355.54	355.05	354.65
354.72	356.35	356.93	355.36	356.89	355.84	355.73	355.32
355.01	354.05	354.78	357.01	355.97	355.32	355.29	354.92
354.02	356.06	355.73	356.39	354.95	356.40	357.06	357.14
358.37	358.18	359.14	358.40	358.29	356.66	358.28	357.63
358.25	360.51	356.98	358.59	359.57	360.48	359.73	357.48
359.69	360.41	360.19	358.76	358.44	358.06	358.37	358.32
357.77	357.54	356.22	355.19	357.36	355.30	355.66	355.38
356.09	354.85	355.29	354.37	354.27	355.48	354.36	354.17
352.56	354.15	353.81	352.94	352.86	352.90	354.02	352.08
351.08	352.96	352.53	352.47	352.02	352.80	351.20	351.98
351.58	351.02	351.65	351.43	351.18	349.64	349.12	350.81
349.94	349.61	349.00	349.19	349.43	348.06	347.83	348.50
349.21	348.74	349.03	350.12	348.48	350.42	350.13	350.41
351.23	349.76	348.79	350.77	349.51	350.24	352.32	353.92
353.36	353.28	354.63	352.13	352.99	356.20	355.23	355.03
353.43	358.53	356.64	354.79	356.02	358.20	356.21	356.37
357.17	356.82	356.66	358.83	357.52	357.59	355.35	359.05
356.18	356.22	356.64	356.87	356.74	355.42	355.40	356.78
355.39	356.90	356.70	356.36	355.97	357.75	357.85	357.83
359.60	355.96	358.75	357.22	358.98	359.59	358.93	360.27

ARRAY OF PRESSURES EVENED -- FILE - W54502

360.23	358.74	360.70	358.91	359.31	359.20	359.03	358.12
358.14	357.32	356.83	357.90	356.73	356.87	355.76	353.97
355.58	356.27	355.60	353.41	353.83	353.84	353.34	353.56
352.47	353.11	351.51	351.45	350.31	349.92	349.88	349.56
348.88	348.89	348.10	348.05	347.11	346.91	347.08	346.74
346.44	346.43	346.02	345.74	344.61	344.25	343.68	343.53
344.35	343.33	343.40	343.47	343.11	342.28	342.42	340.80
341.90	329.76	340.22	340.83	343.28	342.74	343.91	343.31
341.60	340.39	344.06	343.02	344.56	343.60	347.27	342.28
346.03	346.01	345.87	349.59	346.11	348.32	347.95	348.16
349.24	350.47	350.55	352.17	350.39	352.78	351.99	354.52
353.19	351.70	351.41	353.50	354.80	357.25	355.69	356.80
354.93	359.05	359.51	357.90	359.11	357.42	357.96	358.70
358.35	356.50	358.47	358.93	357.89	357.53	358.26	357.45
356.77	357.64	357.60	358.48	358.43	358.13	359.11	358.82
359.62	359.89	359.89	360.43	360.03	359.07	359.11	358.21
359.06	360.51	357.54	359.33	358.76	359.32	359.56	357.45
358.60	358.43	358.48	357.86	357.50	356.82	356.97	356.34
356.18	355.92	354.87	353.95	355.36	353.92	353.50	353.04
353.57	352.71	352.88	352.20	351.85	352.87	351.00	351.08
350.05	350.57	350.00	349.56	349.36	349.20	349.97	349.16
347.79	348.79	348.15	348.74	347.81	348.31	347.41	347.70
347.05	347.07	347.95	347.47	347.25	345.79	346.36	347.11
345.98	346.04	346.14	346.39	345.44	345.65	346.47	347.89
347.75	346.25	348.71	348.58	348.27	349.36	349.95	350.83
350.75	349.63	350.13	350.33	350.16	350.50	352.05	352.71
351.96	351.98	352.91	352.67	352.12	356.13	355.19	353.94
352.96	357.25	358.12	354.49	355.90	358.35	358.27	356.64
359.03	357.57	358.11	359.05	359.20	360.09	357.77	361.28
359.25	358.60	358.42	358.25	359.56	357.27	357.72	358.89
358.45	359.19	358.44	358.34	358.45	359.62	359.62	359.32
360.17	357.82	360.40	358.98	360.94	360.50	359.66	361.09

ARRAY OF PRESSURES EVENED -- FILE - W54503

360.84	359.26	361.22	359.08	360.22	358.41	358.62	356.85
356.94	355.68	356.39	357.26	355.22	356.36	354.26	351.43
354.76	355.14	354.28	352.18	351.94	352.04	351.24	351.83
349.79	349.98	349.02	348.43	348.12	347.04	346.13	346.29
345.50	345.74	344.62	343.58	343.59	342.85	342.40	341.90
342.17	341.49	341.20	340.57	339.36	338.92	338.54	338.91
339.61	338.43	338.58	337.46	337.12	336.95	337.14	334.90
336.72	334.06	334.58	335.44	339.34	338.93	339.69	339.42
337.12	335.14	341.44	339.73	342.36	342.05	345.98	339.78
345.46	347.32	343.45	349.60	346.46	348.54	346.92	350.41
349.23	351.49	350.05	355.06	349.76	352.43	351.21	353.47
353.61	351.88	350.33	353.89	355.73	358.97	356.32	358.96
355.14	361.75	362.09	360.45	361.34	359.01	360.19	362.08
361.69	358.95	362.16	360.85	359.80	359.74	361.22	359.98
359.52	359.22	359.46	360.57	361.91	359.87	361.16	360.49
360.87	361.59	360.63	362.47	361.78	361.48	359.95	358.78
359.88	360.50	358.11	360.08	357.96	358.16	359.39	357.42
357.51	356.45	356.78	356.96	356.55	355.58	355.56	354.36
354.60	354.31	353.53	352.71	353.36	352.53	351.34	350.70
351.04	350.57	350.47	350.03	349.42	350.25	347.65	347.98
347.54	347.00	346.18	346.18	345.86	345.49	345.92	346.23
344.50	344.63	343.77	345.02	343.61	343.82	343.63	343.43
342.52	343.11	344.25	343.52	343.31	341.94	343.60	343.40
342.01	342.47	343.29	343.59	341.44	343.25	345.10	347.27
346.30	343.76	348.39	347.03	348.05	348.29	349.77	351.24
350.27	349.51	351.48	349.90	350.81	350.75	351.77	351.51
350.55	350.67	351.18	353.21	351.24	356.05	355.16	352.85
352.50	355.97	359.61	354.20	355.79	358.49	360.33	356.91
360.90	358.32	359.57	359.27	360.87	362.60	360.19	363.51
362.32	360.99	360.20	359.64	362.38	359.12	360.05	361.01
361.52	361.47	360.17	360.31	360.93	361.50	361.39	360.81
360.75	359.69	362.06	360.74	362.90	361.40	360.39	361.91

ARRAY OF PRESSURES EVENED -- FILE - W54504

360.25	359.43	359.74	358.71	357.89	357.34	356.08	354.89
354.23	352.42	353.80	353.70	351.22	351.66	350.08	347.64
349.10	348.96	348.15	346.75	345.90	345.64	344.20	343.72
342.94	342.22	341.34	340.59	340.48	339.45	337.93	337.53
337.08	337.28	335.66	334.92	334.42	334.09	333.47	333.05
333.10	332.03	331.57	331.06	330.46	329.91	330.12	330.00
330.31	329.22	329.54	329.23	329.14	327.92	329.15	327.00
331.34	330.70	330.53	332.17	335.62	333.45	337.71	338.71
336.39	335.35	341.01	337.65	343.92	343.20	347.01	341.06
345.65	348.12	342.36	350.55	347.57	349.75	347.00	352.05
349.82	352.71	350.77	354.70	351.12	352.37	352.12	354.56
354.69	353.97	353.75	354.68	356.23	358.68	357.29	359.04
354.90	361.56	360.98	359.76	361.80	360.14	361.16	362.68
362.39	360.53	363.38	362.85	361.11	361.16	362.44	362.14
361.65	361.27	361.26	362.17	362.88	360.93	362.31	361.23
361.62	362.80	361.16	362.26	361.70	361.89	359.84	359.68
359.69	359.96	358.27	358.77	356.76	356.53	356.57	355.99
354.46	353.41	352.94	353.00	352.68	352.28	351.47	349.94
350.06	348.77	348.21	347.38	347.42	346.83	345.65	344.67
344.71	343.68	343.78	343.16	342.55	342.40	341.02	341.02
340.61	339.99	339.58	338.92	339.47	338.32	339.09	338.72
338.91	337.67	336.97	338.35	337.69	337.10	338.09	337.70
337.79	337.65	339.01	338.36	338.98	337.99	338.56	342.02
338.34	338.04	340.46	340.38	339.28	341.98	341.56	345.09
344.46	340.66	344.76	344.74	345.27	346.58	349.72	349.32
349.31	350.57	351.05	348.70	349.80	350.46	352.52	350.17
351.59	350.70	351.70	353.09	349.93	354.21	355.25	353.57
354.44	356.12	358.39	354.84	355.77	357.72	358.81	357.00
359.01	358.91	359.83	359.62	360.35	362.30	360.79	363.03
362.62	361.61	362.00	361.31	363.78	360.87	361.85	361.88
362.15	362.68	361.83	362.52	362.56	363.06	362.18	362.21
362.26	360.67	363.35	361.87	363.43	361.65	361.37	361.61

ARRAY OF PRESSURES EVENED -- FILE - W54505

358.96	359.40	357.10	358.03	353.67	356.12	352.30	352.54
350.63	348.23	349.95	348.43	345.76	344.51	344.33	343.13
340.61	339.85	339.21	338.87	337.45	336.57	334.29	331.89
333.65	331.77	330.64	329.93	329.66	329.10	327.14	325.57
325.74	325.74	323.49	323.80	321.97	322.63	322.06	321.84
321.23	319.93	319.15	319.03	319.42	318.76	319.79	318.59
318.36	317.48	318.05	319.71	320.01	316.72	319.59	317.95
325.84	322.87	327.41	330.12	332.04	326.99	337.03	339.85
337.84	338.75	341.86	336.27	347.67	345.93	349.38	344.53
346.27	348.62	342.03	352.03	349.11	351.54	347.74	353.33
350.75	354.04	352.20	352.44	353.62	352.47	354.04	356.90
356.17	357.17	359.79	355.70	356.49	357.22	358.45	357.91
354.40	359.70	357.71	357.20	361.22	360.99	361.41	361.66
361.56	361.61	363.15	364.89	362.07	362.12	362.64	364.08
363.42	363.59	363.00	363.49	362.37	361.61	362.93	361.41
362.07	363.71	361.56	360.75	360.55	361.14	359.18	360.77
358.91	359.11	358.20	356.27	355.34	354.62	352.22	353.74
350.26	349.75	347.86	347.25	347.10	347.79	345.80	344.09
343.80	340.95	340.59	339.66	339.17	338.60	337.92	336.49
336.15	334.02	334.58	333.55	333.09	331.50	332.48	331.82
331.10	330.98	331.35	329.41	331.37	329.12	330.64	328.53
331.96	329.10	328.75	329.95	330.76	329.10	331.52	331.10
332.94	331.30	332.87	332.50	334.41	333.97	332.18	342.01
334.83	333.11	337.65	336.91	338.19	341.37	336.74	342.01
342.40	337.21	339.19	342.01	341.00	344.51	349.75	346.03
348.08	352.32	349.58	347.05	347.84	349.85	353.87	348.74
354.06	351.51	353.55	352.59	348.38	351.34	355.41	355.34
357.79	357.10	355.60	356.02	355.80	356.41	355.21	357.00
354.92	359.40	359.40	360.06	358.54	360.36	360.33	360.97
361.31	361.22	363.81	363.15	364.35	362.56	363.35	362.02
361.36	363.25	363.44	364.87	363.71	364.42	362.42	363.57
364.33	361.14	364.42	362.64	363.13	361.51	362.49	360.65

ARRAY OF PRESSURES EVENED -- FILE - W54506

358.07	354.97	353.36	350.13	348.98	347.50	342.99	343.26
340.96	338.90	338.75	336.80	334.09	331.36	330.93	328.75
328.10	326.47	326.02	324.84	322.11	320.28	320.20	318.17
318.10	316.04	314.67	313.56	312.86	312.49	310.91	310.51
308.85	307.72	307.70	308.30	307.10	305.24	304.42	303.81
304.47	303.89	305.39	302.69	306.92	303.79	302.74	303.06
306.60	305.54	315.04	309.30	310.13	318.48	310.41	325.47
315.59	330.96	343.04	341.16	335.24	341.13	338.85	344.21
341.86	347.50	347.32	349.83	351.86	347.35	351.08	351.43
347.15	350.71	350.23	347.00	349.58	344.99	351.36	350.63
350.68	352.54	357.42	358.00	361.11	361.88	364.79	365.39
362.66	362.84	364.21	368.63	366.90	367.50	363.56	366.85
367.10	366.19	365.19	363.76	368.10	367.15	369.25	368.78
370.03	368.98	370.68	369.48	371.76	370.88	370.63	373.46
371.86	375.22	370.58	371.33	371.63	370.78	369.20	368.53
367.80	367.97	365.74	361.48	360.96	359.78	358.02	360.91
356.55	352.54	351.36	349.03	348.20	344.74	344.87	342.03
340.48	338.40	337.47	336.37	335.99	333.86	332.41	331.28
329.85	329.60	328.20	326.27	326.97	324.49	325.12	324.16
323.09	323.09	321.38	323.26	321.53	319.53	320.88	319.33
318.33	320.43	320.66	318.38	319.50	317.27	320.71	316.85
321.31	318.25	322.79	321.51	323.16	322.28	324.54	327.10
321.38	329.78	336.95	324.04	328.55	327.22	331.23	334.89
338.12	336.12	342.96	340.08	346.07	341.76	345.14	342.49
345.04	341.83	344.74	341.56	345.84	345.49	344.16	345.82
346.12	348.48	346.90	345.74	344.62	347.12	350.58	348.43
351.01	353.04	356.42	358.88	359.75	363.49	365.19	366.82
366.80	366.92	365.19	364.57	365.64	364.39	365.29	366.14
364.06	366.50	364.21	367.07	364.97	367.37	368.20	367.32
367.30	370.05	372.23	372.06	371.73	371.43	370.48	371.03
371.41	369.75	372.51	373.09	371.96	371.58	370.61	371.13
368.37	367.32	367.12	368.05	365.84	364.26	364.29	362.54

ARRAY OF PRESSURES EVENED -- FILE - W54507

373.26	362.24	362.79	360.11	356.95	348.99	350.96	348.74
345.78	343.13	339.03	336.99	333.30	330.64	328.90	329.02
328.72	325.23	322.68	320.20	317.50	317.90	316.16	314.44
312.85	313.18	311.61	311.51	309.06	309.59	308.98	308.60
308.55	308.63	308.53	307.34	308.93	308.48	307.97	309.31
309.76	311.00	309.31	309.61	311.99	315.25	312.70	314.49
321.32	315.98	319.42	323.62	323.67	329.00	325.28	338.48
333.83	347.27	344.49	347.63	346.06	352.56	341.06	357.99
362.06	363.20	357.94	361.43	367.27	365.77	368.60	371.46
366.18	372.88	371.66	370.37	370.55	368.86	368.23	368.73
372.45	371.33	368.53	369.21	371.11	372.55	372.14	375.33
375.81	377.17	375.99	375.71	377.20	379.07	377.75	379.20
378.97	384.45	381.82	384.40	388.04	386.27	387.84	384.17
389.05	390.47	390.19	390.95	394.33	392.31	392.82	395.65
392.52	393.30	396.18	394.92	394.33	396.28	390.49	387.81
390.09	387.79	384.12	380.79	379.47	375.53	374.57	368.18
367.24	360.52	360.69	355.56	354.37	352.00	347.17	346.24
344.09	341.56	339.44	337.74	334.86	333.62	333.30	334.86
330.09	328.01	328.01	326.19	326.19	323.79	324.47	322.60
323.39	324.96	323.94	325.76	325.11	326.47	324.53	324.37
325.23	326.32	325.33	327.25	326.93	326.98	327.20	325.81
327.36	330.67	328.85	325.13	332.36	328.67	337.39	334.94
329.38	333.70	335.65	340.09	335.87	341.13	340.22	341.43
347.60	352.23	346.31	349.57	352.68	352.38	351.82	353.64
353.19	353.84	348.13	359.28	355.94	358.32	352.66	358.85
361.86	364.18	361.20	362.84	367.24	366.25	364.28	367.09
367.85	369.46	369.64	370.93	369.34	370.70	372.12	371.59
374.95	374.06	372.57	373.61	379.55	376.97	379.95	380.36
379.04	381.42	384.20	384.50	382.58	384.10	386.22	387.01
386.78	388.19	390.59	389.71	390.37	391.45	391.66	393.93
393.96	395.12	392.62	396.10	392.72	394.81	394.28	392.46
390.37	391.00	391.45	388.75	387.43	384.15	379.27	374.92

ARRAY CF FRESSURES EVENED -- FILE - W54508

343.14	342.20	333.51	332.90	328.66	324.41	322.50	321.63
316.71	312.92	309.53	310.72	308.69	303.05	301.78	301.81
299.68	299.01	297.23	295.87	294.58	295.23	293.05	292.31
291.29	289.71	290.23	289.51	288.72	289.90	288.84	290.89
290.30	290.15	292.53	292.06	290.62	292.90	294.58	291.86
296.36	296.91	292.35	301.78	301.69	303.54	302.11	305.87
323.79	306.69	325.35	332.92	328.04	346.95	339.28	349.11
346.38	336.86	350.02	360.74	356.98	352.47	363.11	356.61
367.10	364.85	372.27	364.85	369.97	368.83	368.54	370.17
367.45	363.88	370.71	367.35	369.35	369.90	373.76	368.36
371.21	372.47	371.63	374.90	376.75	377.49	377.97	379.75
382.89	383.01	380.94	382.52	383.09	386.90	386.01	386.75
384.97	389.23	389.72	395.64	395.71	392.59	399.97	401.16
405.09	404.13	406.28	408.11	411.58	413.28	418.85	417.86
418.23	416.95	420.44	413.56	412.32	405.14	397.79	397.39
392.79	386.58	373.09	372.67	367.79	358.24	356.90	346.56
341.43	336.56	335.12	330.45	330.27	326.81	322.60	321.26
320.30	319.01	317.87	316.04	314.98	314.21	312.90	312.25
312.38	311.21	309.85	311.36	310.50	312.08	310.05	311.12
311.39	311.46	312.50	307.63	308.34	310.05	310.92	310.47
310.00	313.61	310.79	310.37	312.45	315.25	314.88	315.59
318.47	318.37	329.11	323.42	329.95	316.61	334.38	334.33
330.22	341.19	338.12	340.77	339.92	340.17	346.11	342.45
344.28	344.40	345.27	345.59	351.95	346.04	340.59	345.42
354.72	348.86	353.59	360.62	352.70	357.97	364.33	363.66
363.66	362.94	365.74	370.59	369.18	369.28	372.72	372.17
369.72	372.03	374.52	378.11	374.33	377.57	375.86	377.47
379.13	382.07	379.92	380.64	381.36	384.67	380.81	384.42
387.10	388.56	388.73	390.49	389.89	392.05	394.65	395.14
400.24	401.60	404.55	407.94	408.98	411.33	413.88	415.91
417.19	418.16	421.72	417.19	419.74	412.57	413.09	410.54
403.80	399.97	388.68	383.19	378.34	375.61	375.27	363.16

ARRAY OF PRESSURES EVENED -- FILE - W54509

387.95	378.41	376.93	371.38	359.21	359.61	350.24	348.31
340.00	334.01	322.66	323.41	315.73	309.01	303.63	301.10
301.55	298.06	293.82	291.36	289.00	286.52	286.19	286.11
286.04	286.57	287.60	289.45	286.52	284.68	287.47	293.32
290.98	298.19	295.78	296.56	298.64	306.17	299.92	304.51
315.58	310.29	315.96	318.32	339.98	321.15	349.74	333.83
340.53	341.18	348.39	346.96	356.39	356.24	353.46	359.38
365.28	357.75	362.49	362.37	367.46	363.52	367.99	364.15
370.43	366.84	362.09	375.34	368.67	374.54	375.12	374.99
377.83	374.82	374.89	374.69	374.54	378.08	380.47	377.40
378.48	379.76	384.63	380.54	382.15	384.78	383.23	384.46
386.99	385.39	387.57	388.70	385.51	390.40	392.44	394.42
397.28	398.99	400.29	404.76	403.16	408.00	405.67	409.61
407.05	412.67	411.92	413.67	415.81	413.17	415.53	414.65
415.78	413.90	411.97	408.15	406.17	405.34	403.73	403.83
400.90	402.28	397.03	394.04	390.46	388.32	380.79	374.99
368.87	368.97	364.48	356.60	351.17	346.30	340.81	336.77
333.80	330.82	322.33	320.85	314.65	311.31	308.43	305.47
303.68	302.40	302.40	300.87	302.38	304.19	303.16	305.14
309.36	307.30	311.54	308.38	310.89	311.99	312.07	324.67
319.17	322.79	324.74	331.29	325.95	324.74	331.67	325.95
328.08	333.25	334.43	338.27	337.59	335.91	338.10	341.11
337.12	341.31	332.52	350.22	349.09	343.92	346.23	352.43
344.12	348.26	356.34	355.32	358.65	361.72	361.62	361.11
365.08	362.72	361.62	360.66	366.58	366.13	372.81	370.40
373.26	371.18	369.02	378.61	379.41	380.34	376.30	379.19
381.02	378.48	382.30	382.25	381.57	383.28	385.51	384.88
387.07	387.39	384.53	389.25	390.35	392.39	393.67	395.93
394.57	397.18	397.21	400.29	400.87	401.95	407.00	405.29
411.41	410.86	413.80	415.13	414.30	417.61	418.19	418.72
421.18	421.55	422.48	420.47	420.45	418.32	417.14	420.02
413.87	417.59	416.46	413.25	409.18	410.33	403.43	400.39

ARRAY OF PRESSURES EVENED -- FILE - W5451C

405.01	403.81	403.91	404.71	402.71	403.06	404.18	404.63
406.10	407.48	406.35	405.73	407.65	408.13	407.70	404.61
407.50	403.58	401.14	399.34	396.42	393.85	388.43	381.54
379.25	369.93	359.52	350.01	344.10	336.33	326.25	323.43
318.19	312.15	312.50	312.47	313.27	309.25	308.20	295.32
310.65	287.93	293.37	314.57	315.97	312.79	312.02	321.31
317.16	312.05	321.66	322.28	315.59	323.23	321.91	321.98
327.10	326.77	328.57	330.32	334.31	334.29	334.11	336.01
338.03	338.86	346.39	346.99	348.04	348.27	349.54	354.83
353.93	355.46	358.10	360.00	361.37	365.29	364.67	364.64
367.49	371.13	372.51	374.40	372.68	375.05	376.12	377.87
379.30	381.87	381.49	382.94	385.61	387.41	387.43	386.11
387.08	390.58	388.66	390.00	389.65	393.20	393.60	393.87
394.90	394.90	395.97	393.55	395.07	394.72	395.17	393.10
397.97	394.65	396.57	394.37	395.62	396.54	395.40	395.62
395.95	395.00	396.79	395.67	396.19	394.00	396.37	395.47
396.79	394.40	396.07	396.69	397.94	396.59	399.54	397.49
401.51	403.13	401.66	403.31	402.76	401.99	403.48	405.71
404.83	404.81	405.28	401.04	401.04	395.95	391.20	385.89
382.89	372.28	368.51	356.50	347.82	341.98	337.86	336.58
324.83	325.25	320.36	319.91	309.97	304.96	301.16	297.12
302.78	299.51	298.14	295.32	295.92	302.96	306.50	299.14
307.43	307.10	311.45	308.55	312.55	313.94	310.72	320.11
319.71	322.36	317.64	332.49	331.09	336.73	338.81	337.68
338.96	345.05	345.25	347.62	348.02	353.56	353.68	356.35
357.65	358.60	358.83	360.72	364.77	362.27	365.87	365.97
370.88	368.69	371.78	373.65	374.08	377.72	376.52	380.19
382.04	382.61	384.26	383.19	384.84	385.41	387.38	391.18
388.93	391.73	390.18	392.23	393.47	395.65	395.50	397.37
397.62	397.89	402.96	400.34	401.11	403.68	403.93	405.63
404.86	405.28	406.85	406.68	408.75	406.25	405.73	404.86
409.45	407.98	406.75	405.36	406.78	406.65	406.05	406.25

ARRAY OF PRESSURES EVENED -- FILE - W54511

402.31	400.95	402.71	402.43	403.01	404.17	404.14	404.14
405.42	404.67	402.38	403.24	401.03	402.86	402.94	401.03
402.51	401.76	402.46	402.51	402.66	403.66	404.07	405.67
407.33	406.35	409.21	411.47	412.25	412.47	413.91	414.66
416.52	416.84	418.72	419.38	419.93	420.58	421.41	423.12
420.91	420.96	422.01	417.95	418.00	414.03	410.69	402.81
398.47	394.98	392.85	387.95	383.73	380.02	374.40	369.58
367.65	365.91	360.52	360.67	358.06	357.00	357.81	356.70
360.77	358.13	353.94	356.65	357.81	363.10	364.83	363.25
364.94	363.30	365.66	368.88	368.02	369.30	369.53	370.86
369.88	370.31	366.59	366.62	365.21	365.56	367.22	368.85
365.99	366.47	365.94	367.67	368.52	366.39	367.80	367.60
370.06	371.69	374.37	376.13	376.08	378.82	379.54	378.79
383.26	386.87	386.27	387.75	389.43	391.09	388.40	391.92
390.56	392.92	391.49	393.57	392.44	392.44	393.25	391.19
392.02	390.69	392.29	392.80	395.13	395.56	392.87	396.51
396.59	398.14	398.09	399.25	401.61	402.38	402.53	402.13
402.33	401.91	401.98	402.79	404.02	404.09	400.40	403.29
403.99	403.66	404.94	403.46	406.27	408.36	407.40	409.76
410.52	412.00	413.30	415.11	416.16	417.54	420.61	421.13
422.67	421.38	422.44	422.34	424.05	424.57	423.67	423.42
424.42	423.77	421.99	419.70	416.47	412.20	405.85	402.46
394.85	394.20	386.97	382.86	385.24	372.82	370.33	364.18
362.32	360.77	358.58	354.39	357.78	353.01	352.41	351.66
354.59	354.77	359.74	357.10	362.70	361.65	360.72	363.13
365.01	363.96	365.99	369.33	369.20	371.34	367.77	366.57
366.54	369.08	369.80	367.75	367.47	367.55	365.99	369.43
370.63	370.93	369.58	369.65	371.01	372.69	374.27	373.47
375.90	378.71	375.28	380.72	382.83	384.89	386.62	389.63
389.58	391.94	393.55	395.98	396.96	396.64	396.01	398.52
398.97	400.25	397.67	398.37	400.15	396.86	399.50	400.50
399.80	398.04	398.29	398.14	399.45	400.65	401.23	403.16

ARRAY OF PRESSURES EVENED -- FILE - W54512

390.46	391.87	390.76	392.60	395.29	395.32	397.38	398.87
403.32	401.76	402.92	407.05	408.71	408.96	410.02	410.45
412.56	414.50	413.06	414.50	415.48	413.74	416.64	414.80
416.16	413.24	413.47	414.50	414.07	413.09	413.11	412.66
415.88	416.54	417.44	416.36	418.91	419.48	419.46	418.96
419.41	422.05	423.11	424.39	424.75	425.70	425.88	424.87
424.62	426.68	425.10	422.38	425.15	425.10	423.94	423.61
424.67	423.39	421.72	421.88	421.42	421.35	419.43	421.72
418.23	417.87	415.86	412.64	409.31	406.22	400.80	393.83
390.38	386.68	384.64	382.45	376.61	373.79	372.66	372.23
367.95	367.85	368.96	366.09	366.77	366.49	364.98	370.87
368.28	371.65	372.13	374.37	377.97	378.07	375.08	380.51
378.42	382.35	383.38	383.61	381.55	381.12	380.16	377.95
381.37	380.89	379.68	380.82	380.14	380.44	381.70	381.82
384.47	381.27	385.57	384.04	385.37	385.20	386.35	385.88
388.52	386.30	388.17	387.94	389.78	390.58	391.99	392.77
393.43	393.05	395.54	396.22	397.36	398.56	399.97	400.02
403.40	404.00	407.00	406.72	411.18	410.65	410.17	413.67
413.84	414.65	416.26	417.95	416.94	415.93	419.21	417.14
418.02	417.92	415.88	416.79	417.87	416.84	416.69	417.22
417.04	418.00	417.27	419.13	418.96	419.91	419.64	420.57
420.37	422.91	423.56	423.51	424.34	424.17	424.95	425.75
425.43	426.53	428.19	427.69	424.95	423.64	426.94	425.10
422.93	423.44	421.40	420.04	421.75	420.99	419.61	420.52
418.96	417.97	414.75	414.00	412.06	402.89	399.95	395.37
393.08	390.08	385.35	382.60	380.79	377.39	373.36	374.07
371.05	369.16	370.17	369.01	370.29	370.70	372.26	371.05
372.73	374.87	377.59	381.09	382.05	383.38	382.63	383.69
384.49	385.47	385.07	384.04	389.70	384.62	382.98	385.62
384.36	383.91	384.89	382.20	384.44	384.47	386.61	387.23
387.34	389.80	388.49	390.03	390.76	391.04	395.67	394.41
394.54	394.54	394.71	396.35	398.92	397.93	396.42	397.03

ARRAY OF PRESSURES EVENED -- FILE - W54513

392.03	393.56	394.20	396.27	397.92	398.85	400.03	402.30
404.94	404.96	405.31	408.86	409.13	408.84	408.93	410.44
410.19	411.71	410.32	412.63	412.89	411.57	412.63	413.17
412.89	411.73	411.72	412.54	412.52	411.83	412.29	412.58
413.72	413.71	414.95	413.66	414.87	415.13	414.89	414.93
415.12	416.35	417.27	417.36	418.22	417.89	417.97	417.11
417.63	418.93	416.37	415.58	416.66	417.29	415.80	416.37
415.21	415.27	415.01	413.98	414.44	414.43	413.47	415.15
413.31	413.84	412.75	411.91	409.51	408.34	405.47	402.82
401.53	399.43	398.18	396.75	394.09	392.78	392.06	392.11
389.21	388.88	389.29	388.26	388.32	387.64	386.37	389.05
387.30	389.14	389.87	390.86	392.71	392.56	391.00	394.25
393.01	395.19	395.55	395.82	394.67	394.82	393.75	392.75
394.07	394.24	393.79	394.30	393.23	393.78	393.37	393.66
393.53	391.11	390.79	387.63	387.54	387.51	387.41	386.41
387.66	386.32	388.39	387.78	389.11	390.65	392.44	393.04
393.39	393.81	397.01	399.01	399.40	401.38	403.46	403.52
406.57	406.98	409.16	409.32	412.06	410.82	411.23	412.61
413.29	413.71	413.45	414.03	414.48	413.89	415.27	413.89
414.89	414.86	413.46	414.07	415.13	414.42	414.20	414.31
414.17	415.21	414.40	415.33	415.39	416.30	416.06	416.13
416.47	417.94	417.63	417.75	417.66	417.23	418.59	418.68
417.75	418.54	419.07	419.07	417.44	416.33	418.15	416.82
415.08	416.61	414.90	414.14	415.98	415.35	415.18	415.30
415.20	414.42	412.88	412.35	411.93	407.36	406.21	403.62
403.05	401.24	398.75	398.04	396.91	394.46	392.15	392.98
391.67	389.77	390.31	389.97	389.97	390.00	390.31	389.13
390.85	391.80	392.69	395.27	395.04	396.63	395.55	395.77
397.06	396.64	396.93	396.25	399.19	396.42	395.11	396.42
395.93	395.06	395.17	393.82	394.90	395.70	395.58	394.42
394.65	394.87	391.78	392.29	392.10	391.07	393.46	392.56
392.57	393.25	393.04	394.97	396.54	395.46	396.01	397.36

ARRAY OF PRESSURES EVENED -- FILE - W54514

393.59	395.25	397.63	399.95	400.55	402.38	402.68	405.73
406.56	408.15	407.70	410.67	409.55	408.71	407.83	410.43
407.81	408.93	407.57	410.75	410.30	409.40	408.63	411.55
409.61	410.22	409.98	410.58	410.97	410.58	411.46	412.49
411.55	410.88	412.45	410.97	410.84	410.77	410.32	410.90
410.84	410.65	411.44	410.32	411.70	410.09	410.07	409.36
410.65	411.18	407.64	408.78	408.18	409.49	407.66	409.12
405.75	407.14	408.30	406.09	407.47	407.51	407.51	408.58
408.39	409.81	409.64	411.18	409.70	410.47	410.13	411.80
412.69	412.17	411.72	411.05	411.57	411.76	411.46	412.00
410.47	409.91	409.61	410.43	409.87	408.80	407.77	407.23
406.33	406.63	407.62	407.36	407.45	407.06	406.93	407.98
407.60	408.03	407.72	408.03	407.79	408.52	407.34	407.55
406.78	407.60	407.90	407.79	406.33	407.12	405.04	405.49
402.59	400.96	396.00	391.23	389.71	389.81	388.46	386.94
386.81	386.34	388.61	387.62	388.44	390.72	392.89	393.31
393.36	394.56	398.47	401.80	401.45	404.20	406.95	407.02
409.74	409.96	411.33	411.91	412.94	410.99	412.30	411.55
412.73	412.77	410.65	410.11	412.02	411.85	411.33	410.65
411.76	411.80	411.03	411.35	412.38	412.00	411.72	411.40
411.29	412.43	411.53	411.53	411.83	412.69	412.49	411.70
412.58	412.96	411.70	412.00	410.97	410.30	412.23	411.61
410.07	410.54	409.94	410.45	409.94	409.01	409.36	408.54
407.23	409.79	408.41	408.24	410.22	409.70	410.75	410.09
411.44	410.86	411.01	410.71	411.80	411.83	412.47	411.87
413.03	412.41	412.15	413.48	413.03	411.53	410.95	411.89
412.30	410.39	410.45	410.92	409.66	409.31	408.37	407.21
408.97	408.73	407.79	409.44	408.03	409.87	408.48	407.85
409.64	407.81	408.80	408.45	408.67	408.22	407.23	407.21
407.49	406.20	405.45	405.45	405.36	406.93	404.55	401.60
401.97	399.93	395.08	394.56	393.44	391.10	391.25	390.72
390.61	391.96	391.36	393.59	394.17	392.99	395.59	397.70

ARRAY OF PRESSURES EVENED -- FILE - W54515

402.68	403.94	405.76	407.61	407.73	409.48	410.28	411.89
413.09	413.95	414.18	415.59	415.13	414.35	413.89	415.66
414.10	414.46	414.54	416.01	416.21	415.51	415.22	417.76
416.09	416.75	416.35	417.12	416.29	416.76	417.37	417.27
416.81	416.36	417.28	416.44	415.34	415.23	415.22	415.62
415.11	414.56	414.73	414.24	415.16	413.80	414.94	413.99
415.21	415.69	412.79	414.27	413.17	414.70	413.72	414.96
412.74	413.76	413.89	412.26	412.80	412.62	412.68	413.30
412.75	414.31	412.50	414.45	413.18	413.40	413.54	414.74
414.92	414.73	414.58	414.27	414.62	415.24	415.65	415.51
415.12	414.25	414.76	415.47	415.21	414.87	413.53	413.25
412.47	412.49	412.96	411.99	411.53	411.63	410.25	409.91
409.86	409.43	408.27	407.82	407.61	408.02	407.17	407.01
407.28	407.49	407.81	408.59	407.16	408.46	407.32	407.42
405.35	404.88	401.83	399.38	397.97	398.53	398.26	396.99
397.42	396.32	399.22	398.50	399.48	400.62	401.61	402.27
402.35	404.12	406.77	409.24	409.09	411.22	412.17	413.49
414.36	414.94	415.67	415.94	417.46	416.93	416.18	416.61
417.61	417.07	416.19	415.47	417.22	417.45	416.67	416.52
416.85	417.77	417.26	417.41	417.92	417.67	417.46	416.96
417.23	417.26	416.31	416.57	416.53	416.59	416.34	415.94
415.93	416.41	415.31	415.58	414.18	414.48	415.89	415.24
414.07	415.33	413.76	414.46	413.94	413.69	413.53	413.43
412.21	414.19	413.48	413.78	414.44	414.27	414.66	414.26
414.31	414.55	414.50	414.00	414.85	414.79	415.14	414.18
415.98	414.94	414.46	416.12	416.13	415.23	414.65	415.14
415.87	414.72	414.59	415.12	414.36	413.93	413.57	412.24
413.21	413.09	411.72	413.01	412.22	412.59	412.01	410.03
411.23	409.59	408.70	407.82	407.88	408.32	406.92	407.38
407.83	406.63	407.47	407.01	407.15	408.12	407.11	405.03
405.61	405.17	401.59	401.09	400.85	399.41	400.28	400.31
399.83	400.72	399.64	403.19	402.93	402.23	403.79	405.29

ARRAY OF PRESSURES EVENED -- FILE - W54516

411.77	412.63	413.89	415.27	414.92	416.58	417.88	418.06
419.62	419.75	420.66	420.51	420.70	419.98	419.94	420.89
420.40	420.00	421.51	421.26	422.11	421.63	421.82	423.98
422.56	423.28	422.72	423.65	421.62	422.94	423.27	422.04
422.08	421.85	422.11	421.91	419.84	419.69	420.12	420.34
419.38	418.47	418.03	418.16	418.63	417.51	419.81	418.62
419.77	420.19	417.94	419.77	418.17	419.92	419.79	420.79
419.73	420.37	419.48	418.43	418.13	417.74	417.85	418.01
417.10	418.81	415.37	417.72	416.67	416.32	416.95	417.67
417.16	417.28	417.44	417.49	417.67	418.72	419.84	419.02
419.77	418.58	419.91	420.51	420.55	420.94	419.30	419.26
418.60	418.35	418.30	416.63	415.61	416.21	413.57	411.84
412.13	410.84	408.81	407.61	407.42	407.52	407.01	406.46
407.77	407.38	407.72	409.40	407.99	409.79	409.60	409.35
408.11	408.80	407.66	407.54	406.23	407.25	408.06	407.04
408.03	406.30	409.82	409.38	410.51	410.52	410.33	411.22
411.35	413.69	415.07	416.69	416.72	418.23	417.39	419.96
418.98	419.92	420.02	419.96	421.98	422.87	420.06	421.68
422.50	421.36	421.73	420.84	422.43	423.06	422.01	422.40
421.94	423.74	423.49	423.46	423.45	423.34	423.20	422.53
423.17	422.10	421.10	421.62	421.23	420.49	420.18	420.18
419.28	419.85	418.91	419.16	417.40	418.66	419.54	418.87
418.08	420.13	417.59	418.46	417.94	418.37	417.70	418.31
417.19	418.59	418.55	419.31	418.67	418.84	418.57	418.43
417.18	418.23	417.98	417.30	417.90	417.76	417.81	416.50
418.93	417.47	416.78	418.77	419.23	418.93	418.35	418.39
419.44	419.06	418.73	419.32	419.06	418.55	418.77	417.28
417.45	417.45	415.65	416.57	416.42	415.31	415.55	412.22
412.82	411.36	408.60	407.18	407.10	408.43	406.62	407.55
408.17	407.06	409.49	408.57	408.93	409.31	409.68	408.45
409.25	410.41	408.11	407.62	408.26	407.72	409.31	409.91
409.06	409.48	407.91	412.78	411.68	411.47	412.00	412.89

ARRAY OF PRESSURE COEFFICIENTS -- FILE - W54501

0.1087	C.1C32	0.1108	0.1052	C.1039	0.1101	0.1079	C.1077
0.1075	C.1C61	0.1C52	0.1044	C.1033	0.0999	0.0995	0.0966
0.0961	C.1C01	0.0982	0.0956	C.0935	0.0932	0.0924	C.0918
0.0913	C.0955	0.0935	0.0887	C.0810	0.0822	0.0854	C.0823
0.0801	C.0793	0.0775	0.0756	C.0738	0.0752	0.0782	0.0774
0.0741	C.0766	0.0746	0.0749	C.07C8	0.0697	0.0668	0.0642
0.0679	C.0645	0.0645	0.0693	C.0679	0.0621	0.0624	0.0586
0.0600	C.0575	0.0553	0.0567	C.0606	0.0637	0.0641	0.0605
0.0561	C.0545	0.0585	0.057C	C.0587	0.0526	0.05C6	C.0511
0.0582	C.0615	0.0647	0.0697	C.0665	0.0639	0.0674	0.0679
0.0684	C.0692	0.0683	0.0685	C.0753	0.0835	0.0821	0.0821
0.0821	C.0772	0.0810	0.0834	C.0863	0.0928	0.09C9	C.0893
0.0896	C.0960	0.0982	0.0988	C.0980	0.0939	0.0935	0.0920
0.0908	0.0870	0.0898	0.0924	C.0945	0.0919	0.0918	C.09C4
0.0924	C.0948	0.0935	0.0961	C.0960	0.0961	0.0987	0.0990
0.1038	C.1C30	0.1068	0.1C39	C.1035	0.1035	0.1034	C.10C9
0.1033	C.1C02	0.0984	0.1046	C.1084	0.1119	0.1090	0.1084
0.1089	C.1117	0.1108	0.1053	C.1041	0.1026	0.1038	0.1036
0.1015	C.1C05	0.0954	0.0915	C.0910	0.0919	0.0933	0.0922
0.0949	C.0901	0.0918	0.0883	C.0879	0.0926	0.0882	C.0875
0.0875	C.0874	0.0861	0.0827	C.0824	0.0826	0.08C7	0.0794
0.0813	C.0828	0.0811	0.08C9	C.0792	0.0775	0.0760	0.0790
0.0775	C.0753	0.0777	0.0769	C.0759	0.0699	0.0679	0.0697
0.0711	C.0698	0.0674	0.0682	C.0691	0.0638	0.0629	0.0655
0.0683	C.0665	0.0676	0.0718	C.0730	0.0730	0.0718	0.0729
0.0761	C.0704	0.0666	0.0673	C.0695	0.0723	0.0803	0.0865
0.0844	C.0841	0.0813	0.0796	C.0829	0.0873	0.0916	0.0961
0.0995	C.0985	0.0971	0.0953	C.0947	0.0950	0.0954	C.0960
0.0991	C.0978	0.0971	0.0985	C.1005	0.1007	0.0970	0.0936
0.0953	C.0954	0.0971	0.0979	C.0975	0.0924	0.0923	0.0976
0.0983	C.0981	0.0973	C.096C	C.0945	0.1014	0.1018	0.1017
0.1085	C.1C81	0.1052	0.1051	C.1061	0.1085	0.1060	0.1111

ARRAY OF PRESSURE COEFFICIENTS -- FILE - W54502

0.1110	C.1C52	0.1128	0.1C99	C.1074	0.1070	0.1063	0.1028
0.1C29	C.0997	0.0978	0.0974	C.0974	0.0980	0.0937	0.0926
0.0929	C.0956	0.0931	0.0894	C.0862	0.0862	0.0843	0.0851
0.0809	C.0788	0.0772	0.077C	C.0725	0.0710	0.0709	0.0696
0.0670	C.0670	0.0640	0.0638	C.0601	0.0594	0.0600	0.0587
0.0576	C.0575	0.0559	C.0548	C.0504	0.0490	0.0469	0.0463
0.0495	C.0455	0.0458	0.046C	C.0446	0.0414	0.0420	0.0416
0.0399	C.0366	0.0334	0.0358	C.0394	0.0432	0.0477	0.0454
0.0388	C.0341	0.0383	C.0443	C.05C2	0.0466	0.0435	0.0491
0.0560	C.0559	0.0553	0.0554	C.0563	0.0596	0.0634	0.0642
0.0684	C.0731	0.0735	0.0797	C.0818	0.0821	0.0866	C.0888
0.0837	C.0779	0.0768	0.0849	C.0899	0.0914	0.0934	0.0977
0.1021	C.1C64	0.1C82	0.1020	C.10C0	0.1001	0.1022	C.1C51
0.1037	C.1C37	0.1C42	C.1C59	C.1019	C.1005	0.1033	C.10C2
0.0976	C.1C09	0.1CC8	0.1C42	C.1040	0.1029	0.1066	0.1055
0.1086	C.1C96	0.1C96	0.1118	C.11C2	0.1065	0.1067	0.1C31
0.1065	C.1120	0.1C98	0.1C75	C.1053	0.1075	0.1084	0.1066
0.1047	C.1C40	0.1C42	0.1018	C.1004	0.0978	0.0983	0.0959
0.0953	C.0943	0.0902	0.0866	C.0863	0.0865	0.0849	0.0831
0.0852	C.0819	0.0825	0.0799	C.0785	C.0769	0.0752	0.0755
0.0715	C.0736	0.0713	0.0696	C.0689	0.0682	0.0712	0.0681
0.0674	C.0667	0.0642	0.0665	C.0629	0.0648	0.0613	0.0624
0.0599	C.0600	0.0634	0.0615	C.0607	0.0590	0.0572	0.0560
0.0557	C.0560	0.0564	0.0573	C.0536	0.0545	0.0576	C.0631
0.0626	C.0648	0.0663	0.0658	C.0646	0.0688	0.0712	C.0745
0.0742	C.0699	0.0719	0.0726	C.0720	0.0733	0.0793	0.0819
0.0789	C.0790	0.0826	0.0859	C.0893	0.0912	0.0915	0.0866
0.0915	0.0994	0.1C28	0.098C	C.10C9	0.1037	0.1034	0.1050
0.1063	C.1C46	0.1028	0.1064	C.1070	0.1105	0.1134	0.1110
0.1072	C.1C47	0.1C40	0.1C33	C.1014	0.0995	0.1013	C.1058
0.1041	C.1C69	0.1C40	0.1036	C.1041	0.1086	0.1086	0.1074
0.1108	C.1119	0.1117	0.1128	C.1137	0.1120	0.1088	0.1143

ARRAY OF PRESSURE COEFFICIENTS -- FILE - W54503

0.1133	C.1C72	0.1148	0.1142	C.11C9	0.1039	0.1047	0.0979
0.0982	C.0933	0.0961	0.0995	C.0995	0.0960	0.0879	0.0887
0.0898	C.0912	0.0879	0.0798	C.0789	0.0792	0.0761	0.0784
C.07C5	C.0713	0.0675	0.0653	C.0641	0.0599	0.0563	0.0569
0.0539	C.0548	0.0505	0.0465	C.0465	0.0436	0.0419	C.04C0
0.0410	C.0384	0.0372	0.0348	C.03C1	0.0284	0.0269	0.0283
0.0311	C.0265	0.0271	0.0227	C.0214	0.0208	0.0215	0.0128
0.0099	C.0C96	0.0116	0.0149	C.0215	0.0285	0.0314	C.03C3
0.0214	C.0137	0.0203	0.0315	C.0417	0.0509	0.0558	0.0552
0.0538	C.0609	0.0663	0.0698	C.0689	0.0657	0.0594	0.0618
0.0684	C.0711	0.0715	C.0697	C.07C4	0.0725	0.0760	0.0848
0.0853	C.0786	0.0812	0.0864	C.0936	0.0942	0.0958	C.1060
0.1120	C.1169	0.1182	0.1118	C.1076	0.1063	0.1108	0.1181
0.1166	C.1184	0.1185	0.1134	C.1093	0.1091	0.1148	0.1100
0.1082	C.1C71	0.1080	0.1123	C.1175	0.1171	0.1146	0.1120
0.1135	C.1162	0.1186	0.1197	C.1170	0.1158	0.1099	C.1054
0.1096	C.1120	0.1124	0.11C4	C.1022	0.1030	0.1015	0.1001
0.1004	C.0963	0.0976	0.0983	C.0967	0.0930	0.0929	C.0882
0.0892	C.0880	0.0850	C.0818	C.0844	0.0812	0.0765	0.0740
0.0754	C.0736	0.0732	0.0715	C.0691	0.0656	0.0622	0.0635
0.0618	C.0597	0.0565	0.0565	C.0553	0.0539	0.0555	0.0567
0.0500	C.0505	0.0472	0.0465	C.0466	0.0474	0.0467	0.0459
0.0424	C.0447	0.0491	0.0462	C.0454	0.0459	0.0466	0.0458
0.0404	C.0422	0.0453	0.0465	C.0450	C.0452	0.0524	0.0545
0.0570	C.0613	0.0651	0.0651	C.0638	0.0647	0.0705	0.0761
0.0724	C.0694	0.0691	0.07C9	C.0745	0.0742	0.0782	C.0772
0.0735	C.0739	0.0759	0.0838	C.09C3	0.0948	0.0913	0.0824
0.0810	C.0859	0.0908	0.0876	C.0938	0.1042	0.1113	0.1144
0.1136	C.1110	0.1084	0.1072	C.1135	0.1202	0.1245	C.1237
0.1191	C.1139	0.1109	0.1087	C.1064	0.1067	0.1103	0.1140
0.1160	C.1158	0.1107	0.1113	C.1137	0.1159	0.1155	0.1132
0.1130	C.1151	0.1181	0.1219	C.1213	0.1155	0.1116	0.1175

ARRAY OF PRESSURE COEFFICIENTS -- FILE - W54504

0.1110	C.1C79	0.1C91	0.1C51	C.1019	0.0998	0.0949	0.0903
0.0877	C.0868	0.0860	0.0857	C.0822	0.0778	0.0716	C.0694
0.0679	C.0673	0.0641	0.0587	C.0555	0.0544	0.0489	0.0470
0.0440	C.0412	0.0378	0.0349	C.0345	0.0304	0.0246	C.0230
0.0213	C.0221	0.0158	0.0129	C.0110	0.0097	0.0073	C.0056
0.0059	C.0017	-.0001	-.0021	-.0044	-.0065	-.0057	-.0062
-.0050	-.0092	-.0079	-.0092	-.0095	-.0142	-.0095	-.0048
-.0010	-.0035	-.0041	0.0022	C.0156	0.0197	0.0237	0.0276
0.0268	C.0274	0.0365	0.0442	C.0478	0.0548	0.0597	0.0563
0.0545	C.0640	0.0703	0.0734	C.0715	0.0704	0.0758	C.0793
0.0815	C.0818	0.0743	0.0740	C.0757	C.0805	0.0850	0.0890
0.0895	C.0867	0.0859	0.0895	C.0955	0.0972	0.0996	0.1064
0.1122	C.1161	0.1139	0.1092	C.1085	C.1106	0.1146	C.1205
0.1194	C.1214	0.1232	0.1211	C.1144	0.1146	0.1195	0.1184
0.1165	C.1150	0.1150	0.1185	C.1212	0.1212	0.1190	0.1148
0.1164	C.1209	0.1205	0.1185	C.1167	0.1174	0.1095	C.1089
0.1089	C.1099	0.1034	0.0999	C.0975	0.0966	0.0968	0.0945
0.0886	C.0846	0.0827	0.0830	C.0817	0.0802	0.0770	C.0711
0.0716	C.0666	0.0644	0.0612	C.0613	0.0590	0.0545	0.0507
C.0508	C.0469	0.0472	0.0448	C.0425	0.0419	0.0365	0.0366
0.0350	C.0326	0.0310	0.0284	C.0305	0.0261	0.0291	0.0276
0.0283	C.0236	0.0208	0.0262	C.0236	0.0214	0.0252	0.0237
0.0240	C.0235	0.0288	0.0262	C.0286	0.0248	0.0270	C.0267
0.0261	C.0250	0.0288	0.0340	C.0363	0.0402	0.0479	C.0523
0.0499	C.0505	0.0510	0.0509	C.0530	0.0581	0.0634	0.0687
0.0687	C.0735	0.0754	0.0729	C.0706	0.0731	0.0728	C.0720
0.0722	C.0741	0.0779	0.0833	C.0858	C.0877	0.0917	0.0904
0.0885	C.0950	0.0930	0.0901	C.0937	0.1012	0.1055	0.1061
0.1062	0.1058	0.1094	0.1086	C.1114	0.1190	0.1215	C.1218
0.1202	C.1163	0.1178	0.1152	C.1137	0.1135	0.1173	0.1174
0.1184	C.1205	0.1172	0.1198	C.1200	0.1219	0.1186	0.1187
0.1189	C.1127	0.1139	0.1173	C.1172	0.1165	0.1154	0.1163

ARRAY OF PRESSURE COEFFICIENTS -- FILE - W54505

0.1061	C.1C78	0.0988	0.1025	C.10C5	0.0950	0.0882	C.0812
0.0738	C.0726	0.0711	0.0652	C.0549	0.0500	0.0494	C.0447
0.0350	C.0320	0.0295	0.0282	C.0227	0.0193	0.0105	0.0012
-.0002	C.0C07	-.0037	-.0064	-.0075	-.0097	-.0173	-.0233
-.0227	-.0227	-.0314	-.0362	-.0373	-.0347	-.0369	-.0378
-.0401	-.0452	-.0482	-.0487	-.0472	-.0497	-.0457	-.0504
-.0513	-.0547	-.0525	-.0460	-.0449	-.0453	-.0465	-.0529
-.0460	-.0338	-.0162	-.0057	C.0017	0.0112	0.0211	0.0241
0.0242	C.0277	0.0398	0.0514	C.0623	0.0556	0.0510	C.0501
0.0569	C.0660	0.0736	0.0792	C.0784	C.0773	0.0820	0.0842
0.0860	C.0870	0.0799	0.0808	C.0854	0.0809	0.0870	0.0911
0.0952	C.0991	0.0956	0.0934	C.0965	0.0993	0.1041	0.1020
0.1060	C.1C89	0.1C87	0.1C81	C.1148	0.1139	0.1156	0.1165
0.1161	C.1163	0.1223	0.12C3	C.1181	0.1183	0.1203	0.1259
0.1233	C.1240	0.1217	0.1236	C.1193	0.1163	0.1214	C.1156
0.1181	C.1245	0.1161	0.113C	C.1122	0.1145	0.1148	0.1131
0.1059	C.1C66	0.1031	0.0956	C.0920	0.0893	0.0800	C.0756
0.0724	C.0704	0.0631	0.06C7	C.06C1	0.0628	0.0551	C.0484
0.0473	C.0363	0.0349	0.0312	C.0293	0.0272	0.0245	0.0190
0.0177	C.0C94	0.0116	0.0076	C.0058	-.0004	0.0034	C.0CC9
-.0019	-.0C24	-.0C09	-.0064	-.01C3	-.0096	-.0110	-.0119
-.0107	-.0C97	-.0110	-.0063	-.0032	-.0013	-.0003	-.0019
-.0021	-.0C11	0.0049	0.0035	C.01C9	0.0092	0.0023	C.0063
0.0125	C.0183	0.0235	0.02C6	C.0256	0.0379	0.0392	C.0404
0.0419	C.0361	0.0294	0.0294	C.0365	0.0500	0.0529	0.0559
0.0639	C.0686	0.0697	0.0599	C.0630	0.0707	0.0863	C.0900
0.0871	C.0864	0.0851	0.0814	C.0784	0.0765	0.0826	0.0920
0.1015	C.0988	0.0931	0.0947	C.0938	0.0962	0.0915	0.0985
0.1038	C.1C78	0.1C78	C.11C3	C.1044	0.1115	0.1114	0.1138
0.1152	C.1148	0.1249	0.1223	C.1269	0.1200	0.1231	0.1179
0.1154	C.1227	0.1234	0.1289	C.1245	0.1272	0.1194	0.1239
0.1269	C.1280	0.1272	C.12C3	C.1222	0.1159	0.1197	0.1126

ARRAY OF PRESSURE COEFFICIENTS -- FILE - W54506

0.1026	C.0906	0.0844	0.0718	C.0674	0.0616	0.0538	0.0452
0.0363	C.0283	0.0277	C.0202	C.0097	-.0009	-.0026	-.0110
-.0135	-.0198	-.0216	-.0262	-.0367	-.0438	-.0441	-.0520
-.0523	-.0602	-.0656	-.0699	-.0726	-.0740	-.0802	-.0817
-.0881	-.0925	-.0926	-.0903	-.0949	-.1021	-.1053	-.1076
-.1051	-.1074	-.1015	-.0971	-.0956	-.1077	-.1118	-.1106
-.1066	-.1009	-.0934	-.0864	-.0832	-.0824	-.0821	-.0860
-.0620	-.0156	0.0257	0.0371	C.0372	0.0370	0.0281	C.0300
0.0398	C.0504	0.0610	0.0707	C.0785	0.0782	0.0755	C.0769
0.0756	C.0741	0.0722	0.0706	C.0697	C.0746	0.0766	0.0738
0.0740	C.0812	0.0915	0.1023	C.1144	0.1174	0.1287	0.1310
0.1204	C.1211	0.1264	0.1317	C.1368	0.1391	0.1378	0.1366
0.1376	C.1341	0.1302	0.1247	C.1295	0.1378	0.1459	0.1441
0.1490	C.1449	0.1515	0.1548	C.1557	0.1523	0.1513	0.1540
0.1560	C.1524	0.1511	0.1540	C.1552	C.1519	0.1457	0.1431
0.1403	C.1410	0.1323	0.1158	C.1138	0.1092	0.1024	0.0996
0.0967	C.0812	0.0766	0.0676	C.0644	0.0587	0.0514	C.0405
0.0344	C.0264	0.0228	0.0185	C.0171	0.0088	0.0032	-.0012
-.0067	-.0077	-.0131	-.0206	-.0179	-.0275	-.0251	-.0288
-.0330	-.0330	-.0396	-.0323	-.0390	-.0467	-.0415	-.0475
-.0514	-.0433	-.0424	-.0512	-.0468	-.0446	-.0422	-.0389
-.0399	-.0371	-.0341	-.0391	-.0327	-.0361	-.0273	-.0174
-.0081	-.0070	-.0191	-.0293	-.0286	-.0169	-.0014	0.0128
0.0253	C.0364	0.0363	0.0329	C.0345	0.0394	0.0419	0.0422
0.0385	C.0397	0.0510	0.0540	C.0552	0.0539	0.0487	C.0551
0.0563	C.0654	0.0593	0.0548	C.0505	C.0602	0.0619	0.0652
0.0752	C.0831	0.0962	0.1057	C.1091	0.1236	0.1302	0.1365
0.1364	C.1369	0.1302	0.1278	C.1320	0.1271	0.1306	0.1339
0.1358	C.1353	0.1264	0.1259	C.1293	0.1387	0.1419	0.1385
0.1384	C.1490	0.1575	0.1568	C.1556	0.1544	0.1507	0.1528
0.1543	C.1564	0.1586	C.1608	C.1564	0.1550	0.1512	0.1532
0.1425	C.1385	0.1377	C.1413	C.1327	0.1266	0.1267	0.1199

ARRAY CF PRESSURE CCEFFICIENTS -- FILE - W54507

0.1615	C.1188	0.1209	0.11C5	C.0983	0.0864	0.0751	C.0664
0.0550	C.0447	0.0288	0.02C9	C.0066	-.0037	-.0104	-.0099
-.0111	-.0246	-.0345	-.0441	-.0546	-.0530	-.0598	-.0665
-.0726	-.0714	-.0774	-.0778	-.0873	-.0853	-.0876	-.0891
-.0893	-.0890	-.0894	-.0940	-.0878	-.0896	-.0915	-.0863
-.0846	-.0798	-.0863	-.0852	-.0760	-.0746	-.0732	-.0663
-.0645	-.0605	-.0472	-.04C3	-.03C7	-.0100	0.0082	C.0267
C.05C4	C.0608	0.0603	0.0621	C.0715	0.0812	0.0916	0.1023
0.1181	C.1225	0.1190	0.1156	C.12C6	0.1325	0.1434	0.1545
0.1611	C.1600	0.1553	C.15C3	C.1510	0.1444	0.1420	0.1439
0.1491	C.1540	0.1431	0.1458	C.1531	0.1587	0.1571	0.1695
0.1713	C.1766	0.1720	0.171C	C.1767	0.1840	0.1789	C.1845
0.1836	C.1878	0.1947	0.2046	C.2086	0.2119	0.2180	0.2202
0.2227	C.2282	0.2271	0.23C0	C.2327	0.2353	0.2373	C.2366
0.2361	C.2391	0.2423	0.2454	C.2431	0.2365	0.2283	C.2271
0.2267	C.2178	0.2C36	0.19C6	C.1855	0.1703	0.1556	0.1418
0.1381	C.1267	0.1128	0.0929	C.0883	0.0791	0.0604	C.0568
0.0484	C.0386	0.0304	0.0238	C.0127	0.0079	0.0066	0.0010
-.0058	-.0139	-.0139	-.02C9	-.0209	-.0302	-.0276	-.0348
-.0318	-.0257	-.0296	-.0226	-.0251	-.0198	-.0274	-.0280
-.0246	-.0204	-.0242	-.0168	-.0181	-.0179	-.0170	-.0224
-.0164	-.0136	-.0106	-.0059	C.0030	0.0171	0.0225	C.0130
0.0088	C.0C82	0.0157	0.033C	C.0372	0.0370	0.0334	C.0381
0.0485	C.0588	0.0570	0.0697	C.0817	0.0806	0.0784	0.0854
0.0837	C.0862	0.0966	0.1073	C.1078	0.1036	0.1033	0.1056
0.1173	C.1156	0.1147	0.1211	C.1277	0.1343	0.1370	0.1376
0.1405	C.1468	0.1474	0.1524	C.1463	0.1516	0.1570	0.1550
0.1599	C.1646	0.1588	0.1628	C.1689	0.1759	0.1874	0.1890
0.1839	C.1931	0.2C39	C.2C5C	C.1976	0.2035	0.2117	0.2147
0.2139	C.2193	0.2286	0.2252	C.2278	0.2320	0.2328	0.2416
0.2417	C.2462	0.2365	0.2348	C.2369	0.2450	0.2429	C.2359
0.2278	C.2302	0.2320	0.2213	C.2164	0.2037	0.1848	0.1679

ARRAY OF PRESSURE COEFFICIENTS -- FILE - W5450E

0.0448	C.0411	0.0075	0.0051	-.0113	-.0278	-.0352	-.0386
-.0577	-.0723	-.0855	-.0809	-.0887	-.1106	-.1155	-.1154
-.1237	-.1262	-.1332	-.1384	-.1434	-.1409	-.1494	-.1522
-.1562	-.1623	-.1603	-.1631	-.1661	-.1615	-.1657	-.1577
-.1600	-.1606	-.1514	-.1532	-.1588	-.1499	-.1434	-.1396
-.1365	-.1344	-.1245	-.1155	-.1159	-.1087	-.1143	-.0997
-.0623	-.0381	-.0242	-.0201	-.0137	0.0036	0.0298	0.0469
0.0573	C.0605	0.0714	0.0854	C.0844	0.0809	0.0803	0.0969
0.1136	C.1289	0.1269	0.1289	C.1366	0.1443	0.1432	0.1495
0.1389	C.1251	0.1304	0.1386	C.1463	0.1484	0.1448	0.1425
0.1535	C.1584	0.1552	0.1678	C.1750	0.1779	0.1797	0.1866
0.1988	C.1993	0.1912	0.1974	C.1996	0.2143	0.2109	0.2138
0.2068	C.2233	0.2371	0.2482	C.2485	0.2568	0.2650	0.2696
0.2848	C.2811	0.2894	0.2965	C.3100	0.3166	0.3256	0.3343
0.3358	C.3308	0.3243	0.3176	C.3128	0.2850	0.2701	0.2550
0.2372	C.2131	0.1863	0.1592	C.1403	0.1033	0.0795	0.0580
0.0381	C.0192	0.0137	-.0044	-.0051	-.0185	-.0348	-.0400
-.0438	-.0488	-.0532	-.0603	-.0644	-.0674	-.0724	-.0749
-.0745	-.0790	-.0842	-.0784	-.0817	-.0756	-.0835	-.0793
-.0783	-.0780	-.0740	-.0929	-.0901	-.0835	-.0801	-.0818
-.0837	-.0827	-.0806	-.0822	-.0742	-.0633	-.0648	-.0620
-.0509	-.0512	-.0445	-.0317	-.0064	0.0040	0.0108	C.0106
0.0236	C.0372	0.0398	0.0356	C.0323	0.0333	0.0371	0.0421
0.0492	C.0497	0.0530	0.0543	C.0553	0.0560	0.0538	0.0536
0.0599	C.0669	0.0852	0.0807	C.0818	0.1022	0.1269	0.1243
0.1243	C.1215	0.1323	0.1397	C.1457	0.1460	0.1594	0.1573
0.1478	C.1567	0.1664	0.1803	C.1821	0.1782	0.1716	0.1778
0.1842	C.1956	0.1873	C.1901	C.1928	C.1908	0.1907	0.2047
0.2151	C.2208	0.2214	0.2282	C.2259	0.2343	0.2443	0.2463
0.2660	0.2713	0.2827	0.2959	C.2999	0.3090	0.3189	C.3267
0.3317	C.3355	0.3362	0.3317	C.3210	0.3138	0.3158	C.3059
0.2798	C.2497	0.2212	0.1999	C.1811	0.1706	0.1693	0.1224

ARRAY OF PRESSURE COEFFICIENTS -- FILE - W54509

0.2184	C.1814	0.1757	0.1542	C.1317	0.1086	0.0867	0.0648
0.0326	C.0C94	-.0105	-.0317	-.0615	-.0875	-.1083	-.1182
-.1164	-.1299	-.1464	-.1559	-.1650	-.1747	-.1759	-.1762
-.1765	-.1745	-.1705	-.1633	-.1747	-.1818	-.1710	-.1483
-.1344	-.1294	-.1388	-.1358	-.1277	-.1259	-.1227	-.1049
-.0940	-.0826	-.0606	-.0142	C.0325	0.0684	0.0703	C.0521
0.0346	C.0372	0.0651	0.0840	C.0961	0.0955	0.0997	0.1077
0.1305	C.1314	0.1198	0.1193	C.1202	0.1237	0.1411	C.1504
0.1505	C.1366	0.1182	0.1240	C.1437	0.1664	0.1687	C.1682
0.1792	C.1675	0.1678	0.1670	C.1664	0.1802	0.1894	0.1775
0.1817	C.1867	0.1884	0.1897	C.1959	0.2061	0.2001	C.2049
0.2147	C.2085	0.2169	0.2213	C.2238	0.2279	0.2358	0.2435
0.2546	C.2612	0.2662	0.2718	C.2773	0.2798	0.2871	0.3023
0.3100	C.3142	0.3113	0.3181	C.3263	0.3161	0.3253	C.3219
0.3262	C.3190	0.3115	0.2967	C.2890	0.2858	0.2796	0.2799
0.2686	C.2615	0.2536	0.2420	C.2281	0.2198	0.1907	0.1682
0.1445	C.1448	0.1274	C.0969	C.0759	C.0570	0.0357	C.0201
0.0086	-.0C30	-.0199	-.0416	-.0656	-.0786	-.0898	-.1012
-.1081	-.1131	-.1131	-.119C	-.1132	-.1062	-.1102	-.1025
-.0862	-.0941	-.0939	-.09CC	-.0802	-.0759	-.0757	-.0621
-.0481	-.0341	-.0265	-.0227	-.0219	-.0265	-.0252	-.0219
-.0136	C.0C64	0.0110	0.0259	C.0233	0.0167	0.0252	C.0207
0.0214	C.0377	0.0552	0.0722	C.0678	0.0622	0.0567	0.0517
0.0486	C.0646	0.0784	0.0919	C.1049	0.1167	0.1163	0.1144
0.1298	C.1206	0.1163	0.1127	C.1210	0.1339	0.1416	C.1504
0.1615	C.1655	0.1685	0.1822	C.1853	0.1889	0.1875	0.1844
0.1915	C.1947	0.1965	0.1963	C.1937	0.2003	0.2089	0.2065
0.2150	C.2162	0.2197	0.2234	C.2277	0.2356	0.2406	C.2493
0.2441	C.2542	0.2543	0.2662	C.2685	0.2727	0.2922	0.3031
0.3093	C.3072	0.3186	0.3237	C.3205	0.3333	0.3356	C.3376
0.3472	C.3486	0.3522	0.3444	C.3443	0.3361	0.3315	0.3427
0.3380	C.3333	0.3289	0.3164	C.3007	0.3051	0.2784	0.2666

ARRAY OF PRESSURE COEFFICIENTS -- FILE - W54510

0.2845	C.2799	0.2802	0.2833	C.2756	0.2769	0.2813	0.2830
0.2888	C.2941	0.2897	0.2873	C.2947	0.2966	0.2949	C.2829
0.2814	C.2790	0.2695	0.2625	C.2512	0.2413	0.2203	C.1936
0.1727	C.1486	0.1082	0.0714	C.0485	0.0184	-.0079	-.0316
-.0519	-.0754	-.0740	-.0741	-.0710	-.0866	-.1135	-.1406
-.1620	-.1692	-.1481	-.1113	-.0793	-.0728	-.0758	-.0659
-.0559	-.0471	-.0385	-.0361	-.0340	-.0324	-.0375	-.0372
-.0281	-.0187	-.0117	-.0049	C.0105	0.0104	0.0098	C.0171
0.0250	C.0420	0.0574	0.0597	C.0637	0.0646	0.0696	0.0780
0.0866	C.0925	0.1027	0.1101	C.1154	0.1217	0.1282	0.1281
0.1391	C.1532	0.1585	0.1659	C.1592	0.1684	0.1726	C.1793
0.1849	C.1948	0.1934	C.1990	C.2093	0.2163	0.2164	0.2113
0.2150	C.2181	0.2211	0.2264	C.2250	0.2387	0.2403	C.2414
0.2453	C.2453	0.2495	0.2401	C.2460	0.2446	0.2464	0.2384
0.2400	C.2444	0.2518	0.2433	C.2481	0.2517	0.2473	0.2481
0.2494	C.2457	0.2527	0.2483	C.2503	0.2510	0.2510	0.2475
0.2527	C.2434	0.2499	0.2523	C.2571	0.2519	0.2511	0.2554
0.2710	C.2772	0.2715	0.2779	C.2758	0.2728	0.2786	0.2872
0.2838	C.2837	0.2856	0.2820	C.2691	0.2494	0.2310	C.2104
0.1988	C.1763	0.1431	0.0965	C.0629	0.0402	0.0243	0.0193
-.0021	-.0246	-.0435	-.0636	-.0838	-.1032	-.1179	-.1336
-.1316	-.1243	-.1296	-.1318	-.1266	-.1110	-.0972	-.0946
-.0936	-.0949	-.0939	-.0893	-.0738	-.0684	-.0562	-.0445
-.0460	-.0358	-.0161	0.0035	C.0144	0.0199	0.0280	0.0244
0.0285	C.0405	0.0529	0.0621	C.0637	0.0746	0.0856	0.0960
0.1010	C.1047	0.1055	0.1129	C.1286	0.1316	0.1328	0.1332
0.1372	C.1437	0.1557	0.1630	C.1646	0.1682	0.1741	0.1883
0.1955	C.1977	0.2041	0.1999	C.2063	0.2086	0.2162	0.2309
0.2345	C.2330	0.2270	0.2350	C.2398	0.2482	0.2476	C.2549
0.2559	C.2569	0.2609	0.2664	C.2694	0.2794	0.2803	C.2869
0.2839	C.2856	0.2917	0.2910	C.2902	0.2893	0.2873	0.2960
0.3017	C.2960	0.2913	0.2858	C.2914	0.2909	0.2886	C.2893

ARRAY CF PRESSURE CCEFFICIENTS -- FILE - W54511

0.2740	C.2688	0.2756	0.2745	C.2768	0.2812	0.2811	0.2811
0.2861	C.2832	0.2743	0.2696	C.2691	0.2762	0.2765	0.2758
0.2748	C.2719	0.2746	0.2748	C.2754	0.2793	0.2809	0.2871
0.2935	C.2974	0.3008	0.3095	C.3126	0.3134	0.3190	0.3219
0.3291	C.3304	0.3377	0.3402	C.3423	0.3449	0.3481	C.3476
0.3461	C.3463	0.3504	0.3461	C.3348	0.3195	0.2978	0.2760
0.2592	C.2456	0.2374	0.2184	C.2021	0.1877	0.1659	0.1472
0.1397	C.1330	0.1229	0.1127	C.1026	0.0985	0.1016	0.0973
0.0998	C.1029	0.1009	0.0971	C.1016	0.1221	0.1288	0.1227
0.1207	C.1229	0.1320	0.1366	C.1412	0.1461	0.1470	C.1522
0.1484	C.1418	0.1356	C.1357	C.1303	0.1316	0.1381	0.1444
0.1420	C.1351	0.1331	0.1398	C.1431	0.1418	0.1403	0.1395
0.1491	C.1554	0.1658	0.1726	C.1724	0.1830	0.1858	C.1921
0.2002	C.2061	0.2119	0.2176	C.2241	0.2306	0.2338	0.2338
0.2285	C.2288	0.2321	0.2402	C.2358	0.2358	0.2389	C.2374
0.2342	C.2290	0.2352	0.2372	C.2462	0.2479	0.2497	C.2516
0.2519	C.2579	0.2577	0.2622	C.2713	0.2743	0.2749	0.2734
0.2741	C.2725	0.2728	0.2759	C.2807	0.2809	0.2793	0.2778
0.2806	C.2793	0.2843	0.2869	C.2894	0.2975	0.3002	C.3029
0.3058	C.3116	0.3166	0.3236	C.3277	0.3331	0.3449	C.3470
0.3529	C.3480	0.3520	0.3517	C.3583	C.3603	0.3568	C.3558
0.3597	C.3572	0.3503	0.3414	C.3289	0.3124	0.2878	0.2746
0.2596	C.2426	0.2208	0.1987	C.1791	0.1598	0.1407	0.1263
0.1191	C.1131	0.1046	0.0884	C.0855	0.0830	0.0807	C.0778
0.0891	C.0992	0.1091	0.1184	C.1206	0.1165	0.1129	0.1222
0.1295	C.1317	0.1396	0.1462	C.1457	0.1432	0.1402	0.1355
0.1354	C.1453	0.1481	0.1401	C.1390	0.1393	0.1425	0.1466
0.1513	C.1525	0.1472	0.1475	C.1528	0.1593	0.1654	0.1687
0.1717	C.1826	0.1868	0.1904	C.1986	0.2065	0.2132	C.2190
0.2247	C.2339	0.2401	0.2495	C.2533	0.2521	0.2556	0.2594
0.2611	C.2583	0.2560	0.2588	C.2657	0.2648	0.2631	C.2670
0.2643	C.2575	0.2585	0.2579	C.2630	0.2676	0.2699	C.2773

ARRAY CF PRESSURE CCEFFICIENTS -- FILE - W54512

0.2281	C.2336	0.2293	0.2364	C.2468	0.2469	0.2549	0.2607
0.2663	0.2719	0.2764	0.2924	C.2988	0.2998	0.3039	C.3056
0.3138	C.3213	0.3225	0.3213	C.3251	0.3184	0.3196	0.3225
0.3198	C.3164	0.3173	0.3213	C.3196	0.3158	0.3159	C.3213
0.3266	C.3292	0.3327	0.3356	C.3384	0.3406	0.3405	C.3385
0.3403	C.3505	0.3546	0.3596	C.3610	0.3647	0.3654	0.3615
0.3605	C.3615	0.3624	0.3625	C.3625	0.3624	0.3579	C.3566
0.3607	C.3557	0.3493	C.3499	C.3481	C.3478	0.3404	0.3378
0.3357	C.3344	0.3266	0.3141	C.3012	0.2892	0.2682	0.2478
0.2278	C.2135	0.2056	C.1902	C.1745	0.1635	0.1591	C.1575
0.1494	C.1405	0.1350	0.1337	C.1363	0.1352	0.1294	0.1331
0.1422	C.1496	0.1571	0.1658	C.1797	0.1801	0.1749	0.1717
0.1815	C.1967	0.2007	0.2016	C.1936	0.1919	0.1882	C.1903
0.1929	C.1910	0.1864	0.1908	C.1881	0.1893	0.1942	0.1947
0.2049	C.2088	0.2092	0.2088	C.2084	0.2077	0.2122	0.2104
0.2105	C.2120	0.2192	0.2184	C.2255	0.2286	0.2341	0.2371
0.2396	C.2382	0.2478	0.2505	C.2548	0.2595	0.2650	0.2652
0.2712	C.2806	0.2922	0.3032	C.3084	C.3064	0.3124	C.3181
0.3187	C.3219	0.3281	0.3346	C.3307	0.3268	0.3275	0.3315
0.3349	C.3346	0.3323	0.3302	C.3344	0.3304	0.3298	0.3318
0.3311	C.3348	0.3320	C.3392	C.3385	0.3423	0.3412	0.3448
0.3440	C.3539	0.3564	0.3562	C.3594	0.3587	0.3618	0.3649
0.3636	C.3679	0.3744	0.3724	C.3618	0.3567	0.3594	C.3624
0.3614	C.3559	0.3480	0.3427	C.3494	0.3465	0.3411	0.3446
0.3385	C.3347	0.3223	0.3103	C.2983	0.2828	0.2649	0.2471
0.2383	C.2267	0.2083	0.1977	C.1907	0.1775	0.1711	0.1646
0.1529	C.1456	0.1434	0.1450	C.1500	0.1515	0.1519	0.1529
0.1594	C.1677	0.1783	0.1918	C.1955	0.2007	0.1978	C.2019
0.2050	C.2088	0.2072	0.2032	C.2038	0.2055	0.2075	C.2094
0.2045	C.2028	0.2066	0.2058	C.2048	0.2049	0.2132	0.2156
0.2160	C.2176	0.2205	0.2265	C.2293	0.2304	0.2372	0.2434
0.2439	C.2439	0.2446	0.2509	C.2552	0.2571	0.2512	0.2536

ARRAY CF PRESSURE COEFFICIENTS -- FILE - W54513

0.2342	C.2401	0.2426	0.25C7	C.2570	C.2606	0.2652	C.2740
0.2790	C.2843	0.2924	0.2994	C.3005	0.2993	0.2997	0.3015
0.3046	C.3105	0.3124	0.314C	C.3151	0.3147	0.3140	0.3161
0.3150	C.3105	0.3105	0.3137	C.3136	C.3110	0.3127	C.3138
0.3182	C.3182	0.3181	0.318C	C.3227	0.3237	0.3228	0.3229
0.3237	C.3284	0.3320	0.3324	C.3357	0.3344	0.3347	0.3314
0.3334	C.3311	0.3285	C.3255	C.3297	0.3321	0.3313	0.3285
0.3240	C.3243	0.3233	0.3193	C.3211	0.3210	0.3173	0.3164
0.3167	C.3187	0.3145	0.3112	C.3059	0.2974	0.2863	0.2760
0.2710	C.2629	0.2580	0.2525	C.2422	0.2371	0.2343	0.2287
0.2233	C.2220	0.2236	0.2196	C.2198	0.2172	0.2123	0.2121
0.2159	C.2230	0.2259	0.2297	C.2368	0.2363	0.2302	0.2323
0.2380	C.2464	0.2479	0.2489	C.2444	0.2450	0.2409	0.2415
0.2421	C.2428	0.2410	0.2430	C.2389	0.2410	0.2394	C.2405
0.2400	C.2307	0.2222	0.2172	C.2168	0.2167	0.2163	C.2164
0.2173	C.2193	0.2201	0.2177	C.2229	0.2289	0.2358	0.2381
0.2395	C.2458	0.2535	0.2613	C.2628	0.2705	0.2785	0.2853
0.2906	C.2921	0.3CC6	0.3C12	C.3041	C.3070	0.3086	0.3140
0.3166	C.3182	0.3172	0.3195	C.3212	0.3189	0.3183	C.3189
0.3228	C.3227	0.3211	0.3196	C.3237	0.3210	0.3201	C.3205
0.3200	C.3201	0.3209	0.3245	C.3247	0.3283	0.3273	0.3276
0.3289	C.3346	0.3334	0.3339	C.3335	0.3319	0.3371	C.3375
0.3339	C.3369	0.3390	C.339C	C.3327	C.3284	0.3292	C.3263
0.3235	C.3225	0.3229	0.3252	C.3270	0.3246	0.3239	0.3244
0.3240	C.3210	0.3150	0.313C	C.3113	0.3018	0.2892	0.2791
0.2769	C.2699	0.2602	0.2575	C.2531	0.2436	0.2407	0.2379
0.2328	C.2298	0.2275	0.2262	C.2262	0.2264	0.2276	0.2284
0.2296	C.2333	0.2368	0.2410	C.2459	C.2471	0.2479	0.2487
0.2537	C.2521	0.2532	0.25C5	C.25C7	0.2512	0.2514	0.2512
0.2493	C.2459	0.2464	0.2458	C.2453	0.2484	0.2479	C.2435
0.2444	C.2452	0.2410	0.2352	C.2345	0.2374	0.2398	0.2363
0.2363	C.2389	0.2428	0.2456	C.2466	0.2475	0.2496	0.2549

ARRAY OF PRESSURE COEFFICIENTS -- FILE - W54514

0.2403	C.2467	0.2559	0.2649	C.2672	0.2743	0.2810	0.2873
0.2905	C.2967	0.3031	0.3064	C.3021	0.2989	0.2954	0.2943
0.2954	C.2997	0.3038	0.3068	C.3050	0.3015	0.2985	C.2998
0.3024	C.3047	0.3038	0.3061	C.3076	0.3061	0.3095	0.3135
0.3098	C.3073	0.3073	0.3076	C.3071	0.3068	0.3051	0.3073
0.3071	C.3063	0.3094	0.3051	C.3045	0.3042	0.3041	C.3014
0.3063	C.3084	0.3042	0.2991	C.2968	0.2959	0.2948	0.2889
0.2874	C.2928	0.2973	0.2962	C.2940	0.2942	0.2942	C.2984
0.2976	C.3031	0.3024	0.3024	C.3027	0.3057	0.3043	C.3108
0.3143	C.3123	0.3105	0.3079	C.3099	0.3107	0.3095	0.3116
0.3057	C.3035	0.3024	0.3055	C.3034	0.2992	0.2952	C.2931
0.2896	C.2908	0.2946	0.2936	C.2939	C.2924	0.2919	0.2960
0.2945	C.2962	0.2950	0.2962	C.2953	0.2981	0.2935	0.2944
0.2914	C.2945	0.2957	0.2953	C.2940	C.2927	0.2914	C.2864
0.2751	C.2627	0.2496	0.2367	C.2301	0.2256	0.2204	0.2145
0.2140	C.2121	0.2142	0.2171	C.2203	0.2291	0.2375	C.2392
0.2394	C.2440	0.2541	C.2645	C.2707	0.2814	0.2920	C.2994
0.3029	C.3037	0.3090	0.3113	C.3153	0.3148	0.3128	0.3098
0.3144	C.3146	0.3115	0.3090	C.3117	0.3110	0.3090	C.3063
0.3107	C.3108	0.3078	0.3091	C.3131	0.3116	0.3105	0.3093
0.3088	C.3133	0.3098	0.3098	C.3109	0.3143	0.3135	C.3104
0.3138	C.3153	0.3104	0.3116	C.3076	0.3050	0.3073	C.3057
0.3041	C.3059	0.3036	0.3056	C.3036	0.3000	0.3014	0.2982
0.2931	C.2946	0.2977	0.2970	C.2995	0.3027	0.3068	0.3091
0.3094	C.3072	0.3078	0.3066	C.3108	C.3109	0.3134	C.3111
0.3156	C.3132	0.3122	0.3173	C.3156	0.3098	0.3075	0.3112
0.3082	C.3053	0.3056	0.3074	C.3025	0.3012	0.2975	C.2985
0.2999	0.2989	0.3000	0.3017	C.3041	0.3034	0.2979	0.2955
0.2948	C.2954	0.2992	0.2979	C.2987	0.2969	0.2931	0.2930
0.2941	C.2891	0.2862	0.2862	C.2859	0.2848	0.2827	C.2786
0.2727	C.2648	0.2541	0.2440	C.2397	0.2354	0.2312	0.2291
0.2287	C.2339	0.2372	0.2403	C.2382	0.2379	0.2480	C.2562

ARRAY OF PRESSURE COEFFICIENTS -- FILE - W54515

0.2755	C.2803	0.2874	0.2946	C.2990	0.3018	0.3049	0.3112
0.3158	C.3192	0.3201	0.3222	C.3237	0.3207	0.3189	C.3189
0.3198	C.3211	0.3215	0.3271	C.3279	0.3252	0.3241	C.3254
0.3274	C.3300	0.3285	0.3279	C.3282	0.3301	0.3324	0.3320
0.3303	C.3285	0.3285	0.3288	C.3245	0.3241	0.3241	C.3256
0.3236	C.3215	0.3222	0.3203	C.3238	0.3240	0.3230	C.3232
0.3240	C.3259	0.3237	0.3204	C.3161	0.3169	0.3183	0.3157
0.3145	C.3184	0.3189	0.3167	C.3147	0.3140	0.3142	C.3166
0.3186	C.3205	0.3220	0.3211	C.3162	0.3170	0.3176	0.3222
0.3229	C.3222	0.3216	C.3204	C.3218	0.3242	0.3257	C.3252
0.3237	C.3203	0.3223	0.3250	C.3240	0.3227	0.3175	C.3164
0.3134	C.3135	0.3153	0.3116	C.3098	0.3102	0.3048	0.3035
0.3033	C.3016	0.2971	0.2954	C.2946	0.2962	0.2929	C.2923
0.2933	C.2941	0.2953	C.2984	C.2991	0.2979	0.2935	0.2938
0.2909	C.2840	0.2722	0.2627	C.2606	0.2594	0.2584	0.2567
0.2551	C.2587	0.2588	0.2593	C.2631	0.2675	0.2713	0.2739
0.2742	C.2811	0.2913	0.2961	C.3003	0.3086	0.3123	0.3174
0.3208	C.3230	0.3258	0.3269	C.3288	0.3307	0.3278	0.3295
0.3334	C.3312	0.3278	0.3294	C.3318	0.3327	0.3297	0.3291
0.3304	C.3340	0.3320	0.3325	C.3345	0.3336	0.3327	C.3308
0.3319	C.3320	0.3283	0.3293	C.3291	0.3294	0.3284	C.3269
0.3268	C.3287	0.3244	0.3214	C.3200	0.3212	0.3228	0.3242
0.3196	C.3180	0.3184	0.3211	C.3191	0.3181	0.3175	0.3171
0.3185	C.3201	0.3173	0.3185	C.3211	C.3204	0.3219	C.3204
0.3206	C.3215	0.3213	0.3194	C.3227	0.3224	0.3238	0.3201
0.3213	C.3230	0.3252	0.3276	C.3276	0.3241	0.3219	0.3238
0.3230	C.3222	0.3216	0.3237	C.3207	0.3191	0.3177	C.3168
0.3163	C.3158	0.3157	0.3155	C.3125	0.3139	0.3116	0.3103
0.3086	C.3022	0.2988	0.2954	C.2956	0.2931	0.2919	0.2937
0.2954	C.2955	0.2940	0.2923	C.2928	0.2930	0.2927	0.2904
0.2868	C.2786	0.2713	0.2693	C.2684	0.2673	0.2662	0.2663
0.2644	C.2679	0.2731	0.2775	C.2764	0.2737	0.2798	C.2856

ARRAY OF PRESSURE COEFFICIENTS -- FILE - W54516

0.3107	C.3140	0.3189	0.3243	C.3272	0.3294	0.3344	0.3351
0.3411	C.3416	0.3452	0.3446	C.3453	C.3425	0.3424	C.3461
0.3441	C.3426	0.3442	0.3475	C.3508	0.3489	0.3497	0.3510
0.3525	C.3553	0.3532	0.3568	C.3555	0.3540	0.3553	C.3505
0.3507	C.3498	0.3508	C.35CC	C.3420	0.3414	0.3431	C.3439
0.3402	C.3367	0.3350	0.3355	C.3373	0.3330	0.3343	0.3373
0.3417	C.3433	0.3431	0.3417	C.3419	0.3423	0.3418	0.3457
0.3459	C.3440	0.3406	0.3365	C.3353	C.3338	0.3343	0.3349
0.3365	C.3380	0.3366	0.3337	C.3297	0.3283	0.3308	0.3336
0.3316	C.3321	0.3327	0.3329	C.3336	0.3376	0.3420	C.3388
0.3417	C.3419	0.3423	0.3446	C.3447	0.3423	0.3399	0.3397
0.3372	C.3362	0.3360	0.3295	C.3256	0.3216	0.3177	C.3110
0.3121	C.3071	0.2992	0.2946	C.2939	0.2942	0.2922	C.2901
0.2912	C.2937	0.2950	0.3015	C.3030	0.3031	0.3023	C.3013
0.2965	C.2992	0.2948	0.2943	C.2937	0.2932	0.2924	0.2924
0.2962	C.2998	0.3032	0.3014	C.3058	0.3059	0.3051	C.3086
0.3132	C.3181	0.3235	0.3298	C.3299	0.3357	0.3399	0.3424
0.3387	C.3423	0.3427	0.3464	C.35C3	0.3537	0.3516	0.3491
0.3476	C.3479	0.3493	0.35C7	C.3520	0.3544	0.3504	0.3519
0.3549	C.3571	0.3561	0.3560	C.3560	0.3556	0.3550	C.3524
0.3549	C.3507	0.3469	C.3489	C.3474	0.3445	0.3433	0.3433
0.3398	C.3420	0.3384	0.3393	C.3383	0.3374	0.3408	0.3382
0.3352	C.3334	0.3333	0.3366	C.3346	0.3363	0.3337	C.3360
0.3367	C.3371	0.3370	0.3399	C.3375	0.3381	0.3371	0.3365
0.3361	C.3358	0.3348	0.3321	C.3345	0.3339	0.3341	0.3290
0.3306	C.3328	0.3353	0.3378	C.3396	C.3385	0.3362	C.3363
0.3404	C.3390	0.3377	C.34C0	C.3389	0.3370	0.3378	0.3321
0.3327	C.3327	0.3312	0.3293	C.3287	0.3244	0.3254	C.32C2
0.3148	C.3091	0.2984	C.2929	C.2926	0.2914	0.2907	0.2944
0.2968	C.2993	0.3019	0.2983	C.2997	0.3012	0.3026	0.3027
0.3009	C.2987	0.2965	0.2946	C.2971	0.2991	0.3012	C.3035
0.3002	C.3018	0.3090	0.31C3	C.31C3	0.3095	0.3116	0.3150

LIST OF REFERENCES

1. Shreeve, R. P., and others, Determination of Transonic Compressor Flow Field by Synchronized Sampling of Stationary Fast Response Transducers, paper presented at Symposium on Non-Steady Fluid Dynamics, ASME 1978 Winter Annual Meeting, San Francisco, California, December 1978.

2. Demo, W. J., Jr., Cascade Wind Tunnel for Transonic Compressor Blading Studies, M.S.A.E. Thesis, Naval Postgraduate School, Monterey, California, June 1978.

3. Volland, K. F., Jr., Transonic Cascade Wind Tunnel Modification and Initial Tests, M.S.A.E. Thesis, Naval Postgraduate School, Monterey, California, June 1980.

4. Eidelman, Shmuel, and others, Application of the Godunov Method and Higher Order Extension of the Godunov Method to Cascade Flow Modeling, paper presented at AIAA 6th Computational Fluid Dynamics Conference, AIAA-83-1941-CP, Danvers, Massachusetts, July 1983.

5. Simmons, J. M., and Shreeve, R. P., Data Acquisition and Analysis Techniques for Measurement of Unsteady Wall Pressures in a Transonic Compressor, NPS Report NPS-67sf77071, July 1977.

6. Geopfarth, R. N., Development of a Devise for the Incorporation of Multiple Scanivalves into a Computer Controlled Data System, M.S.A.E. Thesis, Naval Postgraduate School, Monterey, California, March 1979.

7. Paige, G. C., Measurement of Case Wall Pressure Signatures in a Transonic Compressor Using Real-Time Digital Instrumentation, M.S.A.E. Thesis, Naval Postgraduate School, Monterey, California, June 1976.

8. Hewlett-Packard Operating and Service Manual, Model 3455A Digital Voltmeter, HP03455-90002, June 1976.

9. Hewlett-Packard Operating and Service Manual, Analog-to-Digital Convertor, 5610A, HP05610-91999, January 1972.

10. West J. C., Digital Programmable Timing Device for Fast Response Instrumentation in Rotating Machines, M.S.A.E. Thesis, Naval Postgraduate School, Monterey, California, June 1976.

11. McCarville, P. A., Hardware and Software Improvements to a Paced Data Acquisition System for Turbomachines, M.S.A.E. Thesis, Naval Postgraduate School, Monterey, California, June 1981.

12. Hewlett-Packard Reference Manual, HP-21MX Computer Series HP02108-900002, June 1976.

13. Hewlett-Packard Operating and Service Manual, High Speed Acquisition Subsystem 2311A, HP02311-90003, March 1970.

14. Hewlett-Packard User's Manual, 7906 Disc Drive, HP07906-90901, 1978.

15. Cornell, D. W., Procedure for Synchronized Acquisition of Wall Pressures in a Transonic Compressor Using the HP-21MX, NPS Technical Note 83-01, September 1983.

16. Hewlett-Packard Reference Manual, RTE-IVB Programmer's Reference Manual, HP-92068-90004, October 1980.

17. IMSL Reference Manual, IMSL Library, International Mathmatical & Statistical Libraries, Inc., 1982.

18. ISSCO Reference Manual, DISSPLA Pocket Guide, Integrated Software Systems Corporation, San Diego, California, October 1981.

19. Zebner, H., Transonic Compressor: Program System TXCOO for Data Acquisition and On-Line Reduction, Contractor Report No. NPS67-80-02CR, October 1980.

20. Shreeve, R. P., Calibration of Flow Nozzles Using Traversing Pitot-Static Probes, NPS Technical Note 57sf73071A, July 1973.

21. McCracken, D. D., and Dorn, W. S., Numerical Methods and FORTRAN Programming, New York: Wiley & Sons, 1964, pp. 262-266.

22. Hewlett-Packard Reference Manual, DOS/RTE Relocatable Library, HP 24998-90001, July 1980 (Update 5 October 1981).

23. Hewlett-Packard User's Manual, HP-IB in HP1000 Computer Systems, HP 59310-90064, July 1980.

24. Holman, J. P., Experimental Methods for Engineers, New York: McGraw-Hill, 1978.

25. Hewlett-Packard User's Manual, HP2840A Graphics Plotting Software, HP 92840-90001, July 1980.

26. Arnold, M. J., and Fjelde, J. A., Preliminary Calibration of a Cascade Wind Tunnel, AE 3815 Laboratory Report, Department of Aeronautics, Naval Postgraduate School, Monterey, California, 23 September 1978.

INITIAL DISTRIBUTION LIST

		No. Copies
1.	Defense Technical Information Center Cameron Station Alexandria, Virginia 22314	2
2.	Library, Code 0142 Naval Postgraduate School Monterey, California 93943	2
3.	Department Chairman, Code 67 Department of Aeronautics Naval Postgraduate School Monterey, California 93943	1
4.	Director Turbopropulsion Laboratory Code 67sf Naval Postgraduate School Monterey, California 93943	10
5.	LCDR David W. Cornell, USN 1541 Canna Ct. Mountain View, California 94040	2
6.	Mr. George Derderian Naval Air System Command Code AIR-310E Department of the Navy Washington, D.C. 20360	1
7.	Commander (Attn. V. Lubosky) Naval Air Propulsion Center Trenton, New Jersey 08628	1

205506

Thesis
C75496 Cornell
c.1 Experimental determination of the relative flow at the tip of a transonic axial compressor rotor.

205506

Thesis
C75496 Cornell
c.1 Experimental determination of the relative flow at the tip of a transonic axial compressor rotor.

AMERICAN BINDERY
TOPEKA KANSAS

thesC75496
Experimental determination of the relati
3 2768 002 09173 8
DUDLEY KNOX LIBRARY