Calhoun: The NPS Institutional Archive

DSpace Repository

Theses and Dissertations | 1. Thesis and Dissertation Collection, all items

1952

Heat transfer problems in a low cost nuclear reactor

Berger, William Aaron

Oak Ridge School of Reactor Technology

https://hdl.handle.net/10945/24735

Downloaded from NPS Archive: Calhoun

http://www.nps.edu/library

Calhoun is the Naval Postgraduate School's public access digital repository for research materials and institutional publications created by the NPS community. Calhoun is named for Professor of Mathematics Guy K. Calhoun, NPS's first appointed -- and published -- scholarly author.

Dudley Knox Library / Naval Postgraduate School
411 Dyer Road / 1 University Circle
Monterey, California USA 93943

HEAT TRANSFER PROBLEMS IN A LOW COST NUCLEAR REACTOR

W. A. BERGER

THESIS
B43

Library
U. S. Naval Postgraduate School
Monterey, California

ORNL
CENTRAL FILES NUMBER
52-8-102

HEAT TRANSFER PROBLEMS

IN A

LOW COST NUCLEAR REACTOR

-

W. A. BERGER

HEAT TRANSFER PROBLEMS IN A LOW COST NUCLEAR REACTOR

by

William Aaron Berger
Lieutenant, United States Navy

Submitted in partial fulfillment
of the requirements
for the degree of
MASTER OF SCIENCE

Oak Ridge School of Reactor Technology
Oak Ridge, Tennessee
1952

Thesis
B43
c.1

PREFACE

The problem herein treated arose in conjunction with the design of a nuclear reactor proposed for use by various universities throughout the nation for research and training purposes.

The numerous phases of such a design are too large in magnitude for treatment by a single person. Accordingly, it was decided to assign various phases to individual members of the group engaged in the design.

This paper is concerned with the heat transfer in this reactor. The author chose this phase since it was most susceptible to declassification and in this case posed the most unique problem.

The author wishes to express his appreciation to Drs. R. J. Stephenson, W. M. Breazeale, and A. S. Thompson for their helpful assistance. It is also desired that appreciation be expressed to the other members of the Low Cost Reactor design group, Messrs. F. H. Abernathy, P. J. Sykes, L. H. Barrett, J. A. Dever, J. Maurer, and R. B. Mesler.

W. A. Berger

23 August 1952

TABLE OF CONTENTS

	Page
Preface	
Summary	1
Chapter I	
Introduction	7
Chapter II	
Heat Transfer and Safety Calculations	11
Bibliography	45

LIST OF ILLUSTRATIONS

	Page
Figure 1 - Three Dimensional View of Low Cost Reactor	2
Figure 2 - Fuel Elements for Low Cost Reactor	3
Figure 3 - Low Cost Reactor Schematic Drawing	4
Figure 4 - Vertical Cross Section of a Fuel Element	15
Figure 5 - Free Convection Boundary Layer Temperature and Velocity Profile	22
Figure 6 - Water Flow Diagram in Free Convection	24

SUMMARY

The Low Cost Reactor is a nuclear reactor about two feet high, one and one-fourth feet long, and one foot wide suspended in a pentagonal pool of water twenty seven feet long, twelve feet wide, and twenty six feet deep. The reactor is suspended from a movable bridge spanning the pool in a manner similar to that shown in Fig. 1.

The reactor itself is built of fuel elements one of which is shown in Fig. 2. These fuel elements are mounted in a 2S aluminum grid which in turn is suspended from the aforementioned bridge. Fig. 3 presents a schematic representation of the way in which the fuel elements are mounted in the grid.

Each fuel element is made up of five plates which are sandwiched plates of a 20 percent uranium-235 and aluminum alloy center portion and 2S aluminum cladding.

In accordance with the wishes of those interested in such a reactor, it was designed for two levels of heat output, 1000 KW and 100 KW.

The heat transfer problems associated with this design are as follows:

1. 1000 KW operation with forced circulation of the pool water through the reactor.
   a. Cooling water required, pump size, heat exchanger requirements.
   b. Temperature distribution in the cooling water and fuel plates.

NOT CLASSIFIED

DWG NO 10777

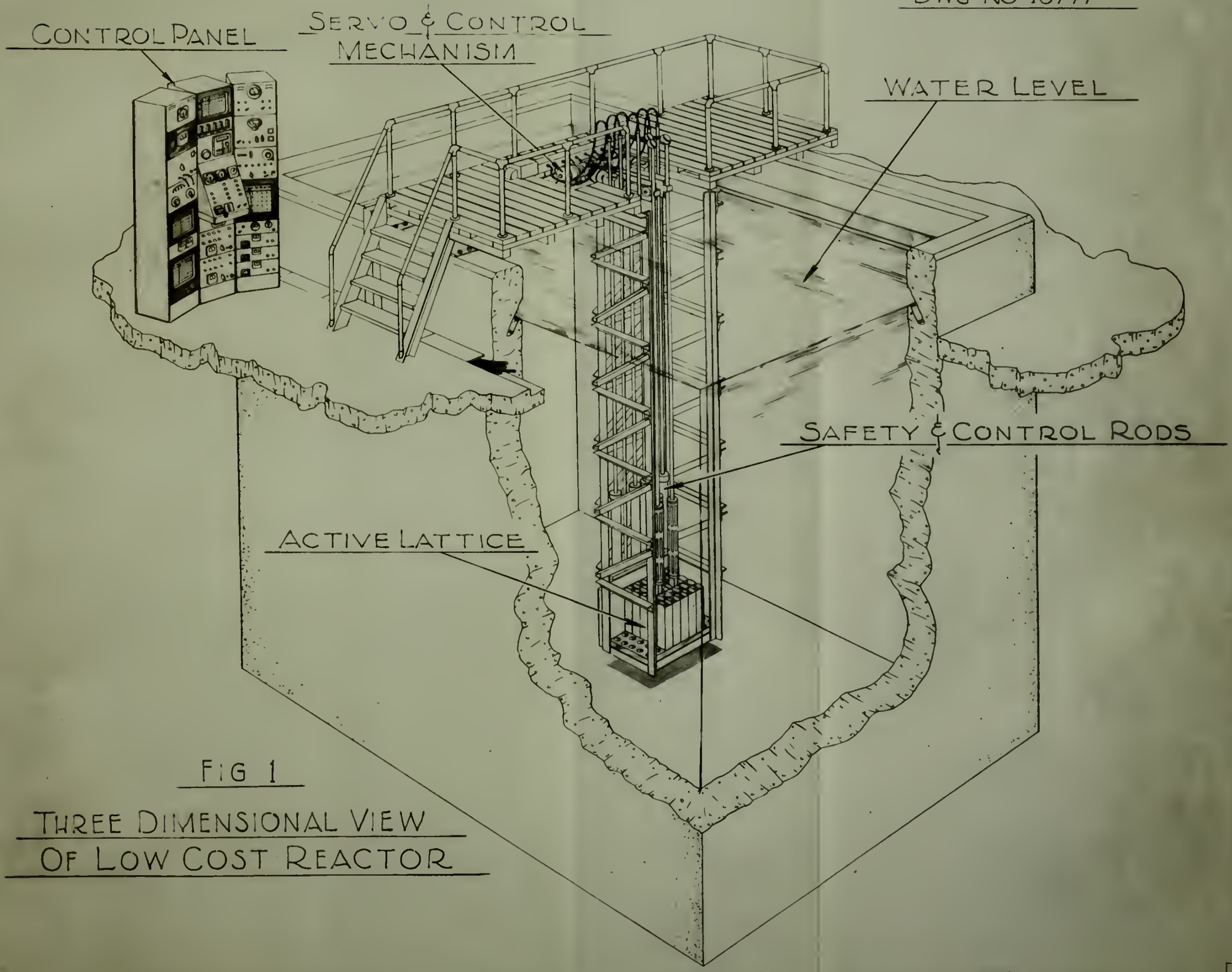

FIG 1

THREE DIMENSIONAL VIEW OF LOW COST REACTOR

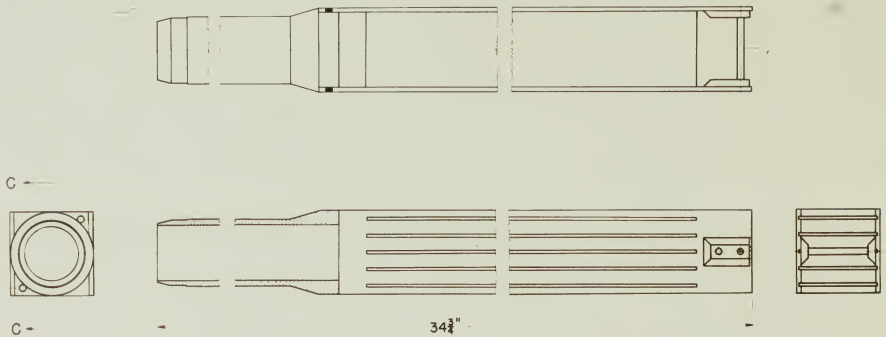

SECTION "C-C"

FUEL ELEMENT
for
LOW COST REACTOR

Fig 2

AUG 19 1552 S 5139

LOW COST REACTOR

SCHEMATIC DRAWING

FIG 3

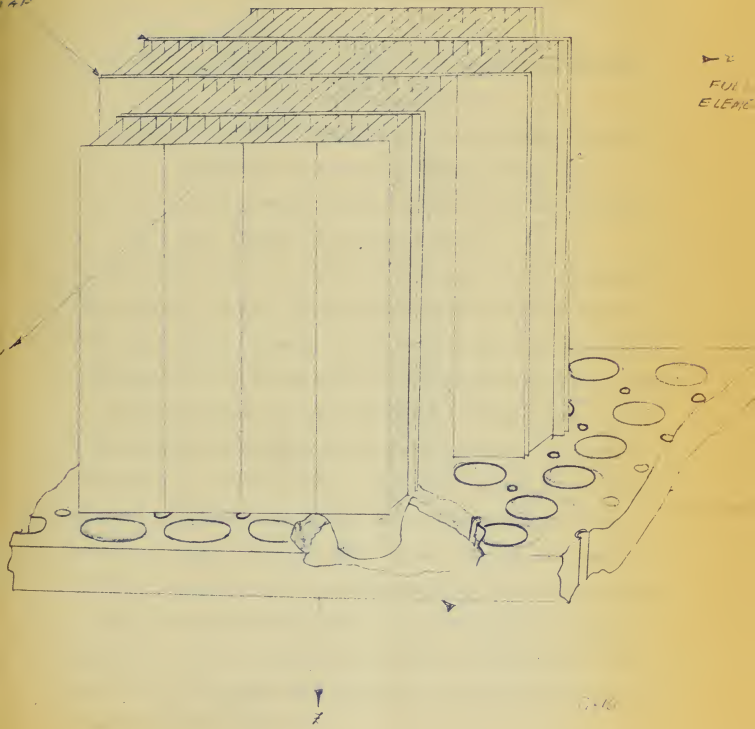

c. Power level at which boiling of the cooling water occurs for the above determined conditions.

2. 100 KW operation with free convection cooling.
   a. Temperature distribution in the cooling water.
   b. Power level at which boiling of the cooling water occurs.
   c. Equilibrium temperature of the pool and external cooling of pool water required.
3. Abnormal conditions brought about by sudden loss of water from the pool while running at power and resulting temperature distribution in the fuel elements as a function of time and position.

The first problem is a rather conventional one, the second and third, however, are not. The third problem seems at first glance to be of mere academic interest. In the event of some disaster such as an earthquake the conditions posed may be closely approximated, however.

In the first case, it was found that the maximum temperature at the fuel plate wall was 181.9 °F and the temperature of the center of the plate was only 183.1 °F. It was found that the cooling water would boil at a heat output of 1590 KW. A 1000 gallon per minute, 50 foot head pump is required and a heat exchanger 20 feet long and 19 inches in diameter, costing approximately 3400 dollars is required.

For the 100 KW operating level, it was found that the maximum temperature at the fuel plate wall was 146.3 °F if the pool is maintained at 80 °F by purging 64.9 gallons of pool water per minute and replacing with 70° F water.

It was found that if the conditions posed by the third problem occurred while operating at 1000 KW, the fuel elements nearest the center of the reactor would melt between 16 and 18.8 minutes after loss of water. If this condition occurred while operating at 100 KW the worst that could possibly happen would be for the fuel elements to reach the melting point some 11 hours after shutdown. The latter is a lower limit and it was found feasible to assume that they would not melt at all.

CHAPTER I

INTRODUCTION

The purpose of this chapter will be to present a concise, but necessarily, incomplete summary of the principles of a nuclear reactor, with special emphasis on how these principles effect the heat removal requirements.

A nuclear reactor may be envisioned as a "black box" in which there exists an "atmosphere" of neutrons. This is not a bad concept as may be seen from the fact that diffusion theory, often used with gases, is applied in the solution of problems appearing in elementary nuclear reactor theory.

Each neutron of this atmosphere has a certain probability of being elastically scattered, inelastically scattered, or absorbed by any elements which might be contained in this box. This probability is expressed as a hypothetical "cross-section" of an element for the particular process of interest. The absorption cross-section of an element is generally increased as the neutron kinetic energy is decreased. This increase is, in general, inversely proportional to the neutrons velocity. Therefore, if one desires that the neutron be absorbed in some substance, one provides some other substance which has the property of slowing down this neutron without absorbing it. This other substance is called the "moderator." In accordance with the laws of elastically scattered bodies, the nearer the scattering substance is to the scattered body in mass the more energy the scattered body is capable of giving up to that substance. Thus, the best moderator of neutrons would be one which most nearly approaches

the atomic mass of the neutron, namely, 1.00897 atomic mass units. This, of course, would be hydrogen.

One then asks, "What is the purpose of attempting to slow down a neutron with a moderator so that it may more readily be absorbed by some other substance?" The answer lies in the fact that some of the heavier elements undergo fission upon absorbing a neutron. This fissioning is a splitting of the atom which yields a large energy release, two lighter elements known as fission fragments, and may yield one or more neutrons. If this fission process yields one or more neutrons, these neutrons are capable of being moderated and in turn producing another fission thereby maintaining or increasing the fission rate depending on whether there is only one or more neutrons produced per fission. In the latter case a chain reaction is produced, that is an ever increasing fission rate is obtained. It is upon the latter that the nuclear chain reactor depends. Uranium 235, which produces about 2.5 neutrons per fission, is capable of maintaining such a chain reaction. One therefore desires that the "black box" contain a fissionable element such as uranium and a moderator.

Uranium 235 has a cross-section for fission which is some portion of its total absorption cross-section. This cross-section is largest for the smallest value obtainable for neutron velocity. Since the atoms of moderator are in thermal vibration, the neutrons cannot impart any more of their energy to the moderator atoms once they reach thermal velocities. The minimum neutron velocity is then the thermal velocity for the existing ambient temperature. The number of fissions per unit volume per unit time occurring as a result of

thermal neutron absorptions in uranium 235 is then the thermal cross-section, or probability, for such an absorption times the number of uranium 235 atoms per unit volume times the net number of neutrons of thermal energy crossing into the unit volume per unit area per unit time. This latter quantity is called the thermal flux.

It has been found that about 200 million electron volts of energy are released per fission. From this figure it can be shown that 3.1×10^{10} fissions per second produce a heat generation rate of one watt. Thus, it can be seen that the heat generation rate depends on the neutron flux. The neutron flux in turn is a function of position in the reactor. It is greatest in the center of the reactor, sloping off towards the edges due to neutron leakage through the reactor surface. This means, in turn, that the heat generation rate follows the same pattern. To produce a more uniform flux as well as to conserve neutrons, one may place a good moderator around the outside of the reactor thereby increasing the number of neutrons scattered back into the reactor and thereby decreasing the neutron leakage. The flux is thus flattened. The above arrangement around the reactor is called a reflector.

Non-fissioning absorbers are placed in the reactor so that they may be inserted or withdrawn and by absorbing, when in, or not absorbing, when out, they may maintain an equilibrium between thermal neutrons being produced and absorbed or by allowing an excess of neutrons to increase the fissioning rate. These absorbers are, physically, rods of absorber and are called control rods. These are generally placed in the center of the reactor and therefore tend to flatten the flux also.

The Low Cost Reactor is designed in the fashion stated of thin fuel plates between which water is maintained so that the hydrogen contained in the water may act as the moderator and so that the heat may be released to the water with the minimum temperature drop through the plates. The plates are clad to prevent the highly radioactive fission products from being released to the water thereby endangering the operating personnel and equipment. The surrounding pool water acts as a reflector. Some of the fuel plates are replaced with removable non-fissioning absorber which act as a control rod.

In order to maintain stability one does not wish to allow the water to boil, since this produces large fluctuations in density and consequently large fluctuations in moderating ability of the water.

These are the principles which govern the heat generation in the reactor and will thus be referred to many times in the following chapter.

CHAPTER II

HEAT TRANSFER ANALYSIS AND SAFETY CALCULATIONS

It is the purpose of this chapter to treat the problems involved in removing the heat generated in the reactor so that temperatures may be kept within the limits specified.

These problems will be treated individually in the three sections which follow.

2.1 1000 KW Operating Level, Forced Circulation Cooling.

The reactor will be cooled while operating at the 1000 KW level by drawing pool water through the reactor with a funnel which tapers into a four-inch line. The water is drawn through this arrangement and through a heat exchanger by a pump located on the inlet side of the heat exchanger. The water after leaving the heat exchanger is directed back into the pool.

The problems requiring solution for this configuration are:

a. The temperature rise of the cooling water between entrance and outlet of the reactor.

b. The temperature of the fuel plate walls and the center of the fuel plates.

c. Power level at which boiling of the cooling water first takes place.

d. Pumping rate and pressure drop throughout the entire system.

e. Heat exchanger requirements.

All of the above, of course, depend in some measure or entirely on the fluid velocity through the space between fuel plates. One must therefore solve for a velocity subject to the limits posed by the above

problems and by a further condition that turbulent flow must exist in the spaces between fuel plates. This latter requirement comes as a result of the known large temperature drops across the laminar boundary layer for forced circulation.

The arrangement of the fuel elements in the grid is shown in Fig. 3 with the system of coordinates established for this problem. Fig. 2 presents a detailed drawing of the fuel elements themselves. There are 18 active elements in the reactor.

In attacking the problem of finding the temperature rise of the water as it passes through the reactor it will be assumed that the rate of heat release per unit volume of the water in the cooling channels is constant over the reactor. This is not generally true in reactors but in this instance the normal curvature of the space-wise heat distribution is flattened by the presence of control rods in the center of the reactor. These control rods decrease the thermal flux in the center thereby decreasing the heat generated by the fission process.

The rate of heat release per unit volume or, as it is sometimes called, the power density is calculated by dividing the total power, 1000 KW, by the volume of water in the cooling channels. This was found to be 2.025×10^6 BTU/hr/ft^3. From this the power density per unit length of an individual channel is 1578 BTU/hr/in.

Since the velocity of flow through the reactor is essentially the independent variable in this problem, two values of flow velocity will be used in determining the temperature rise. These two values will be 1 and 2 feet per second.

The temperature of the cooling water at any point along a channel may be expressed:

$$T_m = T_i + \frac{p \times z}{C_p \times \gamma \times V \times 3600 \times A} \qquad (2.1.1)$$

where,

T_m = the mixed mean temperature of the water in the channel at a point z, °F

T_i = the temperature of the water as it enters the reactor, °F

p = power released per unit length of an individual channel, 1578 BTU/hr/in.

z = distance measured along the channel from the top of the reactor, in.

C_p = heat capacity of the water, 1 BTU/lb.-°F.

γ = weight density of the water, 62.4 lbs/ft^3

V = flow velocity of the water in feet per second

A = cross-sectional area of the channel, .00938 ft^3.

Substituting these values in equation (2.1.1) it is found that for a 1 ft/sec flow velocity T_m is given by:

$$T_m - T_i = .75z = 18.5° \text{ F rise across the reactor} \qquad (2.1.2)$$

and for 2 ft/sec by:

$$T_m - T_i = .375\ z = 9.25° \text{ F rise across the reactor} \qquad (2.1.3)$$

The mean fluid temperature has been established. One must now find the temperature rise through the thermal boundary layer or "film" as it is sometimes called and the temperature distribution in the fuel plates. These will be tied in with a boundary condition in the solution of the conduction equations in the fuel plate.

The following assumptions will be made in the solution to follow:

a. The temperature gradient in the z direction is sufficiently constant for one to assume that the second derivative of the temperature with respect to z is zero.

b. The y dependence will be neglected. Though erroneous, this leads to a conservative estimate since it is, in effect, assumed that there is no conduction in the y direction.

c. The steady state condition is the only one of interest in the problem.

d. Consistent with the assumption made in determining the temperature rise in the water, it will be assumed that the rate of heat generation per unit volume of the active portion of the plate is constant.

e. Thermal properties of the fluid and metal are constant over the range of temperatures encountered.

The problem will be set up as shown in Fig. 4.

The differential equation of conduction in the region 1 is:

$$\frac{d^2T_1}{dx^2} + \frac{S}{k_1} = 0 \qquad (2.1.4)$$

The differential equation of conduction in the region 2 is:

$$\frac{d^2T_2}{dx^2} = 0 \qquad (2.1.5)$$

where,

T = temperature at any point in region indicated by subscript

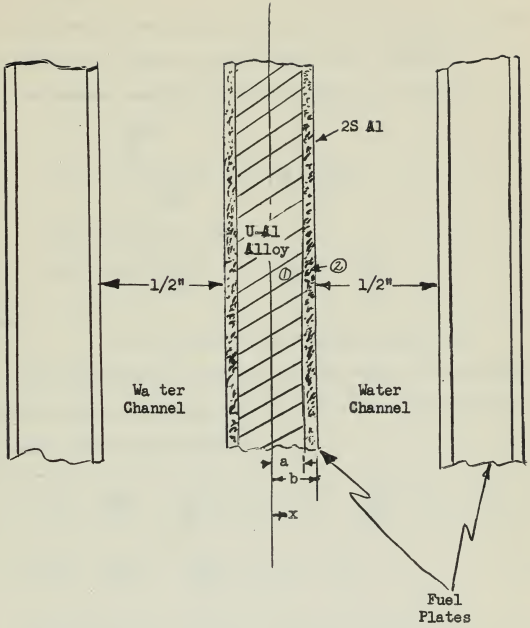

Fig. 4
Vertical Cross Section of
a Fuel Element

k = Thermal conductivity of the metal, BTU-ft/hr-°F-ft^2

S = Heat generation rate per unit volume of fuel-bearing layer.

The above are set equal to zero since it was postulated that the condition of interest was the steady state condition.

The boundary conditions for this problem are as follows.

(a) $\frac{d\,T_1(0)}{dx} = 0$

(b) $k_1 \frac{d\,T_1\,(a)}{dx} = k_2 \frac{d\,T_2\,(a)}{dx}$

(c) $T_1\,(a) = T_2\,(a)$

(d) $-k_2 \frac{d\,T_2\,(b)}{dx} = h\left(T_2\,(b) - T_m\right)$

where,

h = film drop or heat transfer coefficient

Solving equations (2.1.4) and (2.1.5) subject to the boundary conditions given it is found that the temperature distributions in the regions shown are as follows:

$$T_1 = T_m + \frac{Sa}{h} + \frac{Sa^2}{k_2}\left[\frac{b}{a} - 1\right] + \frac{Sa^2}{2k_1}\left[1 - \frac{x}{a}^2\right] \qquad (2.1.6)$$

$$T_2 = T_m + \frac{Sa}{h} + \frac{Sax}{k_2}\left[\frac{b}{x} - 1\right] \qquad (2.1.7)$$

Equations (2.1.6) and (2.1.7) express the temperature in their respective regions in terms of the independent variables x and z since the mean fluid temperature, T_m, is a function of z.

Values for the various constants in the above equations must now be found. The thermal conductivities are: k_1 = 101 BTU-ft/hr-°F-ft^2 and k_2 = 132 BTU-ft/hr-°F-ft^2 (Ref. 1). The source strength, S,

is found by dividing the total power (1000 KW) by the total fuel-bearing volume of the reactor. S is found to be 9740 BTU/hr-in^3. The value of the heat transfer coefficient through the film is found from the Colburn equation which is applicable to water:

$$\frac{hD}{k} = 0.023 \ (Re)^{0.8} \ (Pr)^{1/3} \qquad (2.1.8)$$

where,

D = the hydraulic diameter of the cooling passages = .0703 ft.

D = 4 x cross-sectional area/wetted perimeter of the passage.

k = thermal conductivity of the water, BTU-ft/hr-ft^2-°F = .354.

Re = Reynold's Number

Pr = Prandtl Number (Ref. 2) = 5.4.

From equation (2.1.8) and the determined constants the heat transfer coefficient for a flow velocity of 1 ft/sec is 256 BTU/hr-°F-ft^2. For a flow velocity of 2 ft/sec the heat transfer coefficient is 454 BTU/hr-°F-ft^2.

Assume an entrance temperature of 80 °F.

The dimension a is .030 in. and b is .05 in.

Substituting the above determined values in equations (2.1.6) and (2.1.7) together with the appropriate expressions for T_m from equations (2.1.2) and (2.1.3), it is found that the wall temperature (x = b) at the reactor outlet for 1 ft/sec flow velocity is 263.0 °F. The boiling point of water at this depth is 239 °F. It is apparent, therefore, that the 1 ft/sec flow velocity is not sufficient.

For a flow velocity of 2 ft/sec, the maximum wall temperature is found to be 181.9 °F at the reactor outlet. This is well below the boiling point and provides an adequate margin of safety. The flow velocity between plates will be established at 2 feet per second, this in turn will establish flow velocities and pressure drops throughout the system. The Reynold's Number corresponding to this flow velocity is 15,300.

Having established the wall temperature, equation (2.1.6) may be used to determine the maximum temperature in the fuel plate. This is found to be 183.1 °F. Thus there is only a 1.2 °F temperature rise in the plate. This may be attributed to the thinness of the plates and the high thermal conductivity of the aluminum. Thermal stress will certainly not be a problem in these plates.

To establish the power level at which boiling occurs the calculations are, in effect, reversed. That is the temperature at the wall is established at the boiling point for this depth of water, 239 °F, and the power density necessary to establish this temperature is determined. It is found by this method that the reactor will boil at a power level of 1590 KW.

The flow velocity has been determined. The pressure drop and the weight rate of flow of the water must now be calculated.

In calculating pressure drop the formulae for energy loss in passing through a restriction or an expansion from Ref. 3, were substituted in the general energy equation. The pressure drops were as follows:

For a flow velocity of 2 ft/sec, the maximum wall temperature is found to be 181.9 °F at the reactor outlet. This is well below the boiling point and provides an adequate margin of safety. The flow velocity between plates will be established at 2 feet per second, this in turn will establish flow velocities and pressure drops throughout the system. The Reynold's Number corresponding to this flow velocity is 15,300.

Having established the wall temperature, equation (2.1.6) may be used to determine the maximum temperature in the fuel plate. This is found to be 183.1 °F. Thus there is only a 1.2 °F temperature rise in the plate. This may be attributed to the thinness of the plates and the high thermal conductivity of the aluminum. Thermal stress will certainly not be a problem in these plates.

To establish the power level at which boiling occurs the calculations are, in effect, reversed. That is the temperature at the wall is established at the boiling point for this depth of water, 239 °F, and the power density necessary to establish this temperature is determined. It is found by this method that the reactor will boil at a power level of 1590 KW.

The flow velocity has been determined. The pressure drop and the weight rate of flow of the water must now be calculated.

In calculating pressure drop the formulae for energy loss in passing through a restriction or an expansion from Ref. 3, were substituted in the general energy equation. The pressure drops were as follows:

Entrance loss	0.00671	psi
Frictional loss through the reactor	0.0218	"
Exit loss	0.0673	"
Loss in contraction beneath the reactor	0.594	"
Friction, bend, and valve loss in the piping	8.75	"
Allowed heat exchanger loss	10.0	"
Total pressure drop	19.44	psi

The volumetric flow rate through the reactor elements is 757 gallons per minute. Leakage through the space between the fuel elements and then through the small holes amount to 17 gallons per minute. The total flow rate is thus 774 gallons per minute. The pump specified for the system is a 1000 gallon per minute, 50 foot head pump to allow for larger load requirements. No allowance was made for difference in head due to difference in elevation. Flow through unused holes is stopped by plugs.

The heat exchanger is to be a shell and tube, U-tube, water to water heat exchanger. The entrance temperature for the heated water was assumed to be 88 °F, allowing a drop of 1.25 °F between reactor exit and heat exchanger entrance. The exit temperature from the heat exchanger of the pool water was chosen as 80 °F. The cooling water entrance temperature was assumed to be 65° F and exit at 80° F. Based on heat exchanger data from Ref. 4 it was found that the system would require an exchanger 20 feet long and a 19 inch diameter shell. The conditions assumed above are conservative and the heat exchanger requirements for a location where, for example, there was better cooling

water would be less. Also, one might prefer to operate the pool at somewhat higher temperature in order to obtain better heat exchanger efficiency. The cost of the above heat exchanger is 3400 dollars.

Subject to the assumptions made, the requirements for a system operating at 1000 KW have been established.

2.2 100 KW Operating Level, Free Convection Cooling

Free convection cooling is in itself a very difficult problem if an exact solution is attempted. It requires the simultaneous solution of the equations of motion of a viscous fluid, the differential equation for continuity, and the differential equation of heat conduction in a moving substance.

In view of the above, it was decided to use a variation of the method described by Schwartz, Ref. 5. This consists, in essence, in determining the pressure drop through the reactor in terms of an unknown velocity and setting that pressure drop equal to the pressure head created by the buoyant force due to the difference in density which results, in turn, from temperature differences. The resulting equation is solved for the unknown velocity and the temperature rise across the reactor is derived therefrom.

The above method will be used to determine the overall flow through the reactor caused by the differences in temperature between the water in the reactor and the pool outside the reactor. The flow velocity thus obtained will be treated as a quasi-forced circulation through the reactor. A film drop will be postulated as in forced circulation but with the film drop coefficient being determined by

the free convection boundary layer rather than a boundary layer of the type found in forced circulation. This coefficient will be different since the free convection velocity profile appears as shown in Fig. 5. The shape of the boundary layer velocity profile results from the difference in temperature between the central stream of the channel and the particles of fluid in the boundary layer.

One is able to obtain the predicted wall temperature from the above procedure. This is, of course, the item of primary interest in such a problem since one does not wish the water to boil.

It should be pointed out that in this instance the flow of water will, of course, be from the bottom of the reactor upward. The origin of the z axis will therefore be taken from the bottom of the fuel elements.

In determining the bulk temperature of the water in the reactor the following assumptions will be made:

(1) All heat is removed by the water flowing in the spaces between fuel plates, i.e., no heat loss by conduction to the spaces between rows of fuel elements.

(2) The weight density is constant except in calculating buoyancy force.

(3) Steady state conditions.

(4) The water temperature entering the reactor is the same as the pool temperature.

(5) The pressure loss at the exit from the fuel elements is negligible.

(6) Power density in the water is constant.

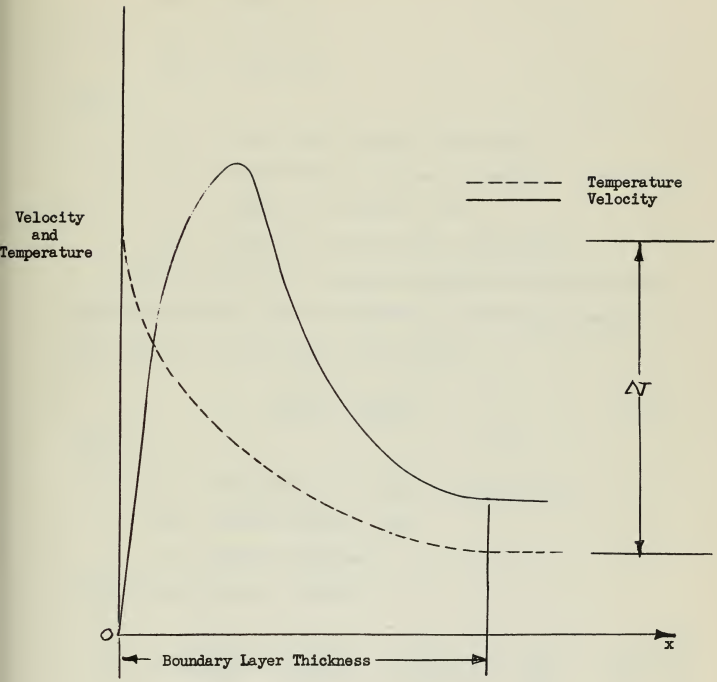

Fig. 5
Free Convection Boundary Layer
Temperature and Velocity Profile

Fig. 6 below will establish the nomenclature to be used in the following calculations. The numerical values of the areas indicated in Fig. 6 are:

A_o = 9.6 sq. in.

A_1 = 4.43 sq. in.

A_2 = 7.19 sq. in.

Let,

q = average power density in the water.

γ = weight density of the water, lbs/ft^3.

l = length of fuel plates, 25 in.

γ_o = density of the pool water, 62.4 lbs/ft^3.

Using the relations for pressure drop through contractions and expansions from Ref. 3 and the expression for frictional pressure drop along the passage between fuel elements,

$$\Delta p = \frac{4fl}{D} \quad \frac{\gamma_o V_2^2}{2g} \qquad (2.2.1)$$

where,

f = friction factor = 16/Re, for laminar flow.

Re = Reynold's Number = $V_2 D/\gamma$

D = hydraulic diameter.

the following relation is obtained:

$$\Delta p = -\gamma_o \left[\frac{K_o V_1^2}{2g} + \frac{V_1^2 - V_o^2}{2g}\right] - \gamma_o \left[\frac{V_1^2}{2g}\left(1 - \frac{A_1}{A_2}\right)^2 + \frac{V_2^2 - V_1^2}{2g}\right]$$

$$- 4\frac{fl}{D} \quad \frac{\gamma_o V_2^2}{2g} \qquad (2.2.2)$$

$K_o = 0.4\ (1.25 - A_1/A_o)$ (See Ref. 3).

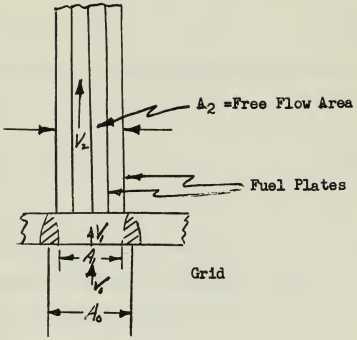

Fig. 6
Water Flow Diagram
In Free Convection

The first term in the above is the pressure drop between A_o and A_1, the second term is that between A_1 and A_2, and the third is the frictional pressure drop in the channel between fuel plates.

Employing the equation of continuity for an incompressible fluid,

$$A_o V_o = A_1 V_1 = A_2 V_2 \tag{2.2.3}$$

and substituting values for the various constants, (2.2.2) reduces to:

$$\Delta p = - (1.605 V_2^2 + .224 V_2) \tag{2.2.4}$$

Now the difference in density resulting from a change of temperature is expressed by:

$$\gamma_z = \gamma_o - \beta \gamma_o (T_z - T_o) \tag{2.2.5}$$

where,

γ_z = density at any point z in the reactor

β = thermal expansion coefficient for water = $10^{-4}/°F$

T_z = temperature of the water at point z, °F

T_o = pool water temperature, °F

Under the assumption that the power density in the water is constant, the temperature may be expressed as in equation (2.1.1) as follows:

$$T_z = T_o + \frac{q}{V_2 C_p} \int_o^z \frac{dz}{\gamma} \tag{2.2.6}$$

Though the weight density of the water varies with the temperature of the water and therefore with z this variation will be of such small magnitude that it will not effect, materially, the heat capacity,

$\gamma C_p V_2$, of the water. Therefore, assuming that the weight density is constant and equal to the density of the water in the pool, (2.2.6) becomes:

$$T_z - T_o = \frac{qz}{\gamma_o C_p V_2} \tag{2.2.7}$$

The pressure produced by the buoyant force in a small element of volume in the water passage is:

$$\frac{(\gamma_z - \gamma_o) A dz}{A} = -\gamma_o \beta (T_z - T_o) dz \tag{2.2.8}$$

Employing the equilibrium condition that the pressure drop through the reactor must equal the pressure head created by the change in density of the water, the following relation is obtained:

$$\gamma_o \int_o^L \frac{qz\, dz}{V_2 \gamma_o C_p} = \Delta p = 1.605\, V_2^2 + .224\, V_2 \tag{2.2.9}$$

Reducing (2.2.9) and introducing numerical values for the various constants, it is found that:

$$1.605\, V_2^3 - .224\, V_2^2 - .01171 = 0 \tag{2.2.10}$$

From (2.2.10), V_2 is found to be .156 ft/sec. The two remaining roots are imaginary and therefore are not of any physical interest.

The temperature rise across the reactor is then derived from the following equation:

$$W C_p \Delta T = 100 \text{ KW} \tag{2.2.11}$$

where,

W = weight rate of flow of water through the reactor.

The temperature rise is found to be 11 °F.

The velocity through the channels between fuel plates and the temperature distribution along the channel have now been established.

The next item to be determined is the heat transfer coefficient mentioned previously. In accordance with the statements made earlier and as recommended by Langmuir in Ref. 6 for such a case, the following equation will define the heat transfer coefficient:

$$q/A = h\,(T_w - T_z) \qquad (2.2.12)$$

where,

q/A = heat flux through the wall in BTU/hr-ft^2.

h = heat transfer coefficient, BTU/hr-ft^2-°F.

T_w = wall temperature, °F.

T_z = temperature of the central stream at point z, °F.

For such a case one is faced with a dearth of information on either analytically or empirically derived heat transfer coefficients for flow inside vertical channels under free convection conditions.

One might approach the problem analytically and attempt to solve the differential equations by some numerical means. Dr. H. F. Poppendiek of the Heat Transfer and Hydrodynamics Section of the Oak Ridge National Laboratory advised, however, that such a solution was not possible in the time available.

It was then decided to employ empirically derived formulae which applied to systems generally similar to the problem at hand and back this up, at least as to order of magnitude, with extrapolated experimental results.

It was found by Schmidt and Beckmann, Ref. 7, that the velocity and temperature profile for air flowing past a heated vertical plate in free convection appeared as in Fig. 5. The boundary layer thickness in this case was found to be about 12 mm. Touliakian et al, Ref. 8, state that, generally speaking, the boundary layer thickness for water is about 1/3 that for air. Thus, if this be true then the boundary layer for water under the conditions of the Schmidt-Beckmann experiment would be about 4 mm.

Since the boundary layer thickness is of the order of magnitude of 4 mm and the spacing between plates is 1/2 inch or 17.7 mm, one can expect that there would be no appreciable interference between the boundary layers of the two plates. If one postulates that the unheated sides of the channel are sufficiently far from the center of the channel so that they present little effect in the flow pattern at the center, then one may assume that the relations developed by Nusselt and Juerges and others, Ref. 9, for free convection past vertical heated plates will hold.

The relation for laminar flow arrived at by Nusselt and Juerges is:

$$Nu_z = 0.555\ (Gr_z \cdot Pr)^{1/4} \qquad (2.2.13)$$

where,

$Nu_z = hz/k$ = Nusselt number evaluated at point z.

Pr = Prandtl number = kinematic viscosity/thermal diffusivity.

$Gr_z = g\beta z^3 (T_w - T_z)/\nu^2$ = Grashof number at point z.

It is found from the above that at the top of the fuel element channel the temperature drop through the boundary layer is 41.7 °F. The heat transfer coeffcient is 97 BTU/hr-ft^2-°F.

Lawrence and Sherwood, Ref. 10, arrived at the following relation for upward flow in vertical pipes at .1 ft/sec, or less, flow velocity where free convection is controlling but where there is some forced convection:

$$h = 0.128 \left[k^2 \gamma C_p \beta \Delta T/\nu \right]^{1/3} \qquad (2.2.14)$$

Evaluating this equation for the average temperature drop found from the above, the heat transfer coefficient is 115 BTU/hr-ft^2-°F. This equation was solved using the average temperature drop from the previous case which is 3/4 the temperature drop at the top of the plate, Ref. 2. Therefore, in order to compare heat transfer coefficients the value obtained by equation (2.2.14) must be multiplied by 3/4 to obtain the heat transfer coefficient at the top of the channel since this value in effect represents an average heat transfer coefficient. The heat transfer coefficient at the top is then 81.2 BTU/hr-ft^2-°F. This is in fair agreement with the first value.

These results are based on geometries different from that actually existing in the reactor. It remains, therefore, to establish the validity of the above values by referring to any experimental data on similar systems.

In a recent experiment information was obtained for a similar system which could be extrapolated to this case to obtain a heat transfer coefficient. This experiment provided information as to heat flux and wall temperature at a particular point and by the method of Schwartz previously used the fluid bulk temperature was calculated. The heat transfer coefficient was then calculated from the definition. This result was extrapolated to the Low Cost Reactor configuration by taking the ratios of the Nusselt numbers as defined by equation (2.2.13). It was found by this method that the heat transfer coefficient at the top of a channel was 73 BTU/hr-ft^2-°F. This agrees reasonably well with the other values obtained.

No claim for any great accuracy is made for the above result since the expression used to extrapolate the data to the Low Cost Reactor is not necessarily valid for these flow conditions and the heat flux in the two cases is considerably different, being much less for the Low Cost Reactor.

In any event, one should determine the film drop for the minimum and the maximum case obtained so that one can be reasonably certain that the actual results will be within the limit specified.

The temperature drop by the vertical plate solution was found to be 41.7 °F at the top of the plate. This together with the rise in temperature of the cooling water as it passes through the reactor, 11° F, yields a wall temperature of T_o plus 52.7 °F.

From the heat transfer coefficient at the outlet, from the extrapolated experimental results, one calculates that the temperature drop for this case is 55.3 °F and the temperature of the fuel plate wall is T_o plus 66.3 °F.

To obtain the equilibrium temperature of the pool while operating at 100 KW, T_o, it will be assumed that heat may be lost by evaporation of the water from the surface of the pool and by removal of W pounds of water per hour and replacement of this water by an equal amount of cooler water. It was found that if no water were purged from the pool then the pool would heat up to an equilibrium temperature of about 165 °F.

The heat lost by these two means must equal the heat generated in order for equilibrium to exist. Mark's Handbook gives the rate of heat loss by evaporation to still air from a horizontal water surface as follows:

$$q = 97\ (e-e')\ \text{BTU/hr-ft}^2 \qquad (2.2.15)$$

where e is the vapor pressure of the water in inches of mercury and e' is the vapor pressure of the air above in the same units. The air above will be assumed to remain at 70° F and 60 percent relative humidity.

The heat absorbed by the replacement water is:

$$q' = W\ C_p(T_p - T_1) \qquad (2.2.16)$$

where,

T_p = pool temperature, °F.

T_1 = replacement water temperature, 70 °F.

The surface of the pool is 288 square feet in area.

From the above data, for a pool equilibrium temperature of 80 °F, one must purge 64.9 gallons per minute.

If the above conditions exist then T_o is 80° F and the wall temperature will be 132.7° F for a heat transfer coefficient of 97 and

146.3° for a heat transfer coefficient of 73. These temperatures are well below the boiling point and are therefore considered to be satisfactory.

In determining the point at which boiling occurs one must consider the change in equilibrium temperature of the pool, change in heat transfer coefficient, and change in the temperature rise across the reactor as the power is increased. The rate of rise of the pool temperature is only about 3 degrees F per hour which means that it will have little effect on the boiling level except for very long operating periods at excessive power levels. The change in pool equilibrium temperature will therefore be neglected in these calculations.

From the equilibrium of pressure drop and bouyancy head, equation (2.2.9), the flow velocity for various power levels may be expressed by:

$$1.605\ V_2^3 + .224\ V_2^2 = 3.44 \times 10^{-8}\ P \qquad (2.2.17)$$

where P is the power level in BTU/hr. Knowing the velocity V_2 from the above, one can calculate the temperature rise across the reactor for the power level used.

Other things remaining constant such as β, z, etc., the heat transfer coefficient for various power levels goes as the one-fourth power of the temperature drop across the boundary layer. The temperature drop and heat transfer coefficient at the 100 KW level are known and will be set at 41.7° F and 97 BTU/hr-ft^2-°F. The heat transfer coefficient at some other power level is then expressable as follows:

$$h_P = \frac{97}{(41.7)^{1/4}} (\Delta T)_P^{1/4} = 38.5 (\Delta T)_P^{1/4} \qquad (2.2.18)$$

Using the above formulae one finds, by trial and error, that the maximum temperature at the wall for 400 KW operation is 230°F. This is nine degrees short of the boiling point at this depth of water. This will be taken as the power level limit, however, since this allows a margin of safety to provide for any rise in pool temperature among other things.

The essential requirements of the heat transfer analysis for the 100 KW, free convection operation have been established.

2.3 Loss of Water Problem

The problem to be dealt with in this section is the investigation of what would happen to the reactor should all the water in the pool be suddenly lost.

To answer this problem one must decide by what means the heat can be lost from the reactor. Heat can be lost by conduction through the supporting structure, by convection to the air, and/or by radiation from the reactor faces to the pool walls. Although some heat will be conducted through the supporting structure, the thermal resistances encountered in air gaps, etc. limit the effectiveness of this method. To depend on the natural convection of the air for cooling is to depend on a factor that is at least doubtful in its heat removal properties due to the small heat capacity of the air. One must then depend to a large extent upon the effectiveness of radiation to remove the heat generated in the reactor.

If the reactor loses its water instantaneously then the reactor is shut down instantaneously since the moderator is lost. There is power still being generated in the reactor, however, due to the gamma rays and beta particles which are emitted by the decaying fission products. This heat generation rate drops off immediately to about six percent of the original power and then decays as prescribed by a formula which will be given presently.

One must determine whether this heat is dissipated rapidly enough to prevent melting of the fuel plates. This is a question which must be answered since the melting of the fuel plates would release the highly radioactive fission products to the air.

To adequately describe the situation mathematically, it will be assumed that those elements most near the center point of the reactor will be the hottest. This seems logical since they have no radiating face as do the elements around the outside. It will be further assumed that these elements, due to their symmetry about the center, are thermally similar. Also, it will be postulated that all the heat which leaves one of these central elements must leave via the lower end. This is based on the fact that the adjoining fuel elements are near the same temperature as the center fuel elements and that the large air gaps between elements effectively insulate it on all sides from its neighbor. The top end of the fuel element is capable of radiating heat, of course, but the radiating surface is so small that there is small likelihood of any appreciable heat loss in this direction.

The problem may then be treated as a bar in which heat is generated uniformly but varying with time and which is insulated everywhere except at its lower end through which it is losing heat at a constant

rate of M BTU/hr-ft^2. The rate M is to be specified later. Since the only effective means of dissipating heat from the central element is by conduction of this heat out the bottom of the element, through the grid to an outside face, then one must obtain the value of M from the radiation of heat from the surface.

The mathematical situation may be represented by the following boundary value problem.

The differential equation describing the problem is the Fourier conduction equation:

$$\frac{\partial^2 T}{\partial x^2} + \frac{S(t)}{k} = \frac{1}{a} \frac{\partial T}{\partial t} \qquad (2.3.1)$$

where,

x = distance from the upper end of the rod measured toward the lower end.

t = time after shutdown

k = thermal conductivity

a = thermal diffusivity

T = temperature at any point x at time t

S(t) = heat source term to be defined later

The boundary conditions are:

(1) $T(x,0) = T_o$ = 200° F (1000 KW level) = 130° F (100 KW)

(2) $\frac{\partial T(0,t)}{\partial x} = 0$

(3) $\frac{\partial T(\ell,t)}{\partial x} = -\frac{M}{k}$

The source term, which is the heat generation rate per unit volume of metal in the fuel pla es, is essentially constant spacewise, but

decays with time according to the following formula:

$$S(t) = .0524\ P_o\ t^{-1/5} \left[1 - \left(\frac{t}{t + t_1} \right)^{1/5} \right] \qquad (2.3.2)$$

where,

P_o = power density in the reactor before shutdown

t_1 = time of operation at power P_o prior to shutdown, seconds

t = time after shutdown, seconds

This formula is derived from the relations,

rate of emission of beta particles per fission = $3.5 \times t^{-1.2}$

rate of emission of gamma ray photons per fission = $1.9 \times t^{-1.2}$

where t is the time after fission in days (Ref. 11). This formula was derived also assuming an average gamma ray energy of 0.7 Mev and an average beta particle energy of 0.4 Mev.

It has been also found that slightly more than 50 percent of the gamma ray photons are absorbed in the reactor. This, too, was taken into account in the above formula.

The solution of the above problem will be attempted by the method of LaPlace transforms since the separation of the variables is not possible. The transformation will be made with respect to the variable t.

$$\bar{T}(x,p) = \int_0^\infty e^{-pt}\ T(x,t)\ dt \qquad (2.3.3)$$

Employing (2.3.3), (2.3.1) reduces to:

$$\frac{d^2\bar{T}}{dx^2} - \frac{p}{a}\ \bar{T} = -\left[\frac{T(x,0)}{a} + \frac{\bar{S}(p)}{k} \right] \qquad (2.3.4)$$

By boundary condition (1), $T(x,0) = T_o$, thus the right hand side of equation (2.3.4) equals a constant with respect to x. Integrating (2.3.4) the following results are obtained:

$$\bar{T}(x,p) = A\cosh\sqrt{\frac{p}{a}}\,x + B\sinh\sqrt{\frac{p}{a}}\,x + \frac{q}{p}\left[\frac{T_o}{a} + \frac{\bar{S}(p)}{k}\right] \quad (2.3.5)$$

Taking the inverse transform, (2.3.5) becomes

$$T(x,t) = \mathcal{L}^{-1}\left[A\cosh\sqrt{\frac{p}{a}}\,x + B\sinh\sqrt{\frac{p}{a}}\,x\right] + T_o + \frac{q}{k}\int_0^t S(t)\,dt \quad (2.3.6)$$

By boundary condition (2), $\partial T/\partial x = 0$ at x equal to zero. It can be shown that for $\partial T/\partial x$ = constant that $\partial \bar{T}/\partial x = 1/p\ \partial T/\partial x$ which by (2.3.6) means that B is zero. (2.3.6) then becomes:

$$T(x,t) = \mathcal{L}^{-1}\left[A\cosh\sqrt{\frac{p}{a}}\,x\right] + T_o + \frac{q}{k}\int_0^t S(t)\,dt \quad (2.3.7)$$

By boundary condition (3), $\partial T/\partial x = -M/k$ at $x = l$. Employing the identity just used $\partial \bar{T}/\partial x = 1/p \cdot \partial T/\partial x = -M/k \cdot 1/p$ at x equal to l. (2.3.7) will then become:

$$T(x,t) = \mathcal{L}^{-1}\left[-\frac{M\sqrt{a}}{k p^{3/2}}\frac{\cosh\sqrt{\frac{p}{a}}\,x}{\sinh\sqrt{\frac{p}{a}}\,l}\right] + T_o + \frac{q}{k}\int_0^t S(t)\,dt \quad (2.3.8)$$

By placing the sinh and cosh in their exponential form, the following equation results on dividing the exponentials out into series form:

$$T(x,t) = -\frac{M\sqrt{k}}{\alpha}\mathcal{L}^{-1}\left\{\frac{1}{p^{3/2}}\left[e^{-\frac{(l-x)}{l\alpha}\sqrt{p}} + e^{-\frac{(l+x)}{l\alpha}\sqrt{p}} + e^{-\frac{(3l-x)}{l\alpha}\sqrt{p}} + e^{-\frac{(3l+x)}{l\alpha}\sqrt{p}} + e^{-\frac{(5l-x)}{l\alpha}\sqrt{p}} + e^{-\frac{(5l+x)}{l\alpha}\sqrt{p}} + \ldots\ldots\right]\right\} + T_0 + \frac{q_0}{k}\int_0^t S(t)\,dt$$

(2.3.9)

From the Table of Transforms, Ref. 12, the inverse transform of $p^{-3/2}\, e^{-k\sqrt{p}}$ is $\frac{2\sqrt{t}}{\sqrt{\pi}}\, e^{-k^2/4t} - k\ \mathrm{erfc}\ \frac{k}{2\sqrt{t}}$. Taking the inverse transform of (2.3.9), term by term, the final equation for the temperature distribution in the fuel element is:

$$T(x,t) = -\frac{M\sqrt{\alpha}}{k}\left\{2\sqrt{\frac{t}{\pi}}\left(e^{-\frac{(l-x)^2}{4\alpha t}} + e^{-\frac{(l+x)^2}{4\alpha t}} + e^{-\frac{(3l-x)^2}{4\alpha t}} + e^{-\frac{(3l+x)^2}{4\alpha t}} + \ldots\ldots\right) - \left(\frac{(l-x)}{\sqrt{\alpha}}\mathrm{erfc}\frac{(l-x)}{2\sqrt{\alpha t}} + \frac{(l+x)}{\sqrt{\alpha}}\mathrm{erfc}\frac{(l+x)}{2\sqrt{\alpha t}} + \frac{(3l-x)}{\sqrt{\alpha}}\mathrm{erfc}\frac{(3l-x)}{2\sqrt{\alpha t}} + \frac{(3l+x)}{\sqrt{\alpha}}\mathrm{erfc}\frac{(3l+x)}{2\sqrt{\alpha t}} + \ldots\right)\right\} + T_0 + \frac{q_0}{k}\int_0^t S(t)\,dt$$

(2.3.10)

M must now be evaluated.

M is actually a function of time which depends on the rate at which the surface is radiating heat. M is treated as a constant in

in the above analysis since it is the purpose of this analysis to establish limits as to the time required to melt the fuel element and this end can be accomplished by making such an assumption. To establish the limits of time required to melt one may assume first that there is no heat lost from the rod, M = 0. This will certainly establish the shortest melting time. Then one may assume that the surface of the reactor is instantaneously at a temperature very near the melting point of aluminum, say 1200 °F, and that all faces are radiating heat which is derived solely from the element considered. Both of these conditions do not exist, obviously, but they will serve to establish limits.

The net heat transfer from the walls of the reactor to the walls of the pool by radiation is given by (Ref. 13):

$$q = \sigma \mathcal{E}_R A_R F_{RP} T_R'^4 - \sigma \mathcal{E}_p A_p F_{PR} T_P'^4 \qquad (2.3.11)$$

where,

q = net heat exchange in BTU/hr

$\mathcal{E}$ = emissivity, subscript R means reactor and p, pool walls

A = surface area

F = geometrical factor which determines the fraction of heat radiated by the surface designated by the left subscript to that designated by the right subscript.

σ = Stefan-Boltzmann constant = $.1728 \times 10^{-8}$ BTU/hr-ft^2-°R^4

T' = absolute temperature in degress Rankine of the radiating surface.

The pool walls will be assumed to remain at 68° F. The value of ε_p as found from Ref. 14 for a temperature near the melting point is .063. ε_p is 0.9.

According to Ref. 13, $A_R F_{RP} = A_P F_{PR}$. This statement means, in effect, that if the pool walls receive a large portion of the radiation from the reactor then the reactor receives a small portion of the radiation from the pool walls in the ratio of the areas of the two. If one assumes that all the radiation from the reactor is absorbed by the pool walls, i.e., the geometrical factor F_{RP} is unity, then the geometrical factor F_{PR} is simply the ratio of the radiating surface area of the reactor to the radiating surface area of the pool walls. This is not a bad assumption since the pool walls practically enclose the radiating faces of the reactor. Since the radiating surface of the pool walls is many times that of the reactor this factor will be very small.

The pool walls will be assumed to remain at their original temperature while the reactor walls will be assumed to be near the melting point of aluminum. The ratio of the fourth powers of the two absolute temperatures shows that the temperature term in the second term of the equation (2.3.11) is small compared to the first.

The above reasons combine to make it logical to assume that the second term of the radiation heat transfer equation can be neglected compared to the first. This will be done.

The surface of the reactor available for radiation is 10 square feet. This is based on the conclusion that only the vertical faces of the reactor radiate heat.

The maximum heat loss from the reactor by radiation is then:

$q = .1728 \times .063 \times 10 \times 16.6^4 = 7880$ BTU/hr.

The heat flow area through the bottom of the central fuel element is only the cross-sectional area of the fuel plates in the element. The heat flow per unit area per unit time for this condition is then 84,100 BTU/hr-ft^2. This value will be denoted M_{max}.

The average value of the physical constants over the temperature range considered is:

$k = 142$ BTU/hr-ft-°F

$C_p = 0.26$ BTU/lb-°F

$\gamma = 163$ lbs/ft^3

$a = k/\gamma C_p = 3.35$ ft^2/hr $= .931 \times 10^{-3}$ ft^2/sec.

If one integrates the source term as required by equation (2.3.10), the following is obtained for a power level of 1000 KW before shutdown:

$$\int_0^t S(t)dt = \frac{141.5}{4/5} \left\{ \left[t^{4/5} - (t+t_1)^{4/5} \right] + t_\perp^{4/5} \right\} \qquad (2.3.12)$$

If the reactor operating time, t_1, is large compared to the time after shutdown then the terms involving t_1 drop out. This will be shown to be the case for an initial operating power of 1000 KW. With this assumption, (2.3.12) becomes:

$$a/k \int_0^t S(t)\, dt = 4.17\, t^{4/5} \qquad (2.3.13)$$

Substituting $M_{min} = 0$ and the above determined value for the integrated source term, (2.3.10) reduces to:

$$T(0,t) = 200 + 4.17\, t^{4/5} \qquad (2.3.14)$$

from which it is found that 16 minutes after shutdown the melting point of aluminum, 1220°F, is reached.

For maximum heat flux, M_{max}, the following expression is derived from equation (2.3.10) for x/l = 0:

$$T(0,t) = -18.1\left\{2.26\sqrt{t}\left(e^{\frac{-1.16\times10^3}{t}} + e^{\frac{-9(1.16\times10^3)}{t}} + e^{\frac{-25(1.16\times10^3)}{t}} + \cdots\right) - 136.2\left(\operatorname{erfc}\frac{34}{\sqrt{t}} + 3\operatorname{erfc}\frac{(3)(34)}{\sqrt{t}} + \cdots\right)\right\} + T_o + 4.17\,t^{4/5} \qquad (2.3.15)$$

The determination was made at the point x/l equal to zero because it was found by plotting the equation (2.3.10) for all x for various values of time and M that the maximum temperature occurred at this point.

By trial and error solution, it was found that under these conditions, which are the most favorable ones, that the reactor would melt at a time 18.8 minutes after shutdown.

When the reactor has been operating at a 100 KW level before the postulated emergency occurs, the danger of melting is considerably reduced. It will be seen that this brings about longer times to reach high temperature, in any case, thus requiring one to consider the t_1 terms previously neglected. This condition decreases the value of T_o to 130 °F as specified by boundary condition (1) and also decreases the constant before the source term integral by a factor of 10. Equation (2.3.10) then becomes:

$$T(0,t) = -\frac{M\sqrt{a}}{k}\left\{2.26\sqrt{t}\left(e^{-\frac{1.16\times10^3}{t}} + e^{-\frac{9(1.16\times10^3)}{t}} + \ldots\right)\right.$$

$$- 136.2\left(\operatorname{erf}_c\frac{34}{\sqrt{t}} + 3\operatorname{erf}_c\frac{(3)(34)}{\sqrt{t}} + \ldots\ldots\right)$$

$$\left. + 130 + .417\left[t^{4/5} + t_1^{4/5} - (t+t_1)^{4/5}\right]\right\} \qquad (2.3.16)$$

For $M_{min} = 0$ it was found that a time of approximately 11 hours was required for the fuel elements to reach the melting point. For all faces radiating at the rate M_{max}, (2.3.16) results in a negative temperature which means that before reaching such a heat loss rate the fuel element would have reached thermal equilibrium.

The results for the 100 KW case are not as conclusive as for the 1000 KW case. Even for the fuel element fully insulated, however, 11 hours are required to reach the melting point. This leads one to believe that even if the condition should exist, which it probably will not, then one is provided with sufficient time to take corrective action.

If one wishes to determine the exact temperature to which the fuel elements will rise for the 100 KW operating level it is necessary to approach the problem from a different viewpoint. One may set up some idealized system such as stating that a central element loses its heat by conduction to a single outside element from whence heat is radiated. This would provide a conservative estimate of the final answer since heat from a central element is probably conducted to more than one of the outside elements. One could then set up the

differential equations for the two fuel elements in which the outside fuel element would have a sink as well as source term. This sink term would involve the fourth power of the absolute temperature and would thus make this equation non-linear requiring a numerical solution. There would be a third differential equation which accounted for the thermal resistance of air gaps and aluminum between the inside and outside fuel elements and the thermal capacitance of that portion of the grid lying along the thermal path between fuel elements. These three differential equations would have to be solved simultaneously.

Due to the lack of sufficient time a calculation of the above type could not be done.

It should be pointed out at this time that the assumptions of no heat loss by conduction or convection and the instantaneous loss of pool water are conservative. Actually, there will be some heat loss by conduction and convection and, physically, the water cannot be lost instantaneously. These factors will tend to make the above answers safe ones.

BIBLIOGRAPHY

1. International Nickel Co., Heat Transfer Through Metallic Walls.

2. Eckert, E. R. G., Introduction to the Transfer of Heat and Mass. New York, McGraw-Hill, 1950.

3. Perry, J. H. Chemical Engineer's Handbook. New York, McGraw-Hill, 1950.

4. Downington Iron Works. Heat Transfer Equipment.

5. Schwartz, H. Natural Convection Cooling of Liquid Homogeneous Reactors. AECU-706.

6. Langmuir, I. Physical Review. 34:401, 1912.

7. Schmidt, E., and Beckmann, W. Tech. Mech. U. Thermodynamik. 1:341, 393, 1931.

8. Touliakian, Y. S., Hawkins, G. A., and Jakob, M. Heat Transfer by Free Convection. Trans. ASME. 70:13, 1948.

9. Nusselt W., and Juerges, W. Zeitschr. d. Ver. Deutsch Ing. 72.597, 1928.

10. Lawrence, A. E., and Sherwood, T. K. Industrial Engineering Chemistry. 23:301-309, 1931.

11. Way, K., and Wigner, E. P., Physical Review. 1318, 1948.

12. Churchill, R. V. Modern Mathematical Methods in Engineering. New York, McGraw-Hill, 1944.

13. Hottel, H. C. Geometrical Problems in Radiant Heat Transfer. Heat Transfer Lectures, Vol. II. NEPA-979-IER-13:17, June, 1949.

14. McAdams, W. H. Heat Transmission. New York, McGraw-Hill, 1942.

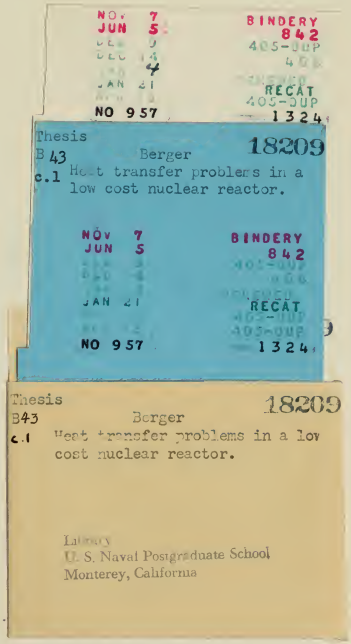
NOV 7
JUN 5
DEC 4
JAN 21
NO 957
BINDERY
842
405-SUP
RECAT
405-SUP
1324
Thesis
B43 Berger 18209
c.1 Heat transfer problems in a low cost nuclear reactor.
NOV 7
JUN 5
JAN 21
NO 957
BINDERY
842
RECAT
405-SUP
1324
Thesis
B43 Berger 18209
c.1 Heat transfer problems in a low cost nuclear reactor.
Library
U. S. Naval Postgraduate School
Monterey, California

thesB43
Heat transfer problems in a low cost nuc
3 2768 002 13744 0
DUDLEY KNOX LIBRARY