Calhoun: The NPS Institutional Archive

DSpace Repository

Theses and Dissertations | 1. Thesis and Dissertation Collection, all items

1994-09

Design and implementation of the calibration module of the MK 92 prototype Maintenance Advisor Expert System

Geick, David Michael; Mikler, Steven Edward

Monterey, California. Naval Postgraduate School

https://hdl.handle.net/10945/30909

This publication is a work of the U.S. Government as defined in Title 17, United States Code, Section 101. Copyright protection is not available for this work in the United States.

Downloaded from NPS Archive: Calhoun

http://www.nps.edu/library

Calhoun is the Naval Postgraduate School's public access digital repository for research materials and institutional publications created by the NPS community. Calhoun is named for Professor of Mathematics Guy K. Calhoun, NPS's first appointed -- and published -- scholarly author.

Dudley Knox Library / Naval Postgraduate School
411 Dyer Road / 1 University Circle
Monterey, California USA 93943

NAVAL POSTGRADUATE SCHOOL
Monterey, California

THESIS

DESIGN AND IMPLEMENTATION OF THE CALIBRATION MODULE OF THE MK 92 PROTOTYPE MAINTENANCE ADVISOR EXPERT SYSTEM

by

David Michael Geick and Steven Edward Mikler

March, 1994

Thesis Co-Advisors: Magdi Kamel
Martin J. McCaffrey

Approved for public release; distribution is unlimited.

Thesis
G25943

DUDLEY KNOX LIBRARY
NAVAL POSTGRADUATE SCHOOL
MONTEREY CA 93943-5101

REPORT DOCUMENTATION PAGE

Form Approved OMB Np. 0704

Public reporting burden for this collection of information is estimated to average 1 hour per response, including the time for reviewing instruction, searching existing data sources, gathering and maintaining the data needed, and completing and reviewing the collection of information. Send comments regarding this burden estimate or any other aspect of this collection of information, including suggestions for reducing this burden, to Washingon headquarters Services, Directorate for Information Operations and Reports, 1215 Jefferson Davis Highway, Suite 1204, Arlington, VA 22202-4302, and to the Office of Management and Budget, Paperwork Reduction Project (0704-0188) Washington DC 20503.

1. AGENCY USE ONLY *(Leave blank)*	2. REPORT DATE	3. REPORT TYPE AND DATES COVERED
	March 1994	Master's Thesis

4. TITLE AND SUBTITLE: Design and Implementation of the Calibration Module of the MK 92 Prototype Maintenance Advisor Expert System

5. FUNDING NUMBERS

6. AUTHOR(S) LT David Michael Geick, USN and
LT Steven Edward Mikler, USNR

7. PERFORMING ORGANIZATION NAME(S) AND ADDRESS(ES)
Naval Postgraduate School
Monterey CA 93943-5000

8. PERFORMING ORGANIZATION REPORT NUMBER

9. SPONSORING/MONITORING AGENCY NAME(S) AND ADDRESS(ES)
Naval Surface Warfare Center, Port Hueneme Division
4363 Missile Way
Port Hueneme, CA 93043-4307

10. SPONSORING/MONITORING AGENCY REPORT NUMBER

11. SUPPLEMENTARY NOTES The views expressed in this thesis are those of the authors and do not reflect the official policy or position of the Department of Defense or the U.S. Government.

12a. DISTRIBUTION/AVAILABILITY STATEMENT
Approved for public release; distribution is unlimited.

12b. DISTRIBUTION CODE

13. ABSTRACT *(maximum 200 words)*

This thesis is the continuation of a software project to develop a diagnostic expert system for the MK92 Fire Control System based on the daily system operability test (DSOT). The focus of this work is on the design and implementation of the calibration portion of the expert system using the Adept visual programming expert system shell.

The calibration module is designed as a top-down hierarchy of cohesive, loosely coupled procedures. These procedures are linked through two-way links. This modular, structured design resulted in a compact system that is easy to read, modify, maintain, and test. Many of the logical troubleshooting paths are implemented using common procedures with variables, reducing application size and recognizing the expert's use of identical logic to isolate problems in different areas of the MK92 system.

The calibration module fulfills the design and functional objectives set by the project team and project sponsor. Preliminary testing shows the module to be successful in MK92 DSOT calibration fault isolation.

14. SUBJECT TERMS Expert System, Prototype, System Design, Knowledge Implementation, MK92 Fire Control System, Software Design, Software Development, DSOT, DSOT Calibration

15. NUMBER OF PAGES 212

16. PRICE CODE

17. SECURITY CLASSIFICATION OF REPORT	18. SECURITY CLASSIFICATION OF THIS PAGE	19. SECURITY CLASSIFICATION OF ABSTRACT	20. LIMITATION OF ABSTRACT
Unclassified	Unclassified	Unclassified	UL

NSN 7540-01-280-5500

Standard Form 298 (Rev. 2-89)
Prescribed by ANSI Std. 239-18

Approved for public release; distribution is unlimited.

Design and Implementation of the Calibration Module of the
MK 92 Prototype Maintenance Advisor Expert System

by

David Michael Geick
Lieutenant, United States Navy
B.A., University of New Hampshire, 1985
and
Steven Edward Mikler
Lieutenant, United States Naval Reserve
B.S., Canisius College, 1986

Submitted in partial fulfillment
of the requirements for the degree of

MASTER OF SCIENCE IN INFORMATION TECHNOLOGY MANAGEMENT
from the
NAVAL POSTGRADUATE SCHOOL
March 1994

Author: [redacted]
David Michael Geick

Author: [redacted]
Steven Edward Mikler

Approved by: [redacted]
Magdi Kamel, Thesis Co-Advisor

[redacted]
Martin J. McCaffery, Thesis Co-Advisor

[redacted]
David R. Whipple, Chairman
Department of Systems Management

ABSTRACT

This thesis is the continuation of a software project to develop a diagnostic expert system for the MK92 Fire Control System based on the daily system operability test (DSOT). The focus of this work is on the design and implementation of the calibration portion of the expert system using the Adept visual programming expert system shell.

The calibration module is designed as a top-down hierarchy of cohesive, loosely coupled procedures. These procedures are linked through two-way links. This modular, structured design resulted in a compact system that is easy to read, modify, maintain, and test. Many of the logical troubleshooting paths are implemented using common procedures with variables, reducing application size and recognizing the expert's use of identical logic to isolate problems in different areas of the MK92 system.

The calibration module fulfills the design and functional objectives set by the project team and project sponsor. Preliminary testing shows the module to be successful in MK92 DSOT calibration fault isolation.

Thesis
G25943
c.2

TABLE OF CONTENTS

I. INTRODUCTION.....1

A. BACKGROUND.....1

B. OBJECTIVES.....1

C. RESEARCH QUESTIONS.....2

D. SCOPE AND ASSUMPTIONS.....2

E. METHODOLOGY.....3

F. THESIS ORGANIZATION.....3

II. MK92 MAINTENANCE ADVISOR EXPERT SYSTEM BACKGROUND.....6

A. THE MK92 FIRE CONTROL SYSTEM (MK92 FCS).....6

B. THE MK92 MAINTENANCE ADVISOR EXPERT SYSTEM (MK92 MAES).....6

C. THE MK92 DAILY SYSTEM OPERABILITY TEST (DSOT).....7

D. DSOT CALIBRATION ELEMENTS.....7

E. EXPERT KNOWLEDGE ACQUISITION AND REPRESENTATION.....8

F. ADEPT EXPERT SYSTEM SHELL.....8

III. MK92 MAES CALIBRATION IMPLEMENTATION DESIGN.....10

A. KNOWLEDGE BASE ORGANIZATION.....10

B. SYSTEM FUNCTIONAL ATTRIBUTES.....11

1. DSOT Printout Entry Interface For User Input.....11

2. Manual Path Selection Capability.....12

3. Multiple Casualty Condition Analysis.....12

4. Help Screens.....12

DUDLEY KNOX LIBRARY
NAVAL POSTGRADUATE SCHOOL
MONTEREY CA 93943-5101

5. Database Interface.....13

6. Page Back to Previous Screen.....13

C. DESIGN ATTRIBUTES.....13

1. Minimal Overall Size.....14

2. Use of Standardized Display Layouts.....15

3. Use of a Top-Down Hierarchy and Two-Way Links....15

D. DESIGN METHODOLOGY 18

E. CALIBRATION PROTOTYPE APPLICATION DESIGN.....20

1. Calibration Logical Design.....20

2. Calibration Physical Design.....21

3. Example Session.....22

IV. LESSONS LEARNED.....26

A. ADEPT EXPERT SYSTEM SHELL.....26

1. Goal Nodes vs. Result Nodes.....26

2. Display Objects and Variables.....27

3. List Boxes vs. Buttons.....28

4. Display Text.....29

5. Utilization of Global Variables.....29

6. Customizing Using Script Nodes.....31

7. Use of Descriptive Names.....32

B. DESIGN AND IMPLEMENTATION.....33

1. Overview Abstraction.....33

2. Use of Common Procedures.....34

V. SUMMARY AND CONCLUSIONS.....35

A. IMPLEMENTATION DESIGN.....35

B. CONTINUING MK92 MAES ISSUES.....36

1. Verification, Validation and Testing.....37
2. Additional Functionality.....37
3. Standardization of Calibration and Performance Modules.....38
4. Direct Casualty Input Interface.....40
C. OTHER EXPERT SYSTEMS.....40
D. SUMMARY.....41
APPENDIX A.....43
APPENDIX B.....189
APPENDIX C.....194
LIST OF REFERENCES.....204
INITIAL DISTRIBUTION LIST.....205

I. INTRODUCTION

A. BACKGROUND

This thesis discusses the implementation of expert knowledge for the calibration portion of the Daily System Operability Test (DSOT) for the MK92 Fire Control System Maintenance Advisor Expert System (MK92 MAES). It is a continuation of a software development project undertaken by Naval Postgraduate School faculty and graduate students. The initial implementation of the MK92 MAES has two distinct modules: calibration and performance.

The initial prototype of the performance module was constructed by LCDR Clint Lewis and LT C. David Smith. Those interested in detailed discussions of the origins of the project, software development, expert system lifecycle, and Daily System Operability Test (DSOT) are referred to References (1) and (2).

B. OBJECTIVES

The goal of this thesis is to continue development of the MK92 MAES by implementing the calibration module of DSOT using the Adept expert system shell. The goal of the prototype is to accurately implement the expert knowledge acquired and represented by the system engineers at the Naval Surface Warfare Center, Port Hueneme Division (NSWC, PHD). The

program is composed of functional modules and accomplishes all the functional requirements identified by NSWC.

Another thesis objective is to refine the implementation strategy used for the initial prototype [Refs. 1 and 2]. The development of the DSOT portion of the MK92 MAES will be completed by a follow on group that will integrate the performance and calibration modules, perform an independent validation, verification and testing of the system, and determine the implementation alternatives for shipboard deployment. Lessons learned through calibration implementation will be applied to the performance module and the integration of the two modules. A third module, covering MK92 FCS system power checks, is scheduled for development in fiscal year 1995.

C. RESEARCH QUESTIONS

This research seeks to answer the following questions:

1. How can the system's knowledge base be implemented to minimize duplication of logically identical procedures?

2. Using the Adept expert system shell, what user interface design is best for the individual end-user?

3. What implementation design best organizes the system as a coherent whole and provides for effective and efficient software maintenance?

D. SCOPE AND ASSUMPTIONS

This thesis focuses on the design and software development of the MK92 MAES calibration module. The reader is assumed to

have a basic understanding of both software development and expert systems. References (1) and (2) provide a useful resource for this. The scope of our task is limited to DSOT calibration implementation. The functional requirements and graphical knowledge representation provided by NSWC Port Hueneme personnel served as the basis for the functionality of the system.

E. METHODOLOGY

The MK92 MAES project uses an expert systems development cycle as its methodology. Prereau organizes this development cycle into three phases: Initial, Core Development, and Final Development and Deployment.[Ref 3] This thesis covers the design and implementation of the DSOT calibration module and represents part of the Core Development Phase. This phase is composed of knowledge acquisition, knowledge representation, knowledge implementation, and validation, verification, and testing. The Core Development Phase represents the point in development where domain expertise is entered into the expert system.

F. THESIS ORGANIZATION

This thesis is divided into five chapters and three appendices.

Chapter II provides background information pertaining to the MK92 Mod 2 Fire Control System (MK92 FCS) diagnostic expert system software development project. It covers the origins of the project and briefly discusses the MK92 Fire

Control System, the Daily System Operability Test (DSOT), the calibration portion of DSOT, expert knowledge acquisition and representation, and the expert system shell used to build the application.

Chapter III discusses the design and implementation of the calibration module of the MK92 MAES. It includes sections on the overall organization of the application, functional attributes of the MK92 MAES, design attributes of the application, and the actual design of the expert system.

Chapter IV contains lessons learned in the course of the thesis research, particularly in designing and implementing a software development project and using the Adept expert system shell.

Chapter V contains a summary of our conclusions on the design and implementation of the calibration module, issues that remain with the MK92 MAES development project, and the potential application of similar expert systems.

Appendix A contains a complete description of the application software built for the MK92 MAES. It lays out the overall organization of the design, and documents every procedure in the application. Diagrams for every procedure are included. All custom built logic contained within "custom nodes" is listed immediately following the description of the procedure where the custom node is contained.

Appendix B discusses significant differences between the designs and implementations of the performance and calibration modules of the MK92 MAES.

Appendix C is a listing of all of the identified casualty conditions, showing the indications that signify each particular condition and the troubleshooting path that should be taken to resolve the indicated condition. This list is prioritized in descending order of criticality.

II. MK92 MAINTENANCE ADVISOR EXPERT SYSTEM BACKGROUND

This chapter discusses the MK92 Fire Control System (MK92 FCS), the genesis and purpose of the MK92 Maintenance Advisor Expert System (MK92 MAES), the elements of the MK92 Daily System Operability Test (DSOT), and the elements of the DSOT calibration. Additionally, the source of the knowledge base and the features of the expert system shell used for development are described.

A. THE MK92 FIRE CONTROL SYSTEM (MK92 FCS)

The MK92 FCS is a modular system that integrates radars, guns, and missiles to engage air, surface, and shore targets. The Mod 2 version is deployed on United States Navy Oliver Hazard Perry (FFG-7) class guided missile frigates. The two primary antennas in the system are the Combined Antenna System (CAS) and the Separate Tracking and Illuminating Radar (STIR). A more detailed description of the MK92 FCS can be found in References (1) and (2).

B. THE MK92 MAINTENANCE ADVISOR EXPERT SYSTEM (MK92 MAES)

The MK92 MAES project originated at NSWC Port Hueneme in 1992. The goal was to improve the shipboard technician's ability to more accurately isolate faults to individual circuit cards by embedding the knowledge of the best engineering experts in an expert system software program to be

employed aboard ship. The Naval Postgraduate School (NPS) became involved after initial program development attempts by NSWC personnel ran into difficulties. A cost-benefit analysis determined that significant savings (over one million dollars) could be achieved with the deployment and use of this expert system [Ref 4]. The initial design concentrated on the performance test aspect of DSOT.

C. THE MK92 DAILY SYSTEM OPERABILITY TEST (DSOT)

DSOT is part of daily shipboard maintenance procedures. It runs checks and simulations to determine if the MK92 Mod 2 systems are functional. DSOT is divided into two distinct areas: performance and calibration. At the completion of the DSOT a technician receives a printout that lists failures, power high or power low (PHI or PLO) conditions for twenty different specific areas.

D. DSOT CALIBRATION ELEMENTS

The DSOT calibration tests break down into two main areas: the Combined Antenna System (CAS) and the Separate Tracking Illuminating Radar (STIR). CAS breaks down further into track and search. In each area, CAS Track/CAS Search/STIR Track, there are fixed frequency (FF) and frequency agile (FA) aspects of the three basic modes in calibration: target, clutter, and electronic countermeasures (ECM). Additionally, both CAS and STIR calibrate their respective automatic frequency control (AFC) elements.

E. EXPERT KNOWLEDGE ACQUISITION AND REPRESENTATION

The expert knowledge for the system was gathered by NSWC from MK92 system engineers considered domain experts. It was represented and organized in the form of diagnostic trees. This knowledge is a distillation of information from the technical manuals for the MK92 FCS and the personal experience and heuristics (rules of thumb) of system experts.

F. ADEPT EXPERT SYSTEM SHELL

Adept is a procedurally based, visual programming expert system shell. It was selected by the development team because it was specifically designed for diagnostic expert system development and the fact that there is an excellent match between the expert's knowledge representation (diagnostic trees) and Adept's procedures constructed of nodes and arcs. Another significant benefit was its rapid learning curve [Ref. 2].

Using Adept, an application is built as a collection of procedures. These procedures can be linked together in two basic ways: results and goals. Results are one-way links that allow the program to "jump" to a different procedure. Goals are two-way links that allow the program to leave one procedure, accomplish some task in another procedure, and return to the calling procedure to continue where it left off. Figure 1 contrasts one-way and two-way linking.

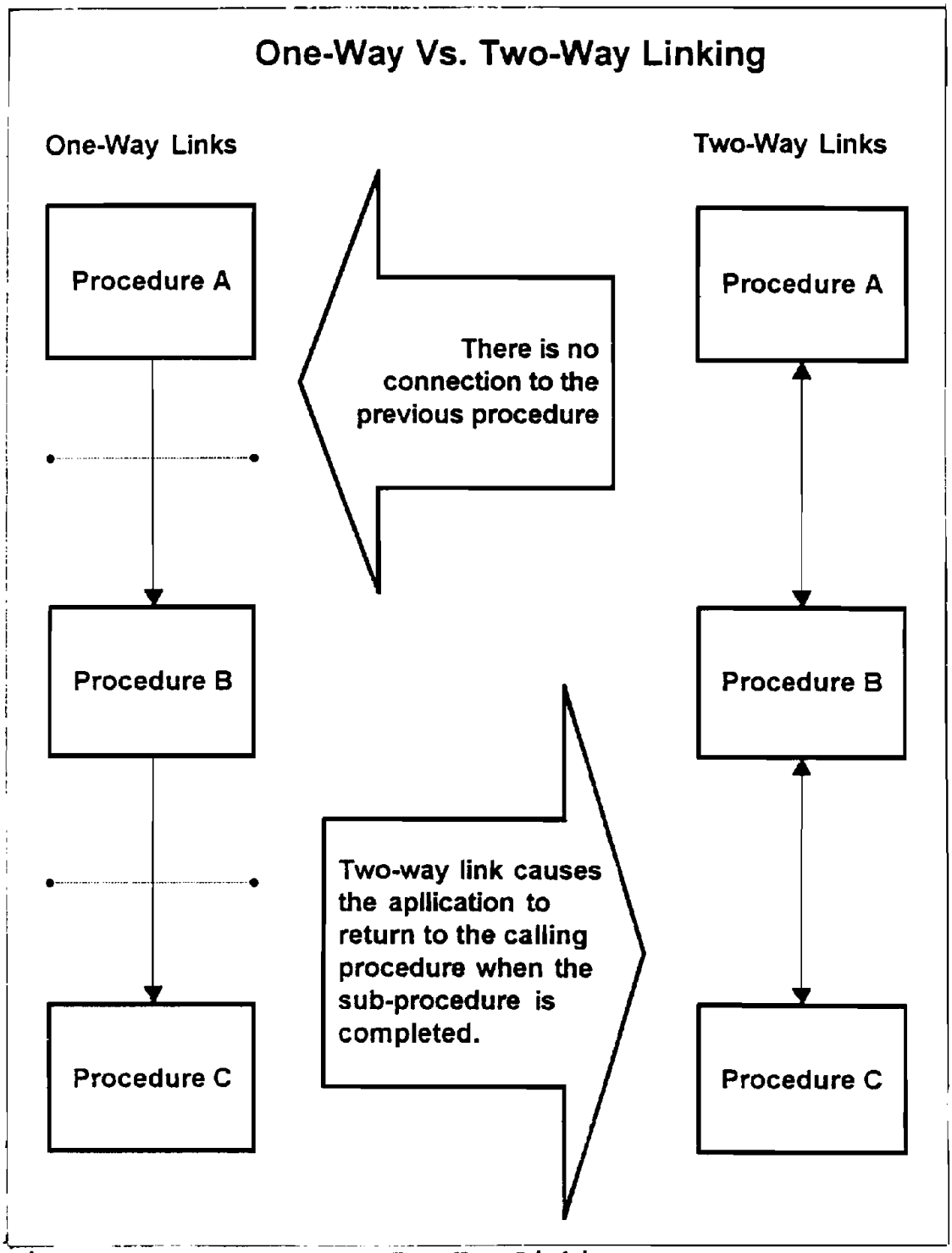

Figure 1 One-Way vs. Two-Way Linking

III. MK92 MAES CALIBRATION IMPLEMENTATION DESIGN

This chapter describes the design of the calibration module of the MK92 MAES. It details the translation of the expert knowledge representation into an Adept application and procedures. The organization of the knowledge base is described, and the six functional and three design attributes that were objectives for this prototype module are discussed. The logical and physical design of the calibration module are described explicitly and illustrated by an example session using the module.

A. KNOWLEDGE BASE ORGANIZATION

The overall organization of the MK92 MAES reflects the system expert's representation embodied in the initial knowledge document delivered by NSWC to NPS. The MK92 Mod 2 expert identified fifty-seven discrete casualty conditions that can be identified from indications on the DSOT printout. These are organized according to the basic divisions within DSOT calibration: CAS and STIR; search and track; fixed frequency (FF) and frequency agile (FA); target, clutter, and electronic countermeasures (ECM). This resulted in the designation of twenty-seven discrete troubleshooting paths (See Appendix C).

These paths satisfy the fault isolation requirements of all fifty-seven casualty conditions. For example, STIR Track ECM fixed frequency and frequency agile modes, STIR track ECM fixed frequency modes, and STIR track ECM frequency agile modes are all resolved through the STIR Track ECM path. The relative priorities of the three conditions are different. In some cases there are substantial differences in criticality between the fixed frequency and frequency agile flavors of a given condition.

The troubleshooting paths were laid out in the format of diagnostic trees. The format established poses questions to the user that requires a "Yes" or "No" answer and eventually leads to the isolation of the fault and a recommendation for correcting that fault.

B. SYSTEM FUNCTIONAL ATTRIBUTES

NSWC and NPS jointly defined several attributes that the application should have. An attribute is a specific feature that addresses an issue defined as critical or desirable by the development team. The following paragraphs provide a brief description of each attribute.

1. DSOT Printout Entry Interface For User Input

The program solicits initial data from the technician for troubleshooting path selection. A screen similar in organization and layout to the familiar DSOT printouts is presented to the user. The appropriate deficiencies are marked by the user. The system then identifies and

prioritizes the casualty conditions. The user is guided through the appropriate path to isolate the fault.

2. Manual Path Selection Capability

It was recognized that the application should allow the user to select a specific troubleshooting path. This could be used for unusual circumstances where either the embedded analysis cannot identify a proper path or the technician wishes to bypass the system's prioritization or analysis and select a specific path. This capability is particularly useful for training purposes.

3. Multiple Casualty Condition Analysis

The system was designed to recognize multiple casualties and resolve the conditions by providing a prioritized fault isolation process. This aspect of the system was not previously available to the shipboard technician from technical manuals. It is an illustration of the expert's knowledge and heuristics which are embedded in this system.

4. Help Screens

In an effort to improve the technician's efficiency it was decided to include additional help information provided by the expert. This help includes instructions on how to set up and perform tests. In some cases amplifying explanations that tell why a test is performed are also provided.

5. Database Interface

In order to maintain the integrity of the knowledge base from changes in data and information not directly affecting it, a system design decision calls for the development of an interface to a personal computer database management system. Information on parts (such as their national stock number, NSN) referred to by the application (e.g., replace UD 412/A1A3-A9) would reside in the database. Changes to this information are more volatile than the knowledge changes and are usually made by outside agencies. By providing such separation, maintenance changes that affect the database could be sent out by message. The user would update the database independently from the expert system.

6. Page Back to Previous Screen

Another desired system feature is for the user to be able to return to the previous display screen. This could be to review a previous step or to reenter a previous incorrect response.

The above functional attributes were included to make the system a more complete and useful tool for the technician.

C. DESIGN ATTRIBUTES

Our goals for the design of MK92 MAES calibration were strongly influenced by the need to be compatible with the previous effort used for the performance module. There was also a desire to use good software engineering practices that emphasize structured programming. This emphasis was essential

for developing a readable, maintainable, and modifiable software application. Below are three key design attributes that were used for development of the calibration module.

1. Minimal Overall Size

While the storage requirements for the MK92 MAES are not stringent or restrictive, a conscious effort was made to minimize the overall size of the program. A review of the documented knowledge during module design revealed that expert troubleshooting often follows identical paths, differing only in limited specifics. As a result, "common" procedures were built for these paths. Passing variables allows the customization of common procedures into specific ones.

For example, CAS AFC failure and STIR AFC failure troubleshooting paths are identical when certain variables are used in the questions posed to the user. CAS AFC uses "412" where STIR AFC uses "432" and so on. In one case six discrete casualty condition troubleshooting paths were satisfied by one common procedure. This greatly reduced the effort required to program the total number of paths, enhanced the performance of the end product, and resulted in a system that is easier to maintain and modify.

With the exception of All CAS Modes and All STIR Modes, each of the remaining 25 fault isolation paths is either completely unique or shares a common procedure with other paths. All CAS Modes and All STIR Modes share a common procedure for one part of their paths, but have unique

elements as well. (Refer to Figure 13, Calibration Procedures, in Appendix A.)

If a path is unique, it may still have elements, and possibly sub-elements, that will be called according to the user responses to system prompts. If a path shares a common procedure, it merely sets the variables required and calls the common procedure. In this respect, all module operations will be kept transparent to the user.

2. Use of Standardized Display Layouts

The calibration module uses the established display formats built for the performance module. The goal is to provide a uniform appearance throughout the system when the two main modules, performance and calibration, are integrated.

3. Use of a Top-Down Hierarchy and Two-Way Links

The general scheme used in knowledge representation for calibration revolves around a top-down hierarchy where subordinate procedures are called with two-way links. These subordinates could call other procedures as their subordinates. This scheme is beneficial because it allows for very cohesive procedures and functional coupling between these procedures. Figure 2 illustrates the master-subprocedure scheme.

When the top level procedure (Calibration Menu) requires a subordinate task, it calls a subordinate procedure to accomplish the task. When completed, the subordinate procedure returns control to the calling master procedure.

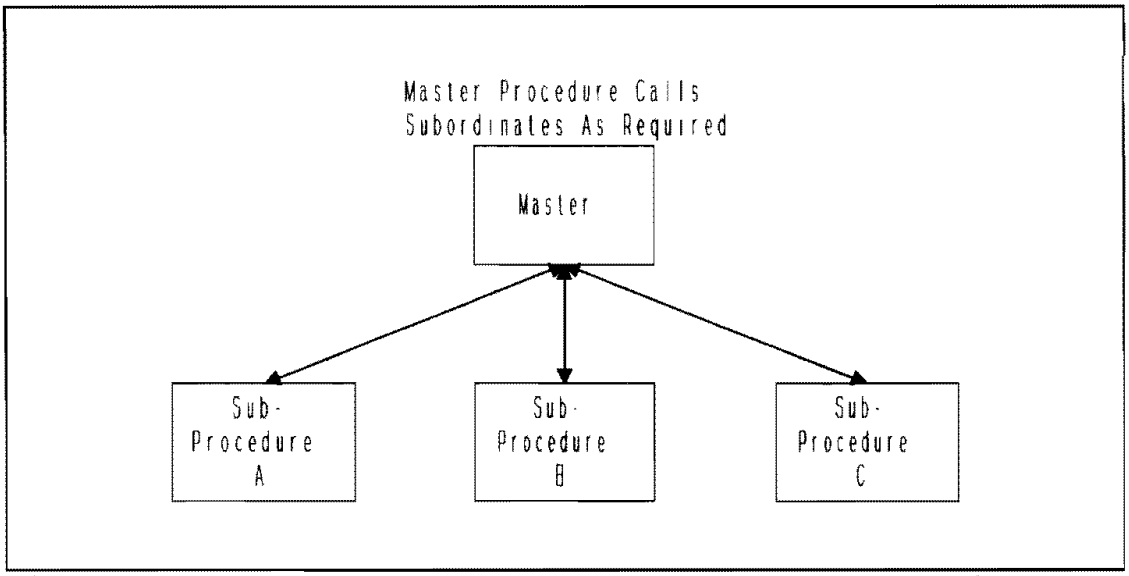

Figure 2 Master-Subordinate Procedure Relationship

The master procedure then resumes its processing where it left off. The Calibration Menu itself is called by the Main Menu of the MK92 MAES. Figure 13 in Appendix A shows the hierarchy of all fifty-nine procedures, grouped by level, with all connections between calling procedures shown by solid lines.

Adept "goal" nodes are the mechanism used for implementing two-way linking. A called procedure may return a value of "true", "false", or "unknown" to the node calling it. To return "true" or "false", the goal procedure must end in a result node off a true or false arc, respectively. If the goal procedure ends, however, with a display or calculation node, a value of "unknown" is always returned. This enabled us to cascade goals, as seen in Figure 3.

The ability of an Adept goal procedure to return a value of "unknown" is central to the calibration module's

capability of handling multiple casualty conditions. Several of the casualty conditions utilize the same path procedure.

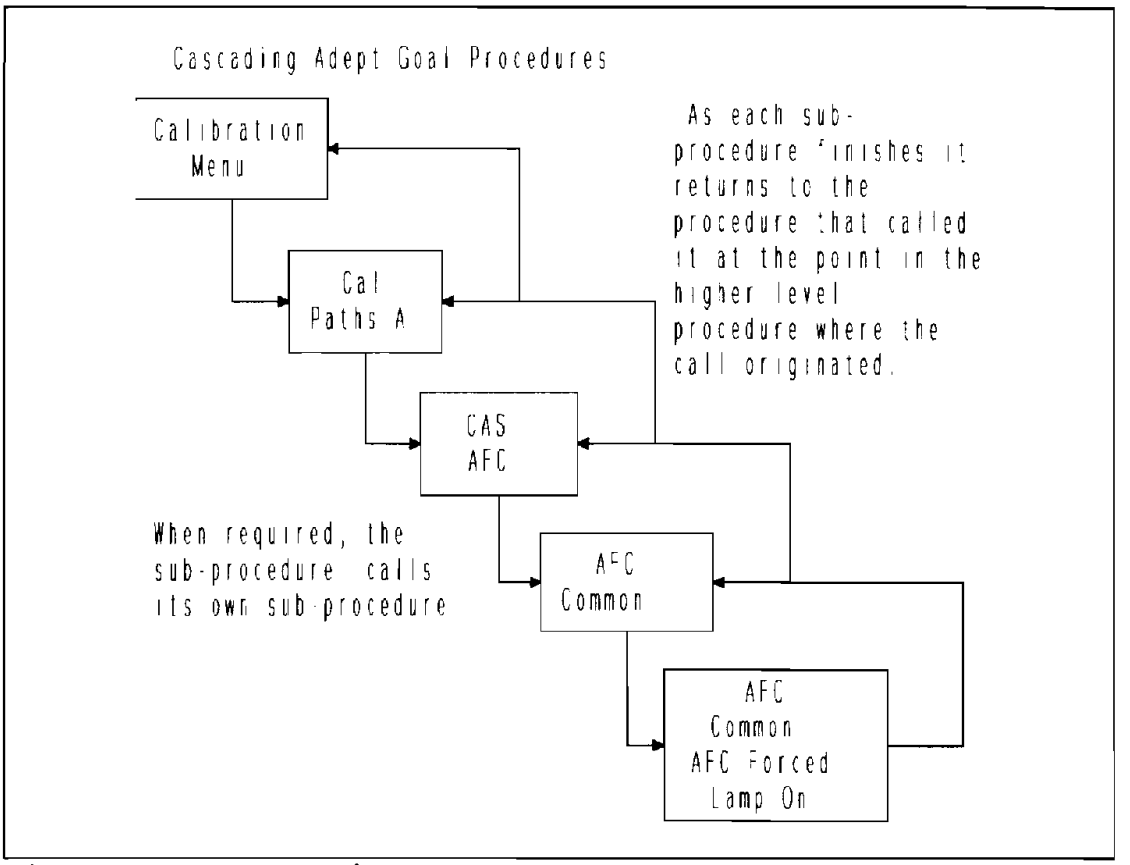

Figure 3 Cascading Adept Goal Procedures

For example, CAS Search Target fixed frequency and frequency agile use the same procedure, CAS Search Target, in troubleshooting both casualty conditions. If a value of "true" or "false" is returned by the goal procedure, it cannot be used again if it is required for another casualty condition. However, a value of "unknown" ensures that the path procedure will be executed a second time if necessary.

D. DESIGN METHODOLOGY

The first task accomplished was to reorganize the knowledge representation diagnostic trees provided by the expert into one comprehensive chart. This allowed us to view the knowledge as a coherent whole that could be analyzed for

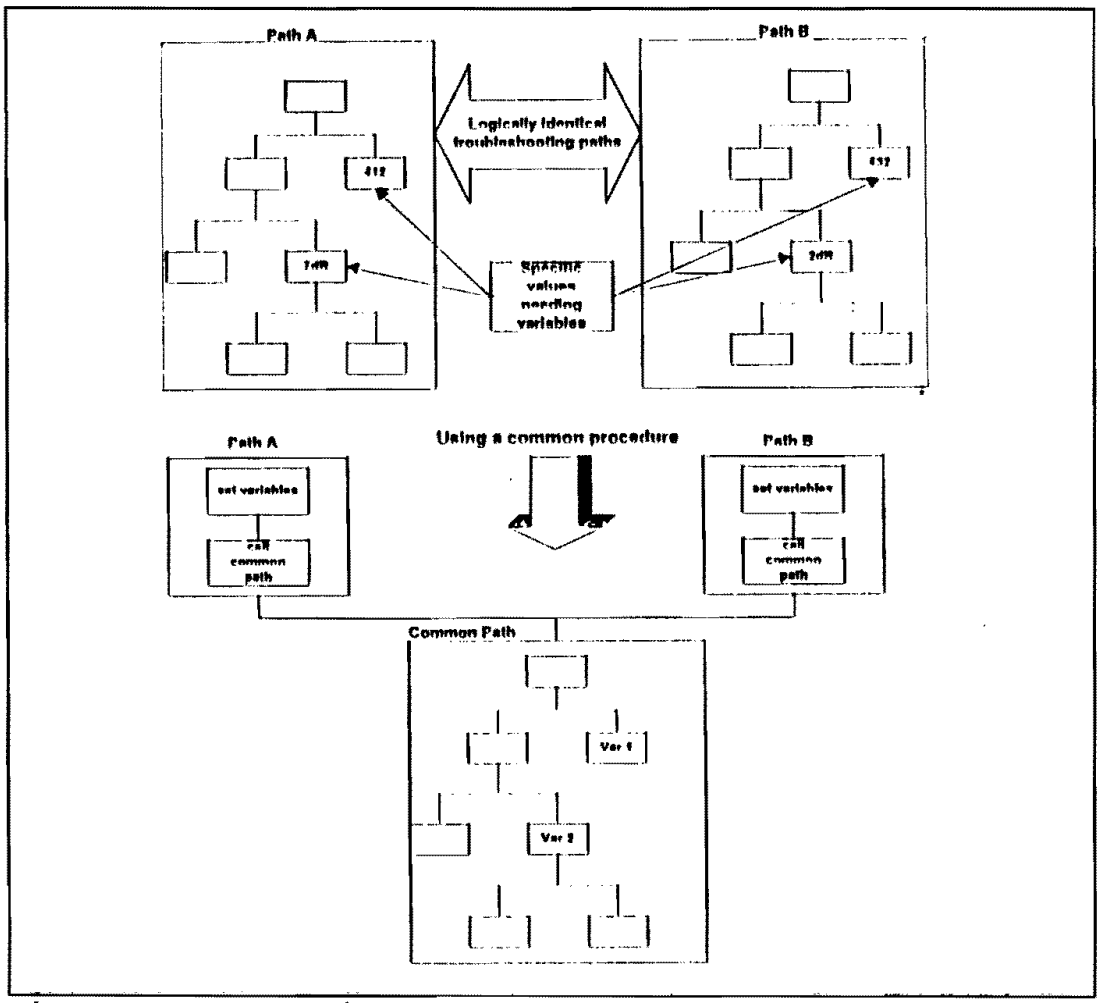

Figure 4 Genesis of a Common Procedure

patterns and similarities between elements of the expert diagnosis. We noted that several paths in CAS Search mirrored

similar paths in CAS Track. Further examination showed the same situation between CAS paths and STIR paths. These similar paths were then designated as tasks to be accomplished by common procedures (Figure 4). We also noted that calibration knowledge allowed a different design approach from that used to implement the performance module. A discussion of the differences can be found in Appendix B.

Based on the analysis of diagnostic trees accomplished in the previous task, the system was designed modularly into procedures, subprocedures, and sub-subprocedures. a procedure can call a subprocedure to perform certain tasks. Once performed, control is returned to the calling procedure. For example, the procedure, Calibration Menu, requires the user to choose between manual or automatic path selection. Upon user selection, Calibration Menu calls either Manual Menu or Printout Entry Menu. After the user selects a specific path from Manual Menu or completes entering casualty conditions from the DSOT printout into the Printout Entry Menu, the system returns to Calibration Menu.

The resultant design for the calibration module was a two-way linked hierarchy of procedures, subprocedures, and sub-subprocedures. Logically identical paths are condensed into common procedures that can be customized through variables to suit several different individual troubleshooting paths. The user can choose between expert analysis of casualty conditions and direct selection of specific troubleshooting paths.

E. CALIBRATION PROTOTYPE APPLICATION DESIGN

The following sections focus on design issues encountered in development of the calibration portion of MK92 MAES. A distinction is made between the logical design apparent to the user and the physical design as viewed by the expert system maintainer or developer.

1. Calibration Logical Design

Logically, there are three distinct levels in the design of calibration:

- A choice of path selection method (i.e., directly or via DSOT printout indications and system analysis);
- A path selection (e.g., All CAS Modes);
- A path execution via specific diagnostic tree.

At level one the user enters calibration and decides which troubleshooting method he wishes to use. This level provides several functional advantages to the user. Selection of the Printout Entry Menu allows the system to utilize the embedded expert knowledge to determine the casualties and their priorities. The Manual Menu allows users to select a particular path they believe provides the most likely means of determining the cause of a fault. This method also provides a means for training junior personnel in the heuristics of troubleshooting.

The second level, path selection, follows directly from the choice the user made in level one. Whether the user selects the path directly or using the analysis performed by

the system, the casualty indications will determine the necessary troubleshooting path.

Finally, the fault isolation level has twenty-seven specific paths. These paths are displayed in Appendix C. In a given session, the casualty indications may require that more than one path be used to resolve the overall system casualty. Once all faults are isolated the system returns to the Main Menu.

2. Calibration Physical Design

The three logical levels are implemented in fifty-nine procedures broken into the six physical levels listed below:

- Area Menu (e.g., Calibration Menu or Performance Menu);
- Sub-Area (e.g., Printout Entry Menu);
- Path (e.g., All CAS and STIR);
- Path Element or Common (e.g., All CAS Modes No OFFLINE Light or AFC Common);
- Path Sub-Element or Common Element (e.g., All STIR Modes Power Head Cal or AFC Forced Lamp On);
- Path Sub-Sub-Element or Common Sub-Element (e.g., All STIR Modes Mixer Cal or AFC Mag Sample Not In Spec).

Figure 13 in Appendix A shows the relationship between the six physical layers. All procedures below the Calibration Menu are goal procedures. This provides two-way links and establishes Calibration Menu as central, top level procedure.

The twenty-seven possible fault isolation paths are accessed by examining the boolean status of the fifty-seven casualty conditions. In order to keep the Calibration Menu

small, the casualty conditions were split into eight groups (Cal Paths A through Cal Paths H). A procedure called Cal Path Group Evaluation determines which groups are necessary. The order of the conditions in each group determines the fault isolation path priorities. The Cal Path groups are called by the Calibration Menu only if needed.

Within Cal Path Group Evaluation, if a Cal Path contains any conditions with the value of "true", that particular Cal Path procedure will be called. When the Cal Path procedure is called the path procedure required for fault isolation is determined by the boolean status of the casualty condition. Within each group, each casualty condition is directed to one specific troubleshooting path.

3. Example Session

This section discusses a typical session using the calibration portion of MK92 MAES (Figure 5).

As previously indicated, the Calibration Menu is called from the Main Menu. This menu asks the user to choose a method of path selection: manual (direct) or automatic (using expert indication diagnosis).

Based on that selection, the Calibration Menu calls the Manual Menu or Printout Entry Menu. The Manual Menu allows the user to choose one path out of the twenty-seven fault isolation possibilities, and returns to the Calibration Menu when a diagnostic path is completed.

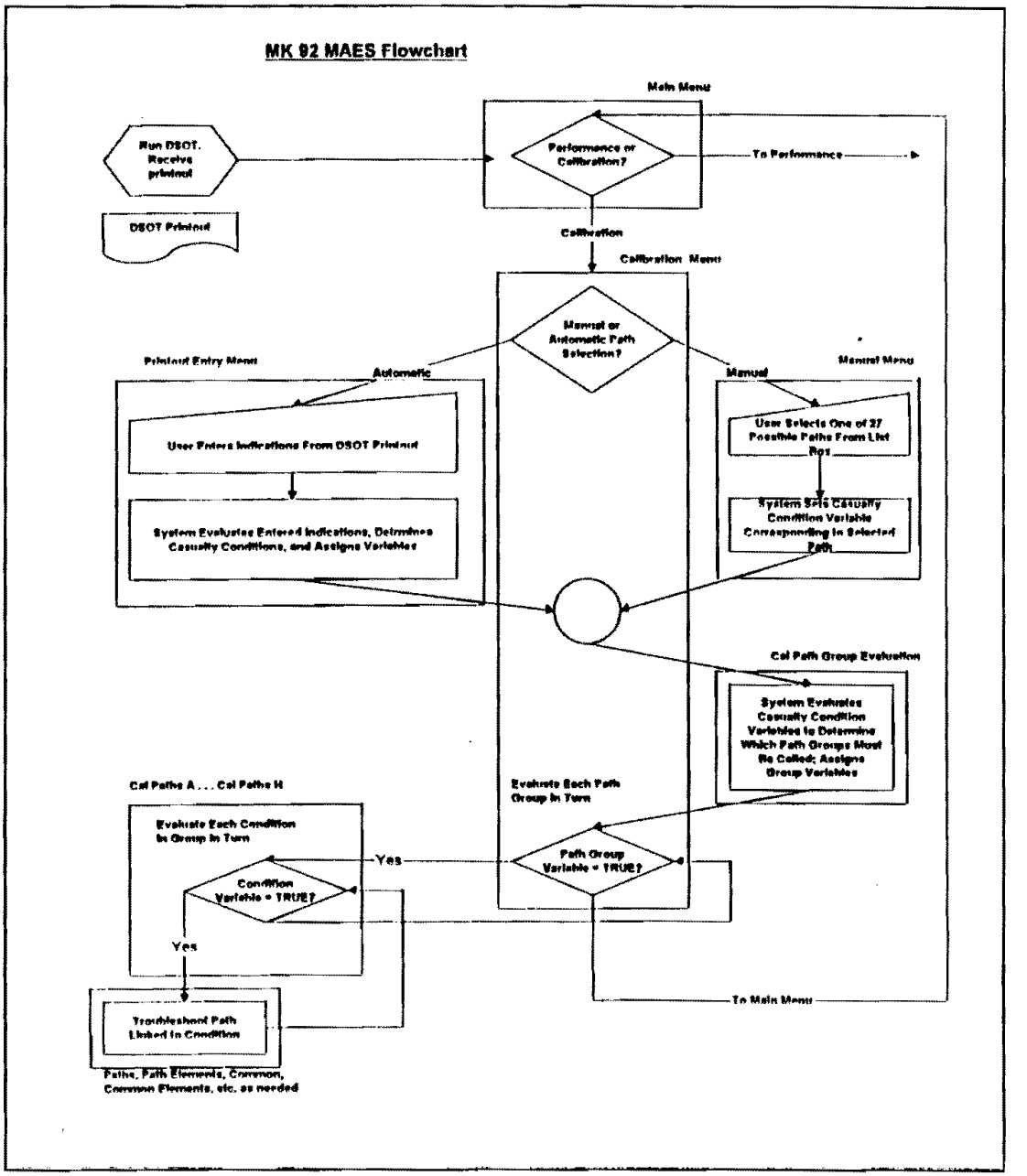

Figure 5 MK92 MAES Flowchart

The Printout Entry Menu presents the user with a screen mimicking the DSOT printout (Figure 6).

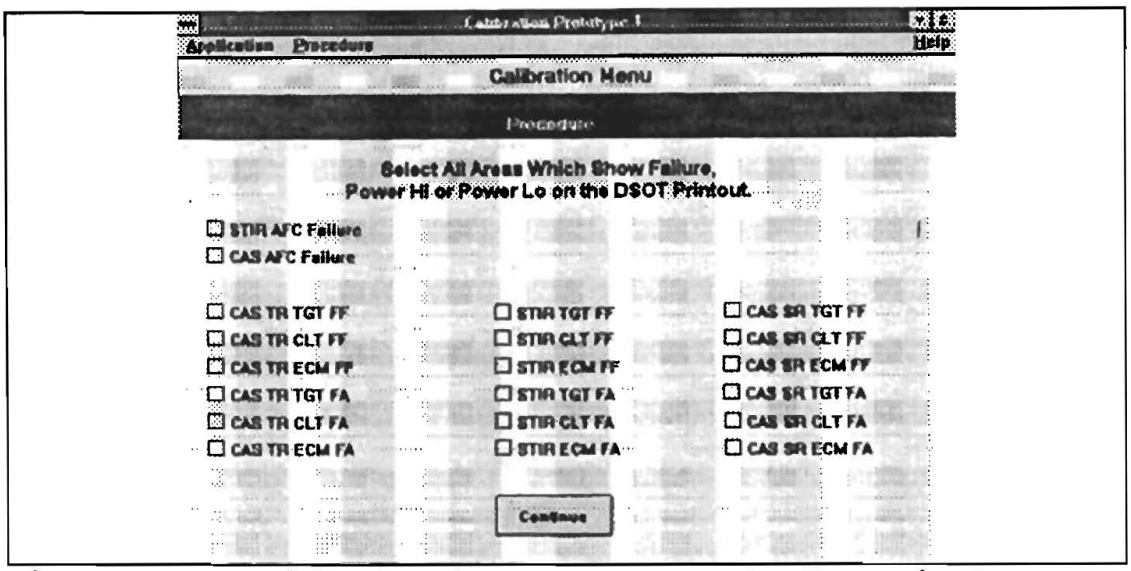

Figure 6 Printout Entry Menu User Interface Display

The user first checks off boxes corresponding to the indications on the DSOT printout. The system then analyzes the entries to determine which of the fifty-seven potential casualty conditions exist. The user is presented with a display showing which fault isolation paths will be taken, in prioritized order. The system returns to the Calibration Menu when the user completes the final fault isolation path.

As previously mentioned, in order to organize the Calibration Menu, the fifty-seven casualty conditions are split into eight groups. After path selection, Calibration Menu calls Cal Path Group Evaluation. Cal Path Group Evaluation identifies which groups have active casualty conditions, sets variables that will call the necessary groups, and returns to the Calibration Menu upon completion.

With the necessary Cal Path Groups identified, Calibration Menu directs each Path Group in turn to evaluate its conditions. Those conditions with a value of "true" will call the appropriate troubleshooting path. After all conditions within a Path Group are evaluated, control is returned to the Calibration Menu, which calls the next Path Group. This process continues until all casualty conditions have been addressed, at which time control is returned to the Main Menu.

The calibration design differs significantly from that of performance in both the logical and physical design. The calibration module contains a central master procedure that directs flow of the application through the use of two-way linking goal procedures.

IV. LESSONS LEARNED

This chapter discusses insights gained in using Adept and in designing and building an expert system. It is based on the experience of developing the calibration module of the MK92 Maintenance Advisor Expert System (MK92 MAES).

A. ADEPT EXPERT SYSTEM SHELL INSIGHTS

This section discusses lessons learned that pertain directly to the development tool used, SoftSell's Adept, and were not obvious from the documentation. The reader is assumed to have a basic understanding of the nature and elements of Adept. References (1), (2), and (5) may provide clarification on specific terms or features.

1. Goal Nodes vs. Result Nodes

Goal procedures will always return a value of "unknown" when their end nodes are not result nodes (e.g., display or calculation nodes). Goal procedures can call other goal procedures, resulting in a cascading flow of control. Goal procedures determine whether the called goal procedure has already been accomplished by checking its boolean value. If a value of "unknown" is encountered, then the called procedure may be executed. This point is critical to the module's ability to address multiple casualty conditions.

2. Display Objects and Variables

Buttons and list boxes in Adept displays are named "display objects". They can be referenced by subsequent nodes until another display is opened. To translate the user input into a permanent value that can be manipulated and accessed beyond the next display, variables must be used. Simple if-then-else statements in custom node scripts can assign variable values to reflect display object values. The

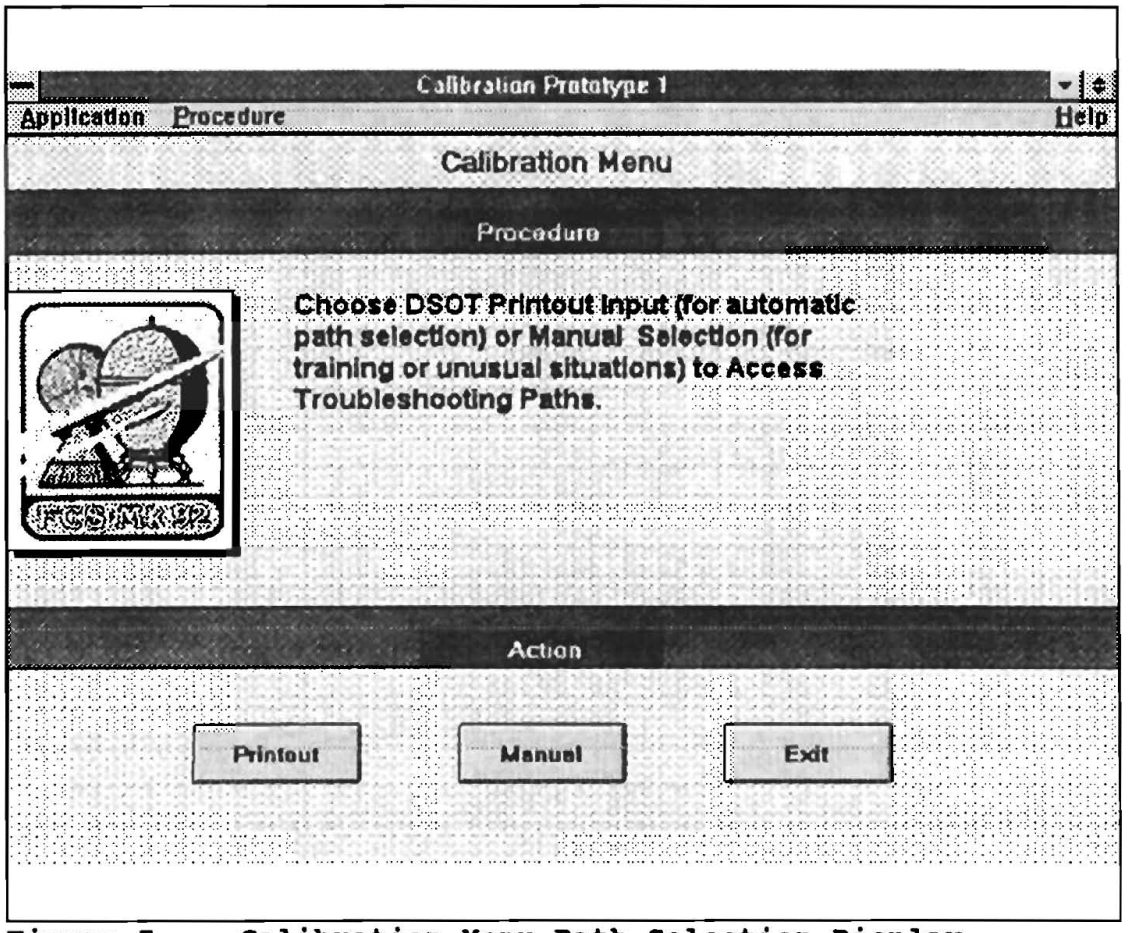

Figure 7 Calibration Menu Path Selection Display

"Action" section in the "Object Properties" dialog window refers to the three possible arcs out of the node. Selecting one of these action buttons has no effect on the boolean value of the button when it is pressed. Those values are determined strictly by selecting the button (true) or by not selecting it (false). For example, Figure 7 shows the path selection method screen from the Calibration Menu.

The "Printout" button is named "Printout" within the program. This is the display object name. This object has a default value of false when the display is opened. When the object is selected its value becomes true. The object can be referred to by name, and the boolean value can be used in a logical expression until a new display is opened.

3. List Boxes vs. Buttons

Offering the user a list box for selection among multiple choices is more concise and efficient than a collection of buttons. Buttons have limited space for labeling and the screen can only hold so many buttons. A list box allows fuller descriptions of each choice and scrolling provides extra space for more choices.

An earlier version of the interface used buttons to select a path from the manual menu. Because the path names were longer than the standard button size, button names were abbreviated, potentially confusing the user. Implementing the choice of twenty-seven different paths required three screens:

- one screen to choose between CAS, STIR, or All CAS and STIR Modes;
- one screen each for CAS paths and STIR paths.

The final version of the interface employs only one screen that uses a list box. The list box contains all the troubleshooting path options available in the module. Users can view all their options before selecting one path.

4. Display Text

Within the "Object Properties" dialog window for a text object is the option to use a scroll bar. This allows enough space for long descriptions, step-by-step instructions, or explanations within one display. Using this approach eliminates the need to chain together nodes simply because the textual information does not fit fully in one standard screen.

For example, the instructions describing how to conduct a specific test during fault isolation take up four 8.5" by 11" pages in the knowledge document. Using the scrolled text option allowed the inclusion of all those instructions in one display. Users can step forward and back through text at their discretion.

5. Utilization of Global Variables

Global variables can be used by "common" procedures to allow several paths to use the same code to isolate faults. They also provide a tool that can be used to coordinate and communicate between master and subordinate procedures. This aspect was essential to the design of the calibration module.

Figure 8 shows a common procedure's display and four global variables: Track_Search, Target_Clutter, Card1 and Card5.

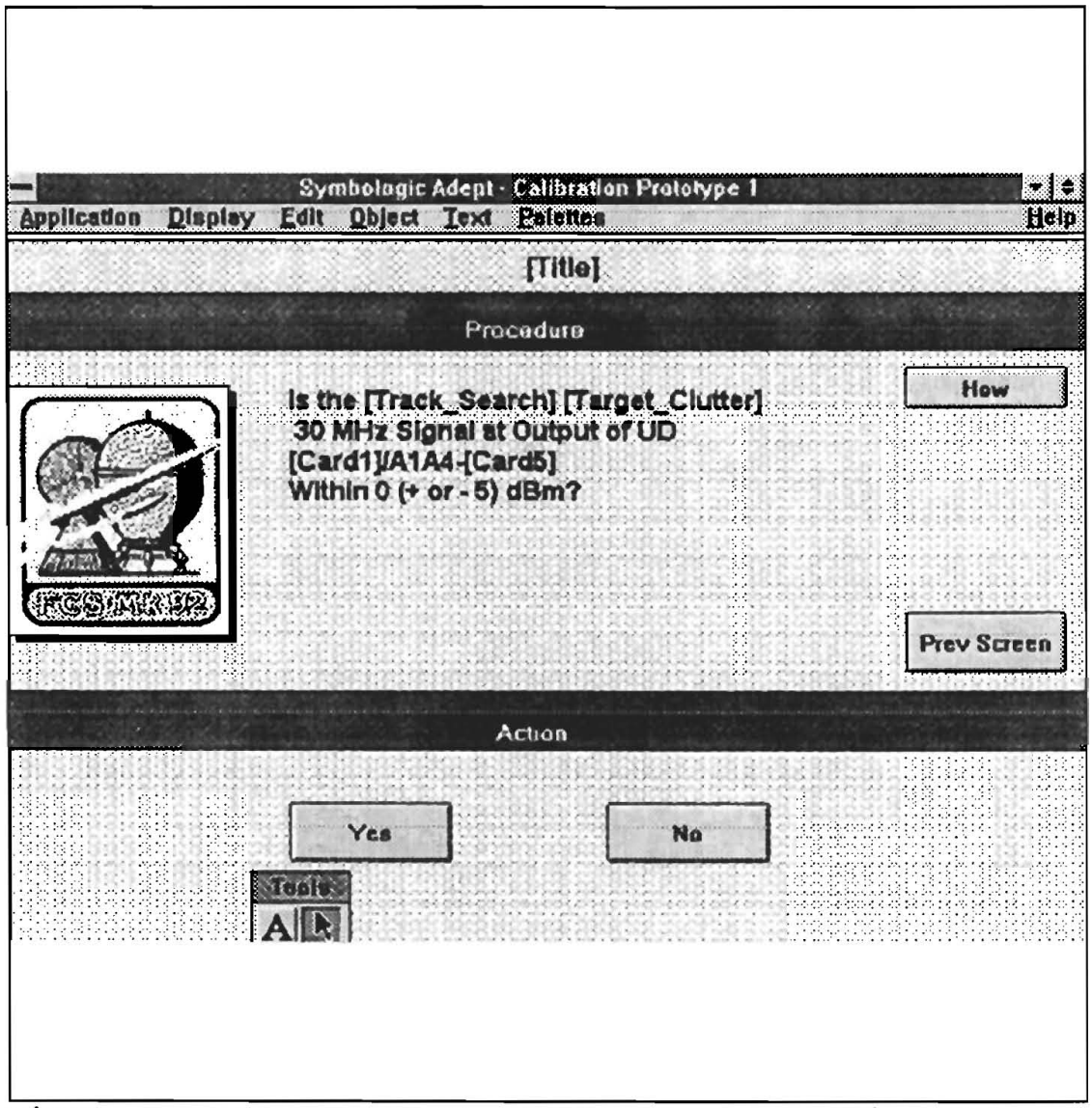

Figure 8 An Example of a Common Procedure Using Global Variables

6. Customizing Using Script Nodes

Figure 9 shows an Adept procedure. The highlighted node is a custom node containing the variables assignment. Custom node scripts should be limited to accomplish a reasonably small set of specific tasks. Dividing up even similar problems into a series of nodes creates a more maintainable software program. Adept's debugging feature can

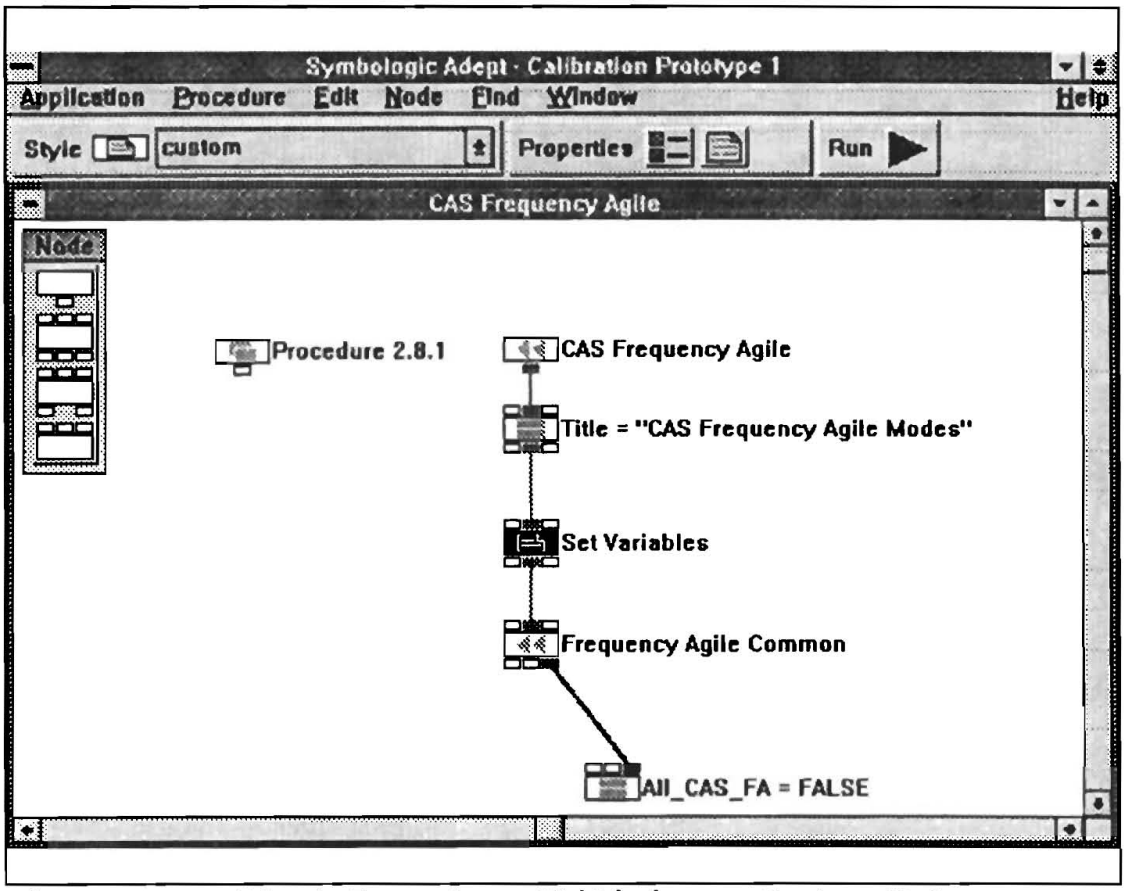

Figure 9 Adept Procedure Utilizing a Custom Node

isolate bugs more effectively in a series of nodes than in one catchall node.

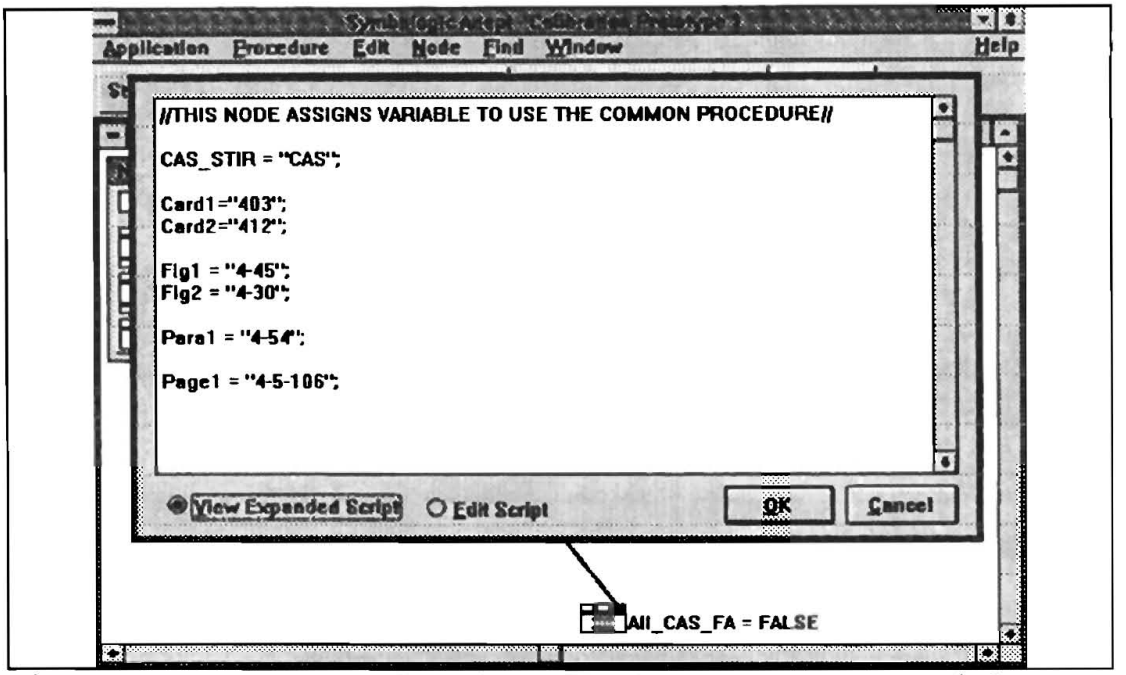

Figure 10 An Example of an Adept Custom Node Script

Custom node scripts allow the system developer to customize an application. Figure 10 is an example of a custom node script. It shows the assignment of values to global variables utilized by the procedure shown in Figure 9, CAS Frequency Agile.

7. Use of Descriptive Names

Names of procedures, variables, and display objects should be as descriptive as possible. With a thirty-two character length maximum there is no need to indulge in arcane abbreviations. Full names and real words make the application easier to understand, modify and maintain.

B. DESIGN AND IMPLEMENTATION

This section describes lessons learned that relate to the design process and the actual implementation of documented expert knowledge into a prototype expert system.

1. Overview Abstraction

Our implementation was greatly aided by initially abstracting an overall view of the expert knowledge, and subsequent macro examination of the application and its logical flow. Gathering the expert knowledge representation in one document led to the identification of common paths. It also revealed each of the twenty-seven paths as coherent wholes, i.e., they were not split up so they would conveniently fit on 8.5" x 11" pages for the purpose of filing them in a binder.

The immediate benefit from this approach was the ability to determine where the expert knowledge could be condensed into common procedures, and how the expert knowledge base was organized. Viewing the knowledge in that manner led to considering the module as a coherent whole that could and should work in a coordinated fashion to resolve all the DSOT calibration casualties indicated. The end result was a design that takes user input, analyzes it, determines the tasks necessary to accomplish its objective, proceeds through those tasks, and returns to a neutral state awaiting further tasking by the user.

2. Use of Common Procedures

Common paths were determined by comparing elements in the knowledge representation. Where identical "tree branches" were noted, the actual verbiage and action at matching decision points was compared to determine what words must be variables. Global variables were designated and placed within the common procedure. When a specific path that uses that procedure is called by the application, those variables are assigned the values that customize the common procedure for the given fault isolation path.

Common procedures resulted in an application size approximately sixty percent of what it would have been if each of the twenty-seven paths had been implemented as unique procedures. The domain expert recognized the similarities in the paths that became common procedures, as evidenced by his use of one path representation as a template for several others.

These lessons learned implicitly build on the experience of the performance module development. The implications for the continuing development of the MK92 MAES project suggest that some combination of our design and the performance module design will be employed for the final version. The follow-on group of graduate students will build on our experience in developing the calibration module and learn more about expert system development and the capabilities of Adept.

V. SUMMARY AND CONCLUSIONS

This chapter presents conclusions about our experience in the implementation of the calibration module of the MK92 Maintenance Advisor Expert System (MK92 MAES). It also discusses potential uses of expert system technology and the Adept expert system shell in other application areas of the Navy.

A. IMPLEMENTATION DESIGN

We designed the calibration module of the MK92 MAES as a goal driven Adept application. Common procedures are used as much as possible to eliminate redundant code. This approach led to a compact overall system that is easy to read, modify, maintain, and test.

We have also included an extensive help facility in the form of "how to" and "why" information provided by the domain expert. In addition, the ability to "page back" to the previous screen was added to help the user to backtrack to a previous entry to review a selection or correct any errors made in selecting a path.

The initial data entry by the user is accomplished through a screen that mimics the DSOT printout. The user simply marks the items from the DSOT printout. This data is then analyzed by the system to determine the indicated casualty conditions.

The system will then lead the user to specific troubleshooting paths. A manual selection path is also provided for the user. This option is particularly useful for training or troubleshooting unusual conditions.

Our design differs substantially from the implementation of the performance module. Appendix B provides a detailed discussion on the differences between the two. All calibration procedures below the Calibration Menu are Adept goal procedures, not result procedures. Our paths are designed to be selected through analysis of indicated system failures, rather than through successive menus that force users to decide where the problem lies.

Our design gives the user an application that reveals only the three logical levels: path selection method, path selection, and fault isolation, while giving the maintainer a system built in functionally discrete elements on six physical levels. The maintenance and end-user application of the module are both enhanced. Calibration can be viewed as one process, executed by a master procedure that coordinates subordinate procedures as needed.

B. CONTINUING MK92 MAES ISSUES

This section covers issues pertaining to the MK92 MAES that need to be addressed in the future. Some of these issues are already being addressed by the MK92 MAES project team.

1. Validation, Verification and Testing

The system (calibration and performance modules) still requires complete validation, verification and testing. The verification process calls for a thorough review of the expert knowledge base by independent experts. The validation process involves ensuring the accurate implementation of this expertise in the knowledge base. To this point the project could still be considered a prototype. It still needs extensive testing to refine the interface and provide additional features that will make this system effective and efficient.

2. Additional Functionality.

Some additional features for the system that are desirable but not implemented in the calibration module included:

- a working interface between Adept displays and the relational database for part and replacement information;
- the ability to retrace the user's path during fault isolation;
- the ability to create a historical record of the user session for trend analysis and interrupted sessions.

Using structured methodologies, the organization and content of Adept procedures could be further improved for better readability, maintainability, modifiability, and reuse. There may be design enhances similar to our use of Adept goals and common procedures to be achieved. Only continued focus on

the design process, structured methodologies, and the overall functionality of the MK92 MAES will yield those innovations.

3. Standardization of Calibration and Performance Modules

Some inconsistencies between the calibration and performance modules, as implemented, must be resolved before the two modules can be integrated. The display layout for the two modules differs slightly from each other:

1) calibration uses the Arial font and places text top and left justified, versus performance's San Serif, center-center justified text.

2) the bitmap object, MK92 logo, in the foreground of performance displays is moved to the background, flush with the left screen border in calibration displays (this is very significant because an Adept application shares a common background throughout all its displays).

3) the help feature in performance is accessed by a help button in the "action" portion of the standard screen (Figure 11), whereas calibration help has explicit buttons

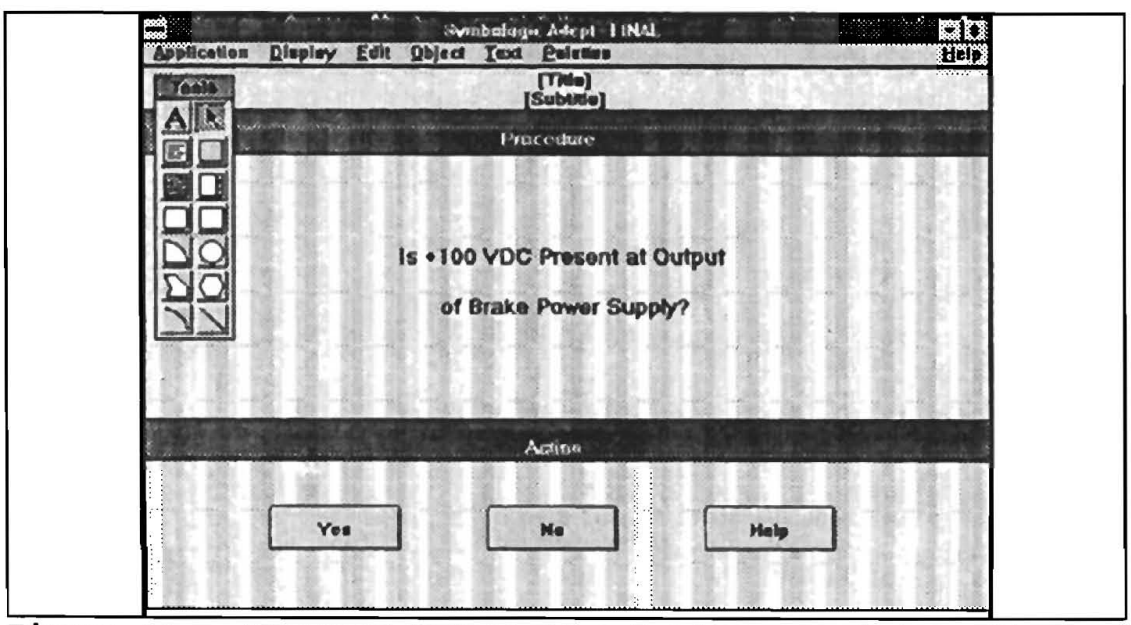

Figure 11 Standard Format of a Performance Module Display

for "how", "why", and "parts information" that are positioned in the Procedure (middle) section of the display (Figure 12).

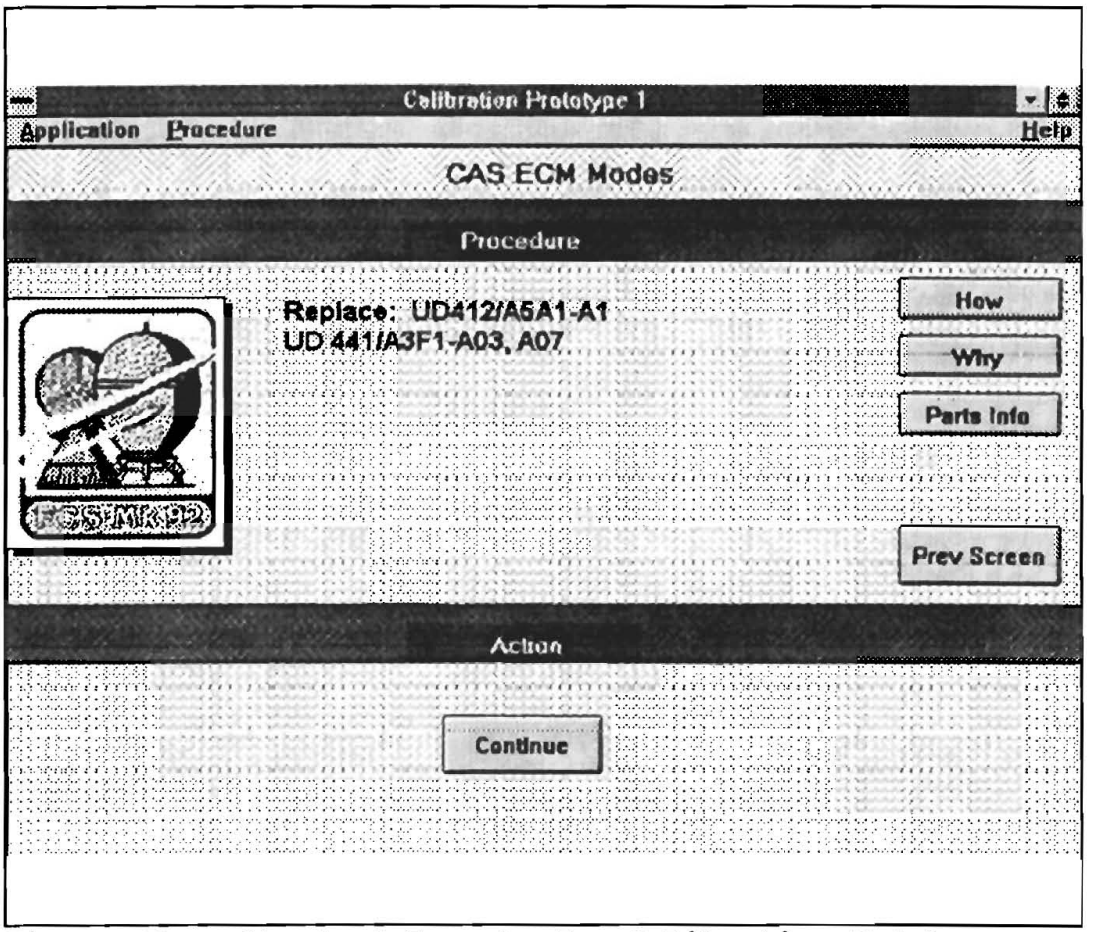

Figure 12 Standard Format of a Calibration Module Display

The performance module should be revised to better use common procedures. This approach would eliminate redundant code, thus decreasing the module's overall size and improving system performance. Additionally, an approach similar to the one used for the calibration module for initial entry of casualty conditions could be used. This approach could

eliminate some of the menu levels presently used to direct the troubleshooting. It may be possible to redesign the performance module as a two-way linked hierarchy (using goal nodes) instead of the current one-way linking.

4. Direct Casualty Input Interface

The calibration module uses a screen that mimics the DSOT printout to elicit input on MK92 system calibration status from the user. This information is already in digital form and could, theoretically at least, be routed to the expert system directly. In addition to time savings and accuracy, the implications of that kind of interface include the potential for creating a historical record of system indications that include trends as well as outright failures. Analysis of these trends could allow prediction of impending critical failures.

C. OTHER EXPERT SYSTEMS

There is a need to exploit available expert system technology to enhance the knowledge, readiness, and cost-effectiveness of Navy personnel and systems. Downsizing the Navy increases the need for every ship, station and aircraft that remains in that reduced force to be maintained and operated at the highest level of readiness possible.

Every area, from combat systems to communications to personnel and financial management could benefit from having expertise more widely distributed. Every inspection and assist team, every policy setting organization should examine

how they might use expert systems to diffuse knowledge of how to perform their jobs efficiently and effectively. If experts can write down their ways to accomplish a task, and their rules of thumb, an expert system can be used to show anyone how to accomplish that task. Some potential areas are:

- administrative separations;
- legal administration;
- budget formulation;
- transition assistance;
- Maintenance, Material Management System;
- combat systems;
- hull, mechanical, and electrical systems;
- aircraft maintenance.

The expert systems deployed need not be enormous in scope or size to be cost effective. The MK92 MAES illustrates the level of complexity that can be addressed, but high complexity is not a prerequisite for an effective expert system. The savings in personnel resources consumed by a given task can be realized in even rudimentary expert systems if there is a knowledge base that is presently unaccessible to potential users.

D. SUMMARY

This thesis described the design and implementation of the calibration module of the MK92 MAES. It is the continuation of the software development project initiated by NSWC, Port Hueneme in 1992, and involved Naval Postgraduate School

faculty and students. The performance module was implemented by a previous development team at NPS. Follow-on project team members will integrate the performance and calibration modules, perform an independent validation, verification, and testing of the integrated modules of the system, and determine the implementation alternatives for shipboard deployment.

We determined that the design of the calibration module should be built as a top-down hierarchy of cohesive and loosely coupled procedures. Similar logical paths were integrated into common procedures that can be called by several different troubleshooting procedures. New standards for the user interface design are proposed to enhance the user abilities to interact with the system.

We delivered a working prototype calibration module for the MK92 MAES that implements the domain expertise with all of the functional and design attributes identified by NSWC and NPS. Preliminary evaluation of the module indicates that the essential organization and behavior of the system in practice meets the expectations of NSWC, Port Hueneme and NPS.

APPENDIX A

MK92 MAES (CALIBRATION)

This appendix provides a detailed listing of Adept procedures for the calibration portion of the MK92 MAES. Each procedure is listed with a description of its functions, the procedures it is called by, the procedures it calls, and a reference to its corresponding diagnostic tree diagram drawn by the expert.

Procedures are arranged as a top-down hierarchy. There are fifty-nine procedures arranged into six physical levels. Each procedure has a unique name, by which it is identified within the application. A hierarchical numbering scheme is used to number the procedures. Each procedure is identified by its parent procedure that calls it and a unique number within that parent. Where a procedure is called by more than one procedure, an "x" is used for that higher level parent.

For example, the procedure number for Target or Clutter Common, 2.x.x.8, indicates that it is called by more than one procedure (2.x.4, 2.x.5, 2.x.8, 2.x.9, 2.x.11, and 2.x.12) and these procedures are themselves called by several procedures. (See Figure 13).

The Calibration Menu is designed to be called by the Main Menu of the MK92 MAES. All procedures below the Calibration Menu are called only as necessary. Figure 13 shows the layout

of all fifty-nine procedures, grouped by level, with all connections between calling procedures shown by solid lines. All connections are two-way, reflecting Adept goal nodes. The MK92 Begin and Main Menu procedures are not listed here because they were developed by the Performance module team.

To increase the readability of the procedures diagram and facilitate their maintenance, a dummy "begin" display node is added at the top of each procedure. This node has the procedure number as its title and contains a detailed description on the functionality of the node.

AREA LEVEL

(2.0) Calibration Menu

SUB-AREA LEVEL

(2.1) Manual Menu
(2.2) Printout Entry Menu
(2.3) Cal Path Group Evaluation
(2.4) Cal Paths A
(2.5) Cal Paths B
(2.6) Cal Paths C
(2.7) Cal Paths D
(2.8) Cal Paths E
(2.9) Cal Paths F
(2.10) Cal Paths G
(2.11) Cal Paths H

PATH LEVEL

(2.4.1) All CAS and STIR
(2.4.2) CAS AFC
(2.4.3) All CAS Modes
(2.4.4) CAS Fixed Frequency
(2.4.5) All CAS Search
(2.6.1) All CAS Track
(2.7.1) STIR AFC
(2.7.2) All STIR Modes
(2.7.3) STIR Fixed Frequency
(2.8.1) CAS Frequency Agile
(2.10.1) STIR Frequency Agile
(2.11.1) All CAS ECM
(2.11.2) CAS Search ECM
(2.11.3) CAS Track ECM
(2.11.4) STIR Track ECM
(2.x.1) All CAS Non-ECM
(2.x.2) CAS Search FF xor FA
(2.x.3) CAS Search Target and Clutter
(2.x.4) CAS Search Target
(2.x.5) CAS Search Clutter
(2.x.6) CAS Track FF xor FA
(2.x.7) CAS Track Target and Clutter
(2.x.8) CAS Track Target
(2.x.9) CAS Track Clutter
(2.x.10) STIR Track Target and Clutter
(2.x.11) STIR Track Target
(2.x.12) STIR Track Clutter

PATH ELEMENT/COMMON LEVEL

Path Elements

(2.4.3.1) All CAS Modes No OFFLINE Light
(2.7.2.1) All STIR Modes No OFFLINE Light

Common

(2.x.x.1)	AFC Common
(2.x.x.2)	All Modes Common
(2.x.x.3)	Fixed Frequency Common
(2.x.x.4)	Frequency Agile Common
(2.x.x.5)	FF and FA Common
(2.x.x.6)	FF xor FA Common
(2.x.x.7)	Target and Clutter Common
(2.x.x.8)	Target or Clutter Common
(2.11.x.9)	ECM Common

PATH SUB-ELEMENT/COMMON ELEMENT LEVEL

Path Sub-Elements

(2.7.2.1.1)	All STIR Modes Power Head Cal
(2.7.2.1.2)	All STIR Modes Mixer Output Cal

Common Elements

(2.x.x.1.1)	AFC Common AFC Forced Lamp On
(2.x.x.5.1)	FF and FA Mixer Output Check
(2.x.x.5.2)	FF and FA Power Head in Spec

PATH SUB-SUB ELEMENT/COMMON SUB-ELEMENT LEVEL

Path Sub-Sub-Elements

(2.7.2.1.2.1)	All STIR Modes Mixer Cal

Common Sub-Elements

(2.x.x.1.1.1)	AFC Mag Sample Not In Spec
(2.x.x.5.2.1)	FF and FA Power Head Search Path
(2.x.x.5.2.2)	FF and FA Power Head Track Path

Figure 13: Calibration Procedures

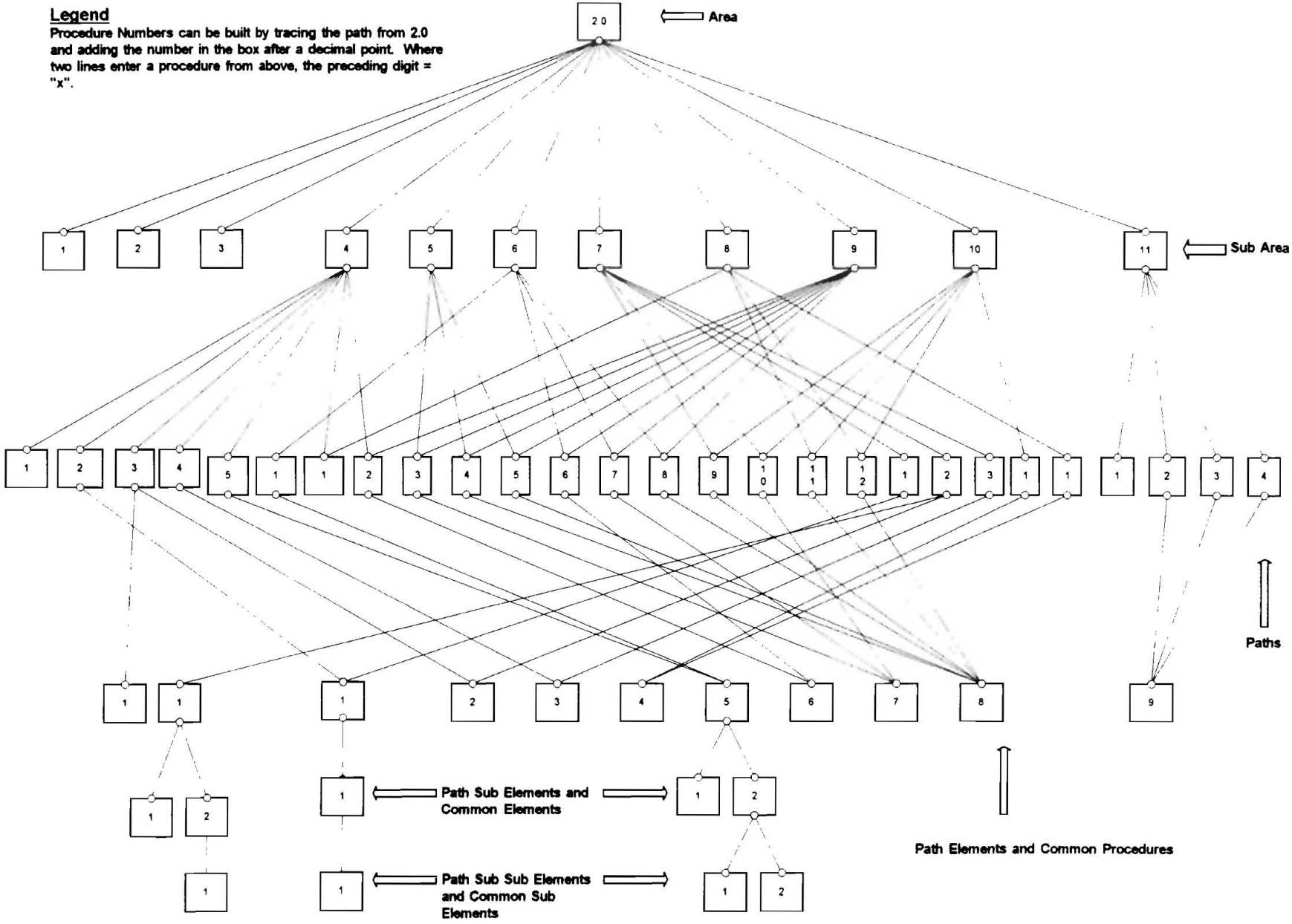

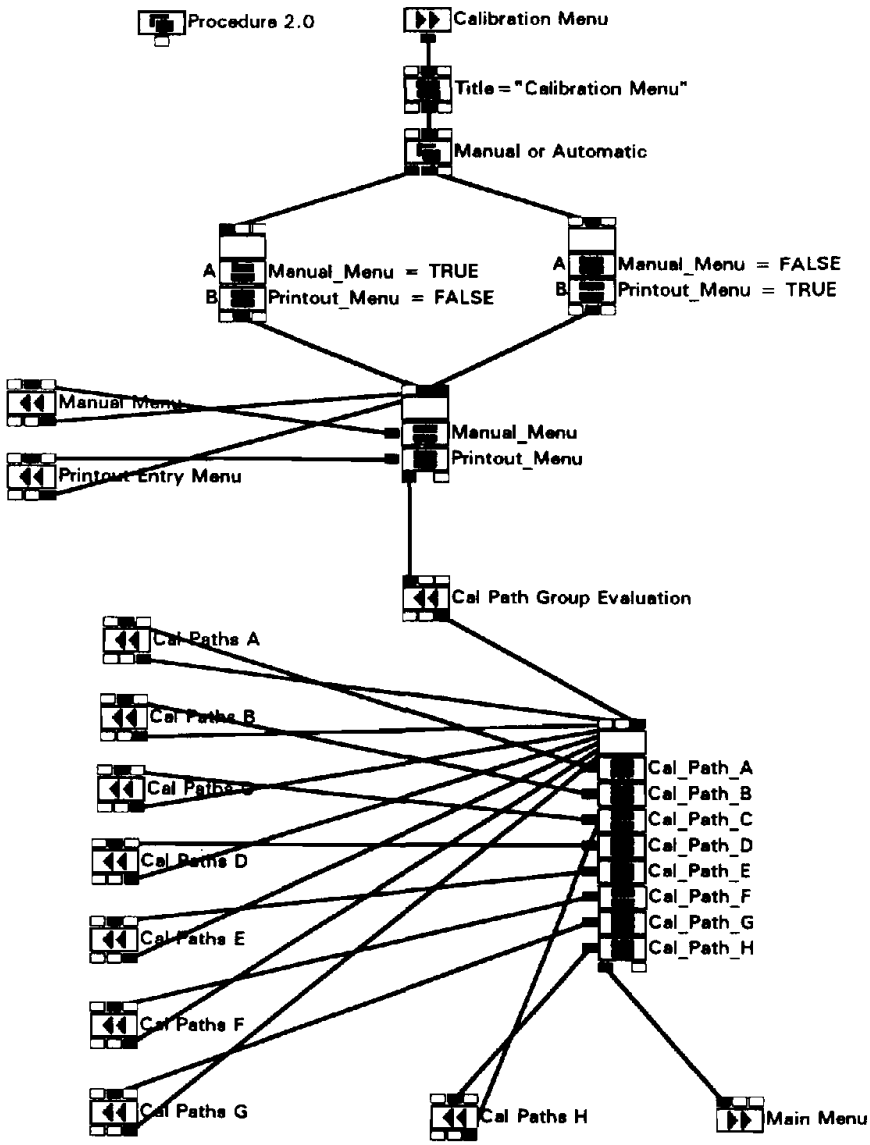
Procedure 2.0
Calibration Menu
Title = "Calibration Menu"
Manual or Automatic
A
B
Manual_Menu = TRUE
Printout_Menu = FALSE
A
B
Manual_Menu = FALSE
Printout_Menu = TRUE
Manual Menu
Printout Entry Menu
Manual_Menu
Printout_Menu
Cal Path Group Evaluation
Cal Paths A
Cal Paths B
Cal Paths C
Cal Paths D
Cal Paths E
Cal Paths F
Cal Paths G
Cal Paths H
Cal_Path_A
Cal_Path_B
Cal_Path_C
Cal_Path_D
Cal_Path_E
Cal_Path_F
Cal_Path_G
Cal_Path_H
Main Menu

Name:	**CALIBRATION MENU**
Number:	2.0
Description:	This procedure prompts the user to choose Manual (Manual Menu) or Automatic (Printout Entry Menu) selection. After the user chooses, the Calibration Menu calls the Cal Path Group Evaluation procedure to determine what casualty conditions were indicated by the user. Cal Paths A through H are called in order so as to implement the required troubleshooting priorities.
Called By:	Main Menu
Calls:	Manual Menu, Printout Entry Menu, Cal Path Group Evaluation, Cal Paths A, Cal Paths B, Cal Paths C, Cal Paths D, Cal Paths E, Cal Paths F, Cal Paths G, Cal Paths H.
Expert Drawing:	There is no corresponding Expert Drawing page number.

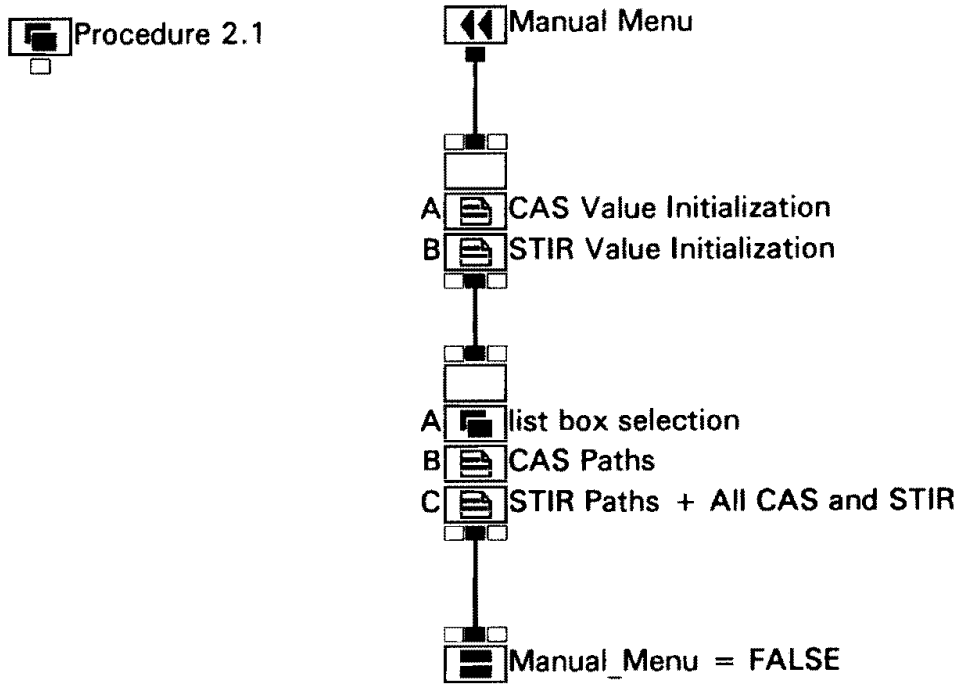
Procedure 2.1
Manual Menu
A
CAS Value Initialization
B
STIR Value Initialization
A
list box selection
B
CAS Paths
C
STIR Paths + All CAS and STIR
Manual_Menu = FALSE

Name: **MANUAL MENU**
Number: 2.1
Description: This procedure allows the user to select one troubleshooting path from a list box of 27 choices.
Called By: Calibration Menu
Calls: None
Expert Drawing: There is no directly corresponding Expert Drawing Page, but it can be seen as an amalgam of SH2, SH2E, SH2L, SH3, and SH3E.

CUSTOM NODE SCRIPTS

CAS VALUE INITIALIZATION

```
CAS_AFC = FALSE;

All_CAS_Modes = FALSE;
All_CAS_FF = FALSE;
All_CAS_FA = FALSE;
All_CAS_ECM = FALSE;
All_CAS_ECM_FF = FALSE;
All_CAS_ECM_FA = FALSE;
All_CAS_Non_ECM = FALSE;
All_CAS_Non_ECM_FF = FALSE;
All_CAS_Non_ECM_FA = FALSE;

CAS_Track = FALSE;
CAS_Track_FF = FALSE;
CAS_Track_FA = FALSE;
CAS_Track_Target_and_Clutter = FALSE;
CAS_Track_Target_and_Clutter_FF = FALSE;
CAS_Track_Target_and_Clutter_FA = FALSE;
CAS_Track_Target = FALSE;
CAS_Track_Target_FF =FALSE;
CAS_Track_Target_FA = FALSE;
CAS_Track_Clutter = FALSE;
CAS_Track_Clutter_FF = FALSE;
CAS_Track_Clutter_FA = FALSE;
CAS_Track_ECM = FALSE;
CAS_Track_ECM_FF = FALSE;
CAS_Track_ECM_FA = FALSE;

CAS_Search = FALSE;
CAS_Search_FF = FALSE;
CAS_Search_FA = FALSE;
CAS_Search_Target_and_Clutter = FALSE;
CAS_Search_Target_and_Clutter_FF = FALSE;
CAS_Search_Target_and_Clutter_FA = FALSE;
CAS_Search_Target = FALSE;
```

```
    CAS_Search_Target_FF = FALSE;
    CAS_Search_Target_FA = FALSE;
    CAS_Search_Clutter = FALSE;
    CAS_Search_Clutter_FF = FALSE;
    CAS_Search_Clutter_FA = FALSE;
    CAS_Search_ECM = FALSE;
    CAS_Search_ECM_FF = FALSE;
    CAS_Search_ECM_FA = FALSE;

    All_CAS_and_STIR = FALSE;
-------------------------------------------
```

STIR VALUE INITIALIZATION

```
    STIR_AFC = FALSE;
    All_STIR_Modes = FALSE;
    All_STIR_FF = FALSE;
    All_STIR_FA = FALSE;

    STIR_Track_Target_and_Clutter = FALSE;
    STIR_Track_Target_and_Clutter_FF = FALSE;
    STIR_Track_Target_and_Clutter_FA = FALSE;

    STIR_Track_Target = FALSE;
    STIR_Track_Target_FF = FALSE;
    STIR_Track_Target_FA = FALSE;

    STIR_Track_Clutter = FALSE;
    STIR_Track_Clutter_FF = FALSE;
    STIR_Track_Clutter_FA = FALSE;

    STIR_Track_ECM = FALSE;
    STIR_Track_ECM_FF = FALSE;
    STIR_Track_ECM_FA = FALSE;

    No_Match = FALSE;
-------------------------------------------
```

CAS PATHS

```
if [Path] == "CAS AFC" then CAS_AFC = TRUE;
if [Path] == "All CAS Modes" then All_CAS_Modes = TRUE;
if [Path] == "All CAS FF" then All_CAS_FF = TRUE;

if [Path] == "All CAS FA" then All_CAS_FA = TRUE;
if [Path] == "All CAS Non ECM" then All_CAS_Non_ECM = TRUE;
if [Path] == "All CAS ECM" then All_CAS_ECM = TRUE;
if [Path] == "All CAS Track" then CAS_Track = TRUE;
if [Path] == "CAS Track FF or FA (not both)" then
          CAS_Track_FF = TRUE;

if [Path]=="CAS Track Target and Clutter"  then
          CAS_Track_Target_and_Clutter=TRUE;
```

```
if [Path] == "CAS Track Target" then CAS_Track_Target =
          TRUE;
if [Path] == "CAS Track Clutter" then CAS_Track_Clutter=
          TRUE;
if [Path] == "CAS Track ECM" then CAS_Track_ECM = TRUE;
if [Path] == "All CAS Search" then CAS_Search = TRUE;
if [Path] ==  "CAS Search FF or FA (not both)" then
          CAS_Search_FF = TRUE;
if [Path]=="CAS Search Target and Clutter" then
          CAS_Search_Target_and_Clutter=TRUE;
if [Path] == "CAS Search Target" then CAS_Search_Target =
          TRUE;
if [Path] == "CAS Search Clutter" then CAS_Search_Clutter =
          TRUE;
if [Path] == "CAS Search ECM" then CAS_Search_ECM = TRUE;
```

STIR PATHS + ALL CAS AND STIR

```
if [Path] == "STIR AFC" then STIR_AFC = TRUE;
if [Path] == "All STIR Modes" then All_STIR_Modes = TRUE;
if [Path] == "All STIR FF" then All_STIR_FF = TRUE;
if [Path] == "All STIR FA" then All_STIR_FA = TRUE;
if [Path] == "STIR Track Target and Clutter" then
          STIR_Track_Target_and_Clutter=TRUE;
if [Path] == "STIR Track Target" then STIR_Track_Target =
          TRUE;
if [Path] == "STIR Track Clutter" then STIR_Track_Clutter =
          TRUE;
if [Path] == "STIR Track ECM" then STIR_Track_ECM = TRUE;
if [Path] == "All CAS and STIR" then All_CAS_and_STIR = TRUE
```

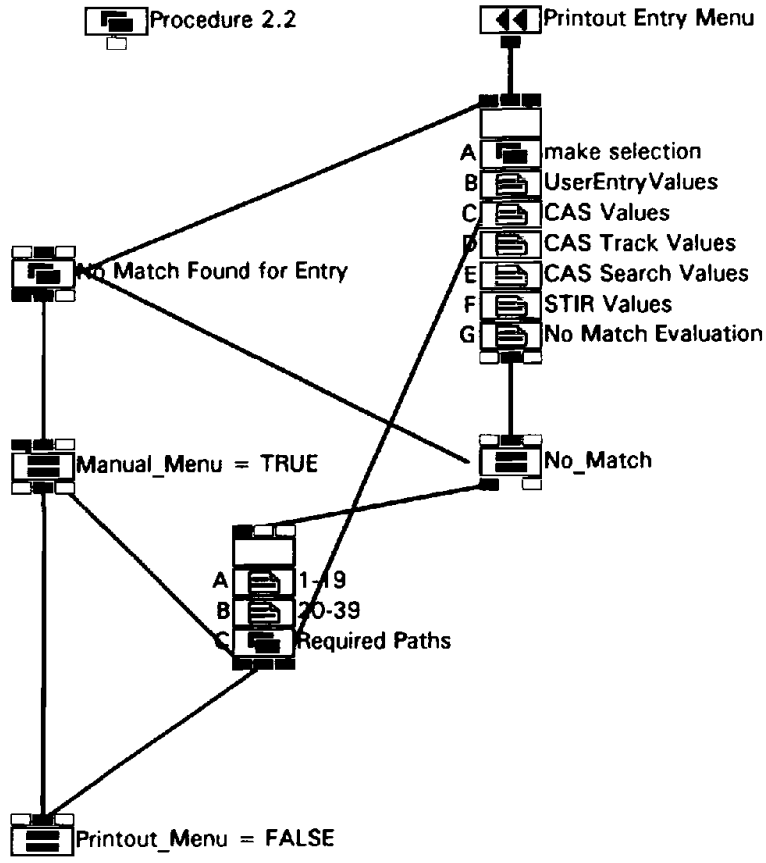
Procedure 2.2
Printout Entry Menu
A make selection
B UserEntryValues
C CAS Values
D CAS Track Values
E CAS Search Values
F STIR Values
G No Match Evaluation
No Match Found for Entry
Manual_Menu = TRUE
No_Match
A 1-19
B 20-39
C Required Paths
Printout_Menu = FALSE

Name:	**PRINTOUT ENTRY MENU**
Number:	2.2
Description:	The user enters data via a screen that mimics the DSOT printout. The display object values are analyzed to determine if conditions are met for each of the 57 individual and discrete casualty conditions and assigns variable values accordingly.
Called By:	Calibration Menu
Calls:	None
Expert Drawing:	There is no corresponding Expert Drawing page number.

CUSTOM NODE SCRIPTS

USER ENTRY VALUES

```
if [CAS AFC] == TRUE then
    CAS_AFC = TRUE
else
    CAS_AFC = FALSE;
if [STIR AFC] == TRUE then
    STIR_AFC = TRUE
else
    STIR_AFC = FALSE;
if [a] == TRUE then
    CAS_TR_TGT_FF = TRUE
else
    CAS_TR_TGT_FF = FALSE;
if [b] == TRUE then
    CAS_TR_CLT_FF = TRUE
else
    CAS_TR_CLT_FF = FALSE;
if [c] == TRUE then
    CAS_TR_ECM_FF = TRUE
else
    CAS_TR_ECM_FF = FALSE;
if [d] == TRUE then
    CAS_TR_TGT_FA = TRUE
else
    CAS_TR_TGT_FA = FALSE;
if [e] == TRUE then
    CAS_TR_CLT_FA = TRUE
else
    CAS_TR_CLT_FA  = FALSE;
if [f] == TRUE then
    CAS_TR_ECM_FA = TRUE
else
```

```
    CAS_TR_ECM_FA = FALSE;
if [g] == TRUE then
    CAS_SR_TGT_FF = TRUE
else
    CAS_SR_TGT_FF = FALSE;
if [h] == TRUE then
    CAS_SR_CLT_FF = TRUE
else
    CAS_SR_CLT_FF = FALSE;
if [i] == TRUE then
    CAS_SR_ECM_FF = TRUE
else
    CAS_SR_ECM_FF= FALSE;
if [j] == TRUE then
    CAS_SR_TGT_FA = TRUE
else
    CAS_SR_TGT_FA = FALSE;
if [k] == TRUE then
    CAS_SR_CLT_FA= TRUE
else
    CAS_SR_CLT_FA = FALSE;
if [l] == TRUE then
    CAS_SR_ECM_FA = TRUE
else
    CAS_SR_ECM_FA = FALSE;
if [a1] == TRUE then
    STIR_TGT_FF = TRUE
else
    STIR_TGT_FF = FALSE;
if [b1] == TRUE then
    STIR_CLT_FF = TRUE
else
    STIR_CLT_FF = FALSE;
if [c1] == TRUE then
    STIR_ECM_FF = TRUE
else
    STIR_ECM_FF = FALSE;
if [d1] == TRUE then
    STIR_TGT_FA = TRUE
else
    STIR_TGT_FA = FALSE;
if [e1] == TRUE then
    STIR_CLT_FA = TRUE
else
    STIR_CLT_FA = FALSE;
if [f1] == TRUE then
    STIR_ECM_FA = TRUE
else
    STIR_ECM_FA = FALSE;

-----------------------------------------
```

CAS VALUES

```
if [a]&[b]&[c]&[d]&[e]&[f]&[g]&[h]&[i]&[j]&[k]&[l]&[a1]&[b1]
    &[c1]&[d1]&[e1]&[f1] == TRUE
then
    All_CAS_and_STIR = TRUE
else
    All_CAS_and_STIR = FALSE;
if [CAS AFC] == TRUE
then
    CAS_AFC = TRUE
else
    CAS_AFC = FALSE;
if [a]&[b]&[c]&[d]&[e]&[f]&[g]&[h]&[i]&[j]&[k]&[l] &
    !All_CAS_and_STIR ==TRUE
then
    All_CAS_Modes = TRUE
else
    All_CAS_Modes = FALSE;
if [a]&[b]&[c]&[g]&[h]&[i] & !All_CAS_and_STIR &
    !All_CAS_Modes == TRUE
then
    All_CAS_FF = TRUE
else
    All_CAS_FF = FALSE;
if [d]&[e]&[f]&[j]&[k]&[l] & !All_CAS_and_STIR &
    !All_CAS_Modes == TRUE
then
    All_CAS_FA = TRUE
else
    All_CAS_FA = FALSE;
if [c]&[i]&[f]&[l] & !All_CAS_and_STIR & !All_CAS_Modes ==
    TRUE
then
    All_CAS_ECM = TRUE
else
    All_CAS_ECM = FALSE;

if [c]&[i] & !All_CAS_and_STIR & !All_CAS_Modes &
    !All_CAS_FF & !All_CAS_ECM == TRUE
then
    All_CAS_ECM_FF = TRUE
else
    All_CAS_ECM_FF = FALSE;
if [f]&[l] & !All_CAS_and_STIR & !All_CAS_Modes &
    !All_CAS_FA & !All_CAS_ECM == TRUE
then
    All_CAS_ECM_FA = TRUE
else
    All_CAS_ECM_FA = FALSE;
```

```
if [a]&[b]&[g]&[h]&[d]&[e]&[j]&[k] & !All_CAS_and_STIR &
    !All_CAS_Modes== TRUE
then
    All_CAS_Non_ECM = TRUE
else
    All_CAS_Non_ECM = FALSE;
if [a]&[b]&[g]&[h] & !All_CAS_and_STIR & !All_CAS_Modes &
    !All_CAS_FF & !All_CAS_Non_ECM == TRUE
then
    All_CAS_Non_ECM_FF = TRUE
else
    All_CAS_Non_ECM_FF = FALSE;
if [d]&[e]&[j]&[k] & !All_CAS_and_STIR & !All_CAS_Modes &
    !All_CAS_FA & !All_CAS_Non_ECM == TRUE
then
    All_CAS_Non_ECM_FA = TRUE
else
    All_CAS_Non_ECM_FA = FALSE;

-------------------------------------------
```

CAS TRACK VALUES

```
if  [a]&[b]&[c]&[d]&[e]&[f] & !All_CAS_and_STIR &
    !All_CAS_Modes== TRUE
then
    CAS_Track = TRUE
else
    CAS_Track = FALSE;
if [a]&[b]&[c] & !All_CAS_and_STIR & !All_CAS_Modes &
    !All_CAS_FF & !CAS_Track == TRUE
then
    CAS_Track_FF = TRUE
else
    CAS_Track_FF = FALSE;
if [d]&[e]&[f] & !All_CAS_and_STIR & !All_CAS_Modes &
    !All_CAS_FA & !CAS_Track == TRUE
then
    CAS_Track_FA = TRUE
else
    CAS_Track_FA = FALSE;
if [a]&[b]&[d]&[e] & !All_CAS_and_STIR & !All_CAS_Modes &
    !All_CAS_Non_ECM & !CAS_Track == TRUE
then
    CAS_Track_Target_and_Clutter = TRUE
else
    CAS_Track_Target_and_Clutter = FALSE;
if [a]&[b] & !All_CAS_and_STIR & !All_CAS_Modes &
    !All_CAS_FF & !All_CAS_Non_ECM & !All_CAS_Non_ECM_FF &
    !CAS_Track & !CAS_Track_FF &
    !CAS_Track_Target_and_Clutter == TRUE
then
```

```
    CAS_Track_Target_and_Clutter_FF = TRUE
else
    CAS_Track_Target_and_Clutter_FF = FALSE;
if [d]&[e] & !All_CAS_and_STIR & !All_CAS_Modes &
    !All_CAS_FA & !All_CAS_Non_ECM & !All_CAS_Non_ECM_FA &
    !CAS_Track & !CAS_Track_FA &
    !CAS_Track_Target_and_Clutter == TRUE
then
    CAS_Track_Target_and_Clutter_FA = TRUE
else
    CAS_Track_Target_and_Clutter_FA = FALSE;
if [a]&[d] & !All_CAS_and_STIR & !All_CAS_Modes &
    !All_CAS_Non_ECM & !CAS_Track &
    !CAS_Track_Target_and_Clutter == TRUE
then
    CAS_Track_Target = TRUE
else
    CAS_Track_Target = FALSE;
if [a] & !All_CAS_and_STIR & !All_CAS_Modes & !All_CAS_FF &
    !CAS_Track & !CAS_Track_FF & !All_CAS_Non_ECM &
    !All_CAS_Non_ECM_FF & !CAS_Track_Target_and_Clutter &
    !CAS_Track_Target_and_Clutter_FF & !CAS_Track_Target ==
    TRUE
 then
    CAS_Track_Target_FF = TRUE
else
    CAS_Track_Target_FF = FALSE;
if [d] & !All_CAS_and_STIR & !All_CAS_Modes & !All_CAS_FA &
    !CAS_Track & !CAS_Track_FA & !All_CAS_Non_ECM &
    !All_CAS_Non_ECM_FA & !CAS_Track_Target_and_Clutter &
    !CAS_Track_Target_and_Clutter_FA & !CAS_Track_Target ==
    TRUE
then
    CAS_Track_Target_FA = TRUE
else
    CAS_Track_Target_FA = FALSE;
if [b]&[e] &  !All_CAS_and_STIR & !All_CAS_Modes &
    !All_CAS_Non_ECM & !CAS_Track &
    !CAS_Track_Target_and_Clutter == TRUE
then
    CAS_Track_Clutter = TRUE
else
    CAS_Track_Clutter = FALSE;
if [b] & !All_CAS_and_STIR & !All_CAS_Modes & !All_CAS_FF &
    !CAS_Track & !CAS_Track_FF & !All_CAS_Non_ECM &
    !All_CAS_Non_ECM_FF & !CAS_Track_Target_and_Clutter &
    !CAS_Track_Target_and_Clutter_FF &
    !CAS_Track_Clutter == TRUE
then
    CAS_Track_Clutter_FF = TRUE
else
    CAS_Track_Clutter_FF = FALSE;
```

```
if [e] & !All_CAS_and_STIR & !All_CAS_Modes & !All_CAS_FA &
    !CAS_Track & !CAS_Track_FA & !All_CAS_Non_ECM &
    !All_CAS_Non_ECM_FA & !CAS_Track_Target_and_Clutter &
    !CAS_Track_Target_and_Clutter_FA & !CAS_Track_Clutter ==
    TRUE
then
    CAS_Track_Clutter_FA = TRUE
else
    CAS_Track_Clutter_FA = FALSE;
if [c]&[f] & !All_CAS_and_STIR & !All_CAS_Modes &
    !All_CAS_ECM & !CAS_Track == TRUE
then
    CAS_Track_ECM = TRUE
else
    CAS_Track_ECM = FALSE;
if [c] & !All_CAS_and_STIR & !All_CAS_Modes & !All_CAS_FF &
    !All_CAS_ECM & !All_CAS_ECM_FF & !CAS_Track &
    !CAS_Track_FF & !CAS_Track_ECM == TRUE
then
    CAS_Track_ECM_FF = TRUE
else
    CAS_Track_ECM_FF = FALSE;

if [f] & !All_CAS_and_STIR & !All_CAS_Modes & !All_CAS_FA &
    !All_CAS_ECM & !All_CAS_ECM_FA & !CAS_Track &
    !CAS_Track_FA & !CAS_Track_ECM == TRUE
then
    CAS_Track_ECM_FA = TRUE
else
    CAS_Track_ECM_FA = FALSE;

-------------------------------------------

CAS SEARCH VALUES

if [g]&[h]&[i]&[j]&[k]&[l] & !All_CAS_and_STIR &
    !All_CAS_Modes == TRUE
then
    CAS_Search = TRUE
else
    CAS_Search = FALSE;
if [g]&[h]&[i] & !All_CAS_and_STIR & !All_CAS_Modes &
    !All_CAS_FF &    !CAS_Search == TRUE
then
    CAS_Search_FF = TRUE
else
    CAS_Search_FF = FALSE;
if [j]&[k]&[l] & !All_CAS_and_STIR & !All_CAS_Modes &
    !All_CAS_FA & !CAS_Search == TRUE
then
    CAS_Search_FA = TRUE
else
```

```
    CAS_Search_FA = FALSE;

if [g]&[h]&[j]&[k] & !All_CAS_and_STIR & !All_CAS_Modes &
    !All_CAS_Non_ECM & !CAS_Search == TRUE
then
    CAS_Search_Target_and_Clutter = TRUE
else
    CAS_Search_Target_and_Clutter = FALSE;
if [g]&[h] & !All_CAS_and_STIR & !All_CAS_Modes &
    !All_CAS_FF & !All_CAS_Non_ECM & !All_CAS_Non_ECM_FF &
    !CAS_Search & !CAS_Search_FF &
    !CAS_Search_Target_and_Clutter == TRUE
then
    CAS_Search_Target_and_Clutter_FF = TRUE
else
    CAS_Search_Target_and_Clutter_FF = FALSE;
if [j]&[k] & !All_CAS_and_STIR & !All_CAS_Modes &
    !All_CAS_FA & !All_CAS_Non_ECM & !All_CAS_Non_ECM_FA &
    !CAS_Search & !CAS_Search_FA &
    !CAS_Search_Target_and_Clutter == TRUE
then
    CAS_Search_Target_and_Clutter_FA = TRUE
else
    CAS_Search_Target_and_Clutter_FA = FALSE;
if [g]&[j] &  !All_CAS_and_STIR & !All_CAS_Modes &
    !CAS_Search & !All_CAS_Non_ECM &
    !CAS_Search_Target_and_Clutter== TRUE
then
    CAS_Search_Target = TRUE
else
    CAS_Search_Target = FALSE;
if [g] & !All_CAS_and_STIR & !All_CAS_Modes &  !All_CAS_FF &
    !CAS_Search & !CAS_Search_FF & !All_CAS_Non_ECM &
    !All_CAS_Non_ECM_FF & !CAS_Search_Target_and_Clutter &
    !CAS_Search_Target_and_Clutter_FF == TRUE
then
    CAS_Search_Target_FF = TRUE
else
    CAS_Search_Target_FF = FALSE;
if [j] & !All_CAS_and_STIR & !All_CAS_Modes &  !All_CAS_FA &
    !CAS_Search & !CAS_Search_FA & !All_CAS_Non_ECM &
    !All_CAS_Non_ECM_FA & !CAS_Search_Target_and_Clutter &
    !CAS_Search_Target_and_Clutter_FA == TRUE
then
    CAS_Search_Target_FA = TRUE
else
    CAS_Search_Target_FA = FALSE;
if [h]&[k] & !All_CAS_and_STIR & !All_CAS_Modes &
    !All_CAS_Non_ECM & !CAS_Search &
    !CAS_Search_Target_and_Clutter== TRUE
then
    CAS_Search_Clutter = TRUE
```

```
else
    CAS_Search_Clutter = FALSE;

if [h] & !All_CAS_and_STIR & !All_CAS_Modes & !All_CAS_FF &
    !All_CAS_Non_ECM & !All_CAS_Non_ECM_FF & !CAS_Search &
    !CAS_Search_FF & !CAS_Search_Target_and_Clutter &
    !CAS_Search_Target_and_Clutter_FF == TRUE
then
    CAS_Search_Clutter_FF = TRUE
else
    CAS_Search_Clutter_FF = FALSE;

if [k] & !All_CAS_and_STIR & !All_CAS_Modes & !All_CAS_FA &
    !All_CAS_Non_ECM & !All_CAS_Non_ECM_FA & !CAS_Search &
    !CAS_Search_FA & !CAS_Search_Target_and_Clutter &
    !CAS_Search_Target_and_Clutter_FA == TRUE
then
    CAS_Search_Clutter_FA = TRUE
else
    CAS_Search_Clutter_FA = FALSE;
if [i]&[l] & !All_CAS_and_STIR & !All_CAS_Modes &
    !All_CAS_ECM & !CAS_Search== TRUE
then
    CAS_Search_ECM = TRUE
else
    CAS_Search_ECM = FALSE;

if [i] & !All_CAS_and_STIR & !All_CAS_Modes & !All_CAS_FF &
    !All_CAS_ECM & !All_CAS_ECM_FF & !CAS_Search &
    !CAS_Search_FF & !CAS_Search_ECM == TRUE
then
    CAS_Search_ECM_FF = TRUE
else
    CAS_Search_ECM_FF = FALSE;
if [l] & !All_CAS_and_STIR & !All_CAS_Modes & !All_CAS_FA &
    !All_CAS_ECM & !All_CAS_ECM_FA & !CAS_Search &
    !CAS_Search_FA & !CAS_Search_ECM == TRUE
then
    CAS_Search_ECM_FA = TRUE
else
    CAS_Search_ECM_FA = FALSE;

-------------------------------------------
```

STIR VALUES

```
if [STIR AFC] == TRUE
then
    STIR_AFC = TRUE
else
    STIR_AFC = FALSE;
```

```
if [a1]&[b1]&[c1]&[d1]&[e1]&[f1] & !All_CAS_and_STIR == TRUE
then
    All_STIR_Modes = TRUE
else
    All_STIR_Modes = FALSE;

if [a1]&[b1]&[c1] &  !All_CAS_and_STIR & !All_STIR_Modes ==
    TRUE
then
    All_STIR_FF = TRUE
else
    All_STIR_FF = FALSE;

if [d1]&[e1]&[f1] &  !All_CAS_and_STIR & !All_STIR_Modes ==
    TRUE
then
    All_STIR_FA = TRUE
else
    All_STIR_FA = FALSE;
if [a1]&[b1]&[d1]&[e1] &  !All_CAS_and_STIR &
    !All_STIR_Modes == TRUE
then
    STIR_Track_Target_and_Clutter = TRUE
else
    STIR_Track_Target_and_Clutter = FALSE;
if [a1]&[b1] &  !All_CAS_and_STIR & !All_STIR_Modes &
    !All_STIR_FF & !STIR_Track_Target_and_Clutter == TRUE
then
    STIR_Track_Target_and_Clutter_FF = TRUE
else
    STIR_Track_Target_and_Clutter_FF = FALSE;
if [d1]&[e1] &  !All_CAS_and_STIR & !All_STIR_Modes &
    !All_STIR_FA & !STIR_Track_Target_and_Clutter == TRUE
then
    STIR_Track_Target_and_Clutter_FA = TRUE
else
    STIR_Track_Target_and_Clutter_FA = FALSE;
if [a1]&[d1] &  !All_CAS_and_STIR & !All_STIR_Modes &
    !STIR_Track_Target_and_Clutter == TRUE
then
    STIR_Track_Target = TRUE
else
    STIR_Track_Target = FALSE;
if [a1] &  !All_CAS_and_STIR & !All_STIR_Modes &
    !All_STIR_FF & !STIR_Track_Target_and_Clutter &
    !STIR_Track_Target_and_Clutter_FF == TRUE
then
    STIR_Track_Target_FF = TRUE
else
    STIR_Track_Target_FF = FALSE;
if [d1] &  !All_CAS_and_STIR & !All_STIR_Modes &
    !All_STIR_FA & !STIR_Track_Target_and_Clutter &
```

```
    !STIR_Track_Target_and_Clutter_FA == TRUE
then
    STIR_Track_Target_FA = TRUE
else
    STIR_Track_Target_FA = FALSE;
if [b1]&[e1] &  !All_CAS_and_STIR & !All_STIR_Modes &
    !STIR_Track_Target_and_Clutter== TRUE
then
    STIR_Track_Clutter = TRUE
else
    STIR_Track_Clutter = FALSE;
if [b1] &  !All_CAS_and_STIR & !All_STIR_Modes &
    !All_STIR_FF & !STIR_Track_Target_and_Clutter &
    !STIR_Track_Target_and_Clutter_FF == TRUE
then
    STIR_Track_Clutter_FF = TRUE
else
    STIR_Track_Clutter_FF = FALSE;
if [e1] &  !All_CAS_and_STIR & !All_STIR_Modes &
    !All_STIR_FA & !STIR_Track_Target_and_Clutter &
    !STIR_Track_Target_and_Clutter_FA == TRUE
then
    STIR_Track_Clutter_FA = TRUE
else
    STIR_Track_Clutter_FA = FALSE;
if [c1]&[f1]  &  !All_CAS_and_STIR & !All_STIR_Modes == TRUE
then
    STIR_Track_ECM = TRUE
else
    STIR_Track_ECM = FALSE;
if [c1] & !All_CAS_and_STIR & !All_STIR_Modes & !All_STIR_FF
    & !STIR_Track_ECM == TRUE
then
    STIR_Track_ECM_FF = TRUE
else
    STIR_Track_ECM_FF = FALSE;
if [f1] & !All_CAS_and_STIR & !All_STIR_Modes  &
    !All_STIR_FA & !STIR_Track_ECM== TRUE
then
    STIR_Track_ECM_FA = TRUE
else
    STIR_Track_ECM_FA = FALSE;
```

NO MATCH EVALUATION

```
if CAS_AFC | All_CAS_Modes | All_CAS_FF | All_CAS_FA |
    All_CAS_ECM | All_CAS_ECM_FF | All_CAS_ECM_FA |
    All_CAS_Non_ECM | All_CAS_Non_ECM_FF |
    All_CAS_Non_ECM_FA | CAS_Track | CAS_Track_FF |
    CAS_Track_FA | CAS_Track_Target_and_Clutter|
```

```
    CAS_Track_Target_and_Clutter_FF |
    CAS_Track_Target_and_Clutter_FA | CAS_Track_Target |
    CAS_Track_Target_FF | CAS_Track_Target_FA |
    CAS_Track_Clutter | CAS_Track_Clutter_FF |
    CAS_Track_Clutter_FA | CAS_Track_ECM | CAS_Track_ECM_FF
    | CAS_Track_ECM_FA | CAS_Search| CAS_Search_FF |
    CAS_Search_FA | CAS_Search_Target_and_Clutter |
    CAS_Search_Target_and_Clutter_FF |
    CAS_Search_Target_and_Clutter_FA | CAS_Search_Target |
    CAS_Search_Target_FF | CAS_Search_Target_FA |
    CAS_Search_Clutter | CAS_Search_Clutter_FF |
    CAS_Search_Clutter_FA |
    CAS_Search_ECM | CAS_Search_ECM_FF | CAS_Search_ECM_FA |

    STIR_AFC | All_STIR_Modes | All_STIR_FF | All_STIR_FA |
    STIR_Track_Target_and_Clutter |
    STIR_Track_Target_and_Clutter_FF |
    STIR_Track_Target_and_Clutter_FA | STIR_Track_Target |
    STIR_Track_Target_FF | STIR_Track_Target_FA |
    STIR_Track_Clutter | STIR_Track_Clutter_FF |
    STIR_Track_Clutter_FA | STIR_Track_ECM |
    STIR_Track_ECM_FF | STIR_Track_ECM_FA |

    All_CAS_and_STIR == TRUE
then
    No_Match = FALSE
else
    No_Match = TRUE;

-----------------------------------------
```

PATHS 1 - 19

```
if All_CAS_and_STIR==TRUE
then
    {Path1="All CAS and STIR Modes";
    Path1=Append(Path1,AnsiToChar(13))}
else
    Path1="";
if CAS_AFC==TRUE
then
    {Path2="CAS AFC Failure";
    Path2=Append(Path2,AnsiToChar(13))}
else
    Path2="";
if All_CAS_Modes==TRUE
then
    {Path3="All CAS Modes";
    Path3=Append(Path3,AnsiToChar(13))}
else
    Path3="";
```

```
if All_CAS_FF==TRUE
then
    {Path4="CAS Fixed Frequency Modes";
    Path4=Append(Path4,AnsiToChar(13))}
else
    Path4="";
if All_CAS_Non_ECM|All_CAS_Non_ECM_FF==TRUE
then
    {Path5="All CAS Non ECM Modes";
    Path5=Append(Path5,AnsiToChar(13))}
else
    Path5="";
if CAS_Search==TRUE
then
    {Path6="All CAS Search Modes";
    Path6=Append(Path6,AnsiToChar(13))}
else
    Path6="";
if CAS_Search_FF==TRUE
then
    {Path7="All CAS Search FF or FA Modes (FF)";
    Path7=Append(Path7,AnsiToChar(13))}
else
    Path7="";
if CAS_Search_Target_and_Clutter |
    CAS_Search_Target_and_Clutter_FF == TRUE
then
    {Path8="CAS Search Target and Clutter Modes";
    Path8=Append(Path8,AnsiToChar(13))}
else
    Path8="";
if CAS_Search_Target|CAS_Search_Target_FF==TRUE
then
    {Path9="CAS Search Target Modes";
    Path9=Append(Path9,AnsiToChar(13))}
else
    Path9="";
if CAS_Search_Clutter|CAS_Search_Clutter_FF==TRUE
then
    {Path10="CAS Search Clutter Modes";
    Path10=Append(Path10,AnsiToChar(13))}
else
    Path10="";
if CAS_Track==TRUE
then
    {Path11="All CAS Track Modes";
    Path11=Append(Path11,AnsiToChar(13))}
else
    Path11="";
if CAS_Track_FF==TRUE
then
    {Path12="All CAS Track FF or FA Modes (FF)";
```

```
    Path12=Append(Path12,AnsiToChar(13))}
else
    Path12="";
if CAS_Track_Target_and_Clutter |
    CAS_Track_Target_and_Clutter_FF==TRUE
then
    {Path13="CAS Track Target and Clutter Modes";
    Path13=Append(Path13,AnsiToChar(13))}
else
    Path13="";
if CAS_Track_Target|CAS_Track_Target_FF==TRUE
then
    {Path14= "CAS Track Target Modes";
    Path14=Append(Path14,AnsiToChar(13))}
else
    Path14="";
if CAS_Track_Clutter|CAS_Track_Clutter_FF==TRUE
then
    {Path15="CAS Track Clutter Modes";
    Path15=Append(Path15,AnsiToChar(13))}
else
    Path15="";
if STIR_AFC==TRUE
then
    {Path16="STIR AFC Failure";
    Path16=Append(Path16,AnsiToChar(13))}
else
    Path16="";
if All_STIR_Modes==TRUE
then
    {Path17="All STIR Modes";
    Path17=Append(Path17,AnsiToChar(13))}
else
    Path17="";
if All_STIR_FF==TRUE
then
    {Path18="STIR Fixed Frequency Modes";
    Path18=Append(Path18,AnsiToChar(13))}
else
    Path18="";
if STIR_Track_Target_and_Clutter |
    STIR_Track_Target_and_Clutter_FF==TRUE
then
    {Path19="STIR Track Target and Clutter Modes";
    Path19=Append(Path19,AnsiToChar(13))}
else
    Path19="";

-----------------------------------------
```

PATHS 20 - 39

```
if STIR_Track_Target|STIR_Track_Target_FF==TRUE
then
    {Path20="STIR Track Target Modes";
    Path20=Append(Path20,AnsiToChar(13))}
else
    Path20="";
if STIR_Track_Clutter|STIR_Track_Clutter_FF==TRUE
then
    {Path21="STIR Track Clutter Modes";
    Path21=Append(Path21,AnsiToChar(13))}
else
    Path21="";
if All_CAS_Non_ECM_FA==TRUE
then
    {Path22="All_CAS_Non_ECM Modes (FA)";
    Path22=Append(Path22,AnsiToChar(13))}
else
    Path22="";
if All_CAS_FA==TRUE
then
    {Path23="CAS Frequency Agile Modes";
    Path23=Append(Path23,AnsiToChar(13))}
else
    Path23="";
if CAS_Search_FA==TRUE
then
    {Path24="CAS Search FF or FA Modes (FA)";
    Path24=Append(Path24,AnsiToChar(13))}
else
    Path24="";
if  CAS_Search_Target_and_Clutter_FA==TRUE
then
    {Path25="CAS Search Target and Clutter Modes";
    Path25=Append(Path25,AnsiToChar(13))}
else
    Path25="";
if CAS_Search_Target_FA==TRUE
then
    {Path26="CAS Search Target Modes";
    Path26=Append(Path26,AnsiToChar(13))}
else
    Path26="";
if CAS_Search_Clutter_FA==TRUE
then
    {Path27="CAS Search Clutter Modes";
    Path27=Append(Path27,AnsiToChar(13))}
else
    Path27="";
if CAS_Track_FA==TRUE
then
```

```
    {Path28="CAS Track FF or FA Modes (FA)";
    Path28=Append(Path28,AnsiToChar(13))}
else
    Path28="";
if CAS_Track_Target_and_Clutter_FA==TRUE
then
    {Path29="CAS Track Target and Clutter Modes";
    Path29=Append(Path29,AnsiToChar(13))}
else
    Path29="";
if CAS_Track_Target_FA==TRUE
then
    {Path30="CAS Track Target Modes";
    Path30=Append(Path30,AnsiToChar(13))}
else
    Path30="";
if CAS_Track_Clutter_FA==TRUE
then
    {Path31="CAS Track Clutter Modes";
    Path31=Append(Path31,AnsiToChar(13))}
else
    Path31="";
if All_STIR_FA==TRUE
then
    {Path32="STIR Frequency Agile Modes";
    Path32=Append(Path32,AnsiToChar(13))}
else
    Path32="";
if STIR_Track_Target_and_Clutter_FA==TRUE
then
    {Path33="STIR Track Target and Clutter Modes";
    Path33=Append(Path33,AnsiToChar(13))}
else
    Path33="";
if STIR_Track_Target_FA==TRUE
then
    {Path34="STIR Track Target Modes";
    Path34=Append(Path34,AnsiToChar(13))}
else
    Path34="";
if STIR_Track_Clutter_FA==TRUE
then
    {Path35="STIR Track Clutter Modes";
    Path35=Append(Path35,AnsiToChar(13))}
else
    Path35="";
if All_CAS_ECM|All_CAS_ECM_FF|All_CAS_ECM_FA==TRUE
then
    {Path36="All CAS ECM Modes";
    Path36=Append(Path36,AnsiToChar(13))}
else
    Path36="";
```

THIS PAGE INTENTIONALLY LEFT BLANK

```
if CAS_Search_ECM|CAS_Search_ECM_FF|CAS_Search_ECM_FA==TRUE
then
    {Path37="CAS Search ECM Modes";
    Path37=Append(Path37,AnsiToChar(13))}
else
    Path37="";
if CAS_Track_ECM|CAS_Track_ECM_FF|CAS_Track_ECM_FA==TRUE
then
    {Path38="CAS Track ECM Modes";
    Path38=Append(Path38,AnsiToChar(13))}
else
    Path38="";
if STIR_Track_ECM|STIR_Track_ECM_FF|STIR_Track_ECM_FA==TRUE
then
    {Path39="STIR Track ECM Modes";
    Path39=Append(Path39,AnsiToChar(13))}
else
    Path39="";
```

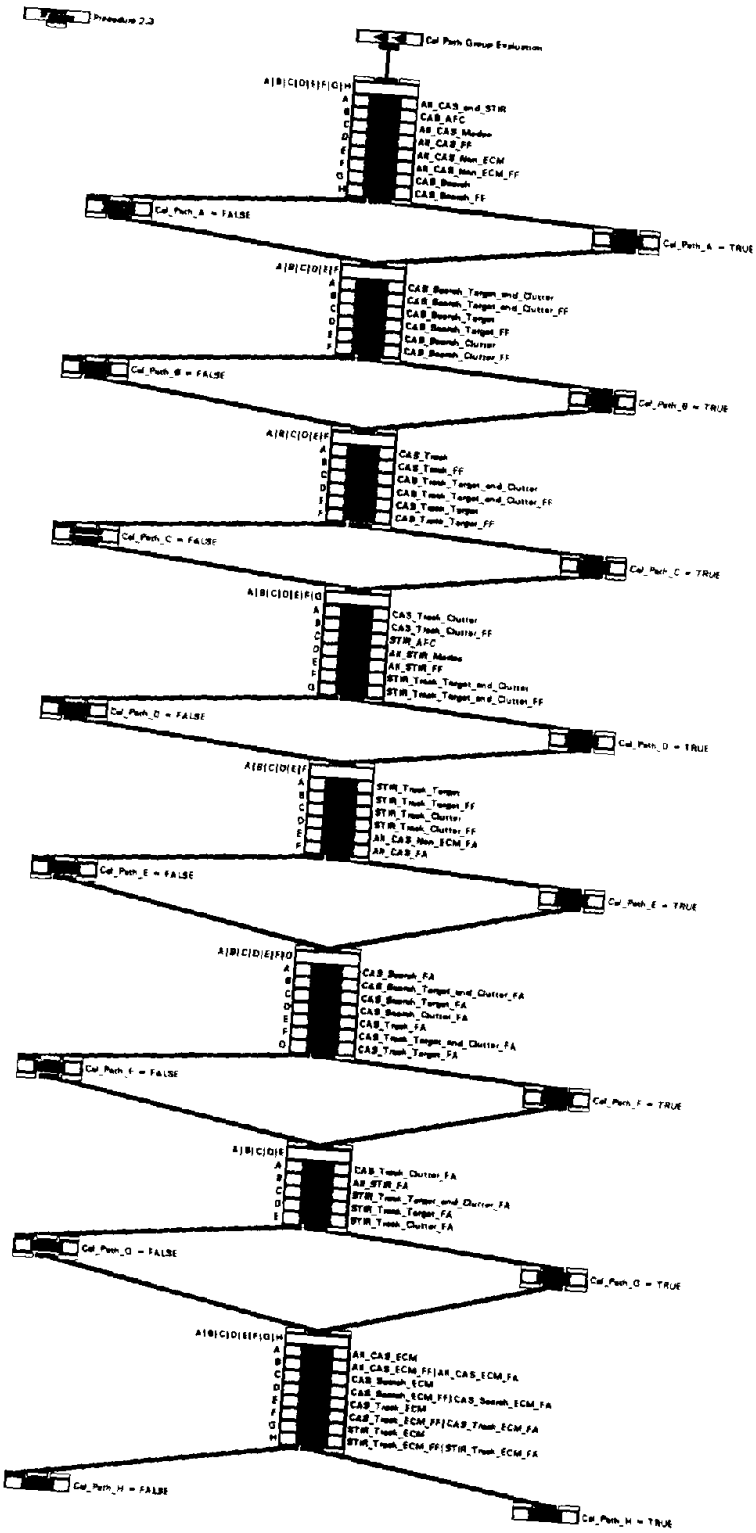
Procedure 2.3
Cal Path Group Evaluation
A|B|C|D|E|F|G|H
AR_CAS_and_STIR
CAB_AFC
AR_CAB_Modes
AR_CAB_FF
AR_CAB_Non_ECM
AR_CAB_Non_ECM_FF
CAB_Search
CAB_Search_FF
Cal_Path_A = FALSE
Cal_Path_A = TRUE
A|B|C|D|E|F
CAB_Search_Target_and_Clutter
CAB_Search_Target_and_Clutter_FF
CAB_Search_Target
CAB_Search_Target_FF
CAB_Search_Clutter
CAB_Search_Clutter_FF
Cal_Path_B = FALSE
Cal_Path_B = TRUE
A|B|C|D|E|F
CAB_Track
CAB_Track_FF
CAB_Track_Target_and_Clutter
CAB_Track_Target_and_Clutter_FF
CAB_Track_Target
CAB_Track_Target_FF
Cal_Path_C = FALSE
Cal_Path_C = TRUE
A|B|C|D|E|F|G
CAB_Track_Clutter
CAB_Track_Clutter_FF
STIR_AFC
AR_STIR_Modes
AR_STIR_FF
STIR_Track_Target_and_Clutter
STIR_Track_Target_and_Clutter_FF
Cal_Path_D = FALSE
Cal_Path_D = TRUE
A|B|C|D|E|F
STIR_Track_Target
STIR_Track_Target_FF
STIR_Track_Clutter
STIR_Track_Clutter_FF
AR_CAB_Non_ECM_FA
AR_CAB_FA
Cal_Path_E = FALSE
Cal_Path_E = TRUE
A|B|C|D|E|F|G
CAB_Search_FA
CAB_Search_Target_and_Clutter_FA
CAB_Search_Target_FA
CAB_Search_Clutter_FA
CAB_Track_FA
CAB_Track_Target_and_Clutter_FA
CAB_Track_Target_FA
Cal_Path_F = FALSE
Cal_Path_F = TRUE
A|B|C|D|E
CAB_Track_Clutter_FA
AR_STIR_FA
STIR_Track_Target_and_Clutter_FA
STIR_Track_Target_FA
STIR_Track_Clutter_FA
Cal_Path_G = FALSE
Cal_Path_G = TRUE
A|B|C|D|E|F|G|H
AR_CAB_ECM
AR_CAB_ECM_FF|AR_CAB_ECM_FA
CAB_Search_ECM
CAB_Search_ECM_FF|CAB_Search_ECM_FA
CAB_Track_ECM
CAB_Track_ECM_FF|CAB_Track_ECM_FA
STIR_Track_ECM
STIR_Track_ECM_FF|STIR_Track_ECM_FA
Cal_Path_H = FALSE
Cal_Path_H = TRUE

Name:	**CAL PATH GROUP EVALUATION**
Number:	2.3
Description:	This procedure determines which path groups need to be invoked to access troubleshooting paths. The prioritized order of conditions present in this procedure reflects the order of criticality described by the knowledge expert.
Called By:	Calibration Menu
Calls:	None
Expert Drawing:	There is no corresponding Expert Drawing page number.

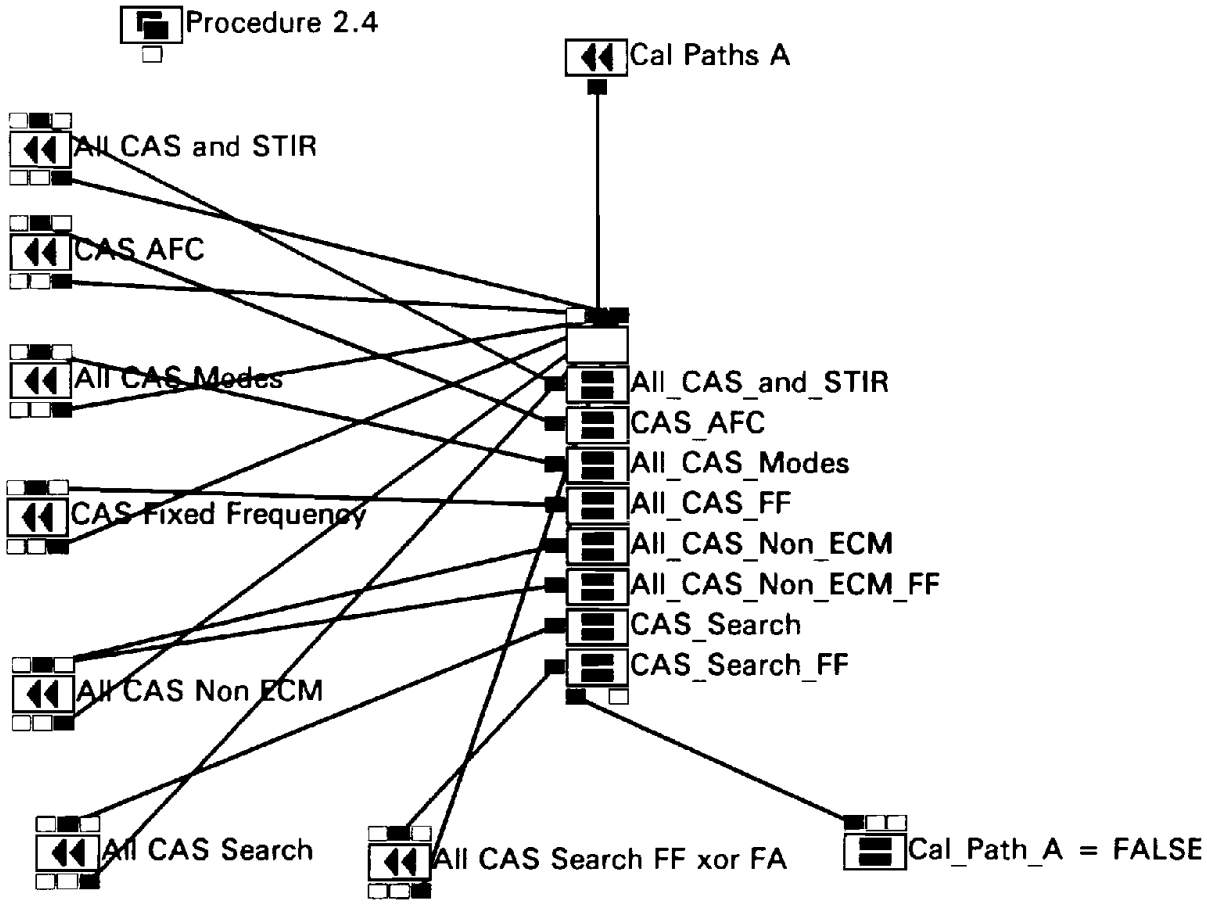
Procedure 2.4
Cal Paths A
All CAS and STIR
CAS AFC
All CAS Modes
CAS Fixed Frequency
All CAS Non ECM
All CAS Search
All CAS Search FF xor FA
All_CAS_and_STIR
CAS_AFC
All_CAS_Modes
All_CAS_FF
All_CAS_Non_ECM
All_CAS_Non_ECM_FF
CAS_Search
CAS_Search_FF
Cal_Path_A = FALSE

Name:	**CAL PATHS A**
Number:	2.4
Description:	This procedure calls whichever paths are defined by TRUE variable values.
Called By:	Calibration Menu
Calls:	All CAS and STIR, CAS AFC, All CAS Modes, CAS Fixed Frequency, All CAS Non ECM, All CAS Search, All CAS Search FF xor FA.
Expert Drawing:	There is no corresponding Expert Drawing page number.

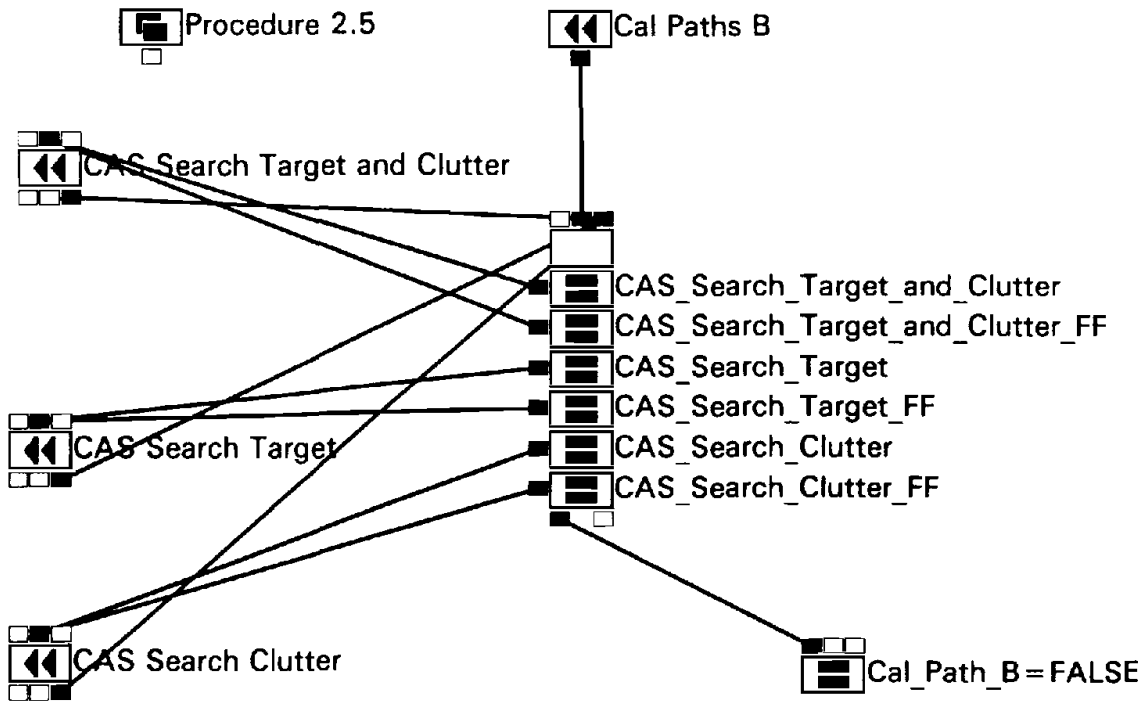
Procedure 2.5
Cal Paths B
CAS Search Target and Clutter
CAS_Search_Target_and_Clutter
CAS_Search_Target_and_Clutter_FF
CAS_Search_Target
CAS_Search_Target_FF
CAS Search Target
CAS_Search_Clutter
CAS_Search_Clutter_FF
CAS Search Clutter
Cal_Path_B = FALSE

Name:	**CAL PATHS B**
Number:	2.5
Description:	This procedure calls whichever paths are defined by TRUE variable values.
Called By:	Calibration Menu
Calls:	CAS Search Target and Clutter, CAS Search Target, CAS Search Clutter.
Expert Drawing:	There is no corresponding Expert Drawing page number.

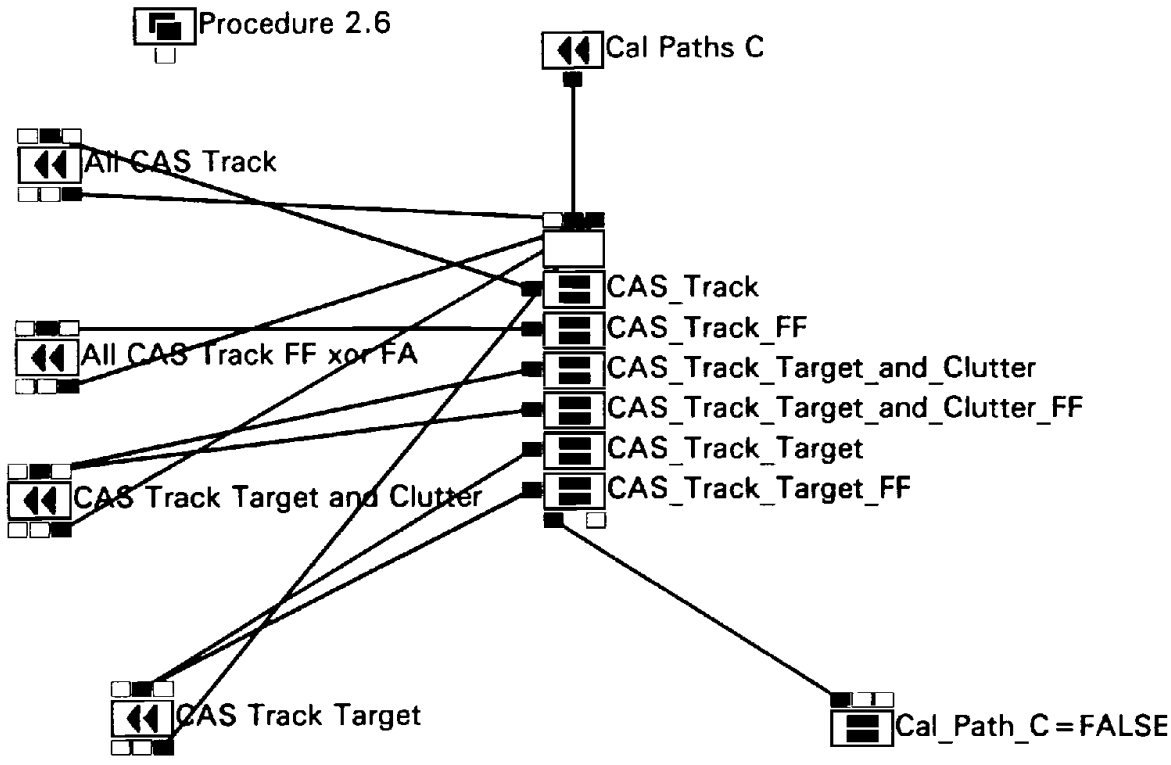
Procedure 2.6
Cal Paths C
All CAS Track
All CAS Track FF xor FA
CAS Track Target and Clutter
CAS Track Target
CAS_Track
CAS_Track_FF
CAS_Track_Target_and_Clutter
CAS_Track_Target_and_Clutter_FF
CAS_Track_Target
CAS_Track_Target_FF
Cal_Path_C = FALSE

Name:	**CAL PATHS C**
Number:	2.6
Description:	This procedure calls whichever paths are defined by TRUE variable values.
Called By:	Calibration Menu
Calls:	All CAS Track, All CAS Track FF xor FA, CAS Track Target and Clutter, CAS Track Target.
Expert Drawing:	There is no corresponding Expert Drawing page number.

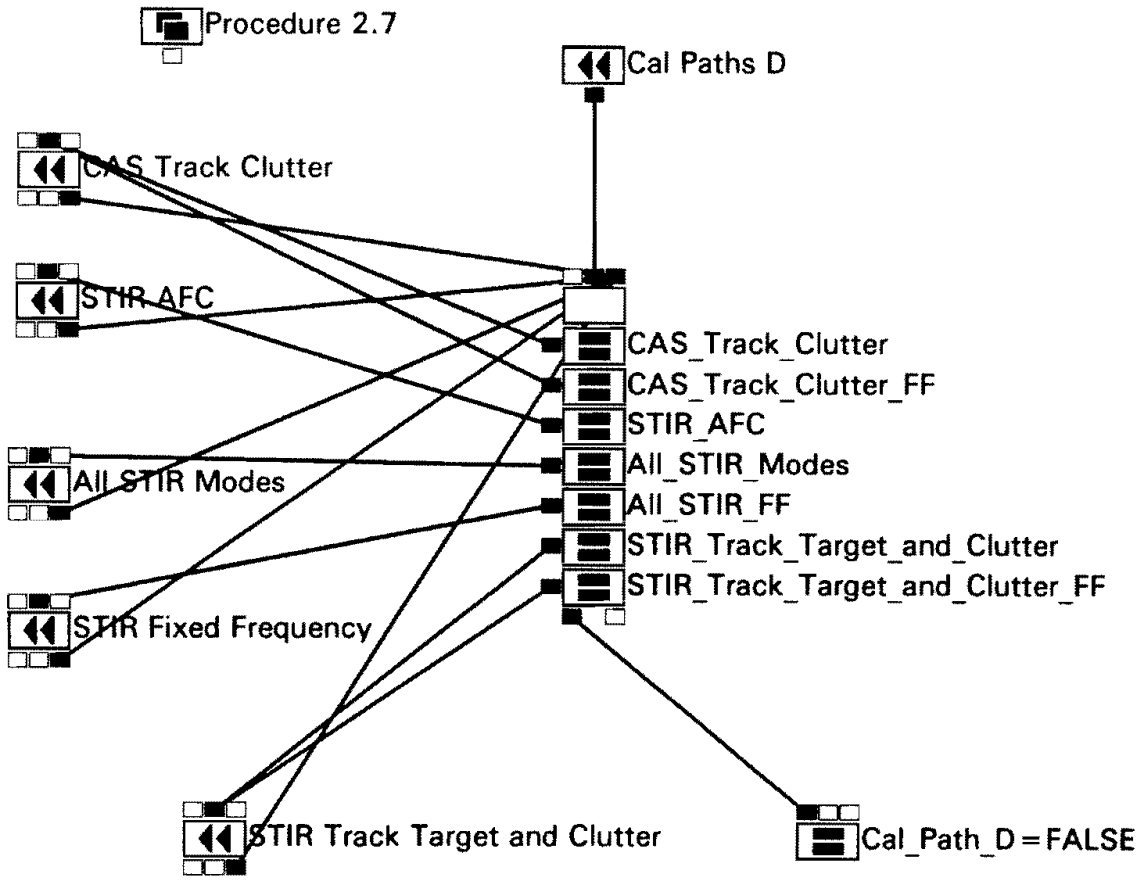
Procedure 2.7
Cal Paths D
CAS Track Clutter
STIR AFC
All STIR Modes
STIR Fixed Frequency
CAS_Track_Clutter
CAS_Track_Clutter_FF
STIR_AFC
All_STIR_Modes
All_STIR_FF
STIR_Track_Target_and_Clutter
STIR_Track_Target_and_Clutter_FF
STIR Track Target and Clutter
Cal_Path_D = FALSE

Name:	**CAL PATHS D**
Number:	2.7
Description:	This procedure calls whichever paths are defined by TRUE variable values.
Called By:	Calibration Menu
Calls:	CAS Track Clutter, STIR AFC, All STIR Modes, STIR Fixed Frequency, STIR Track Target and Clutter.
Expert Drawing:	There is no corresponding Expert Drawing page number.

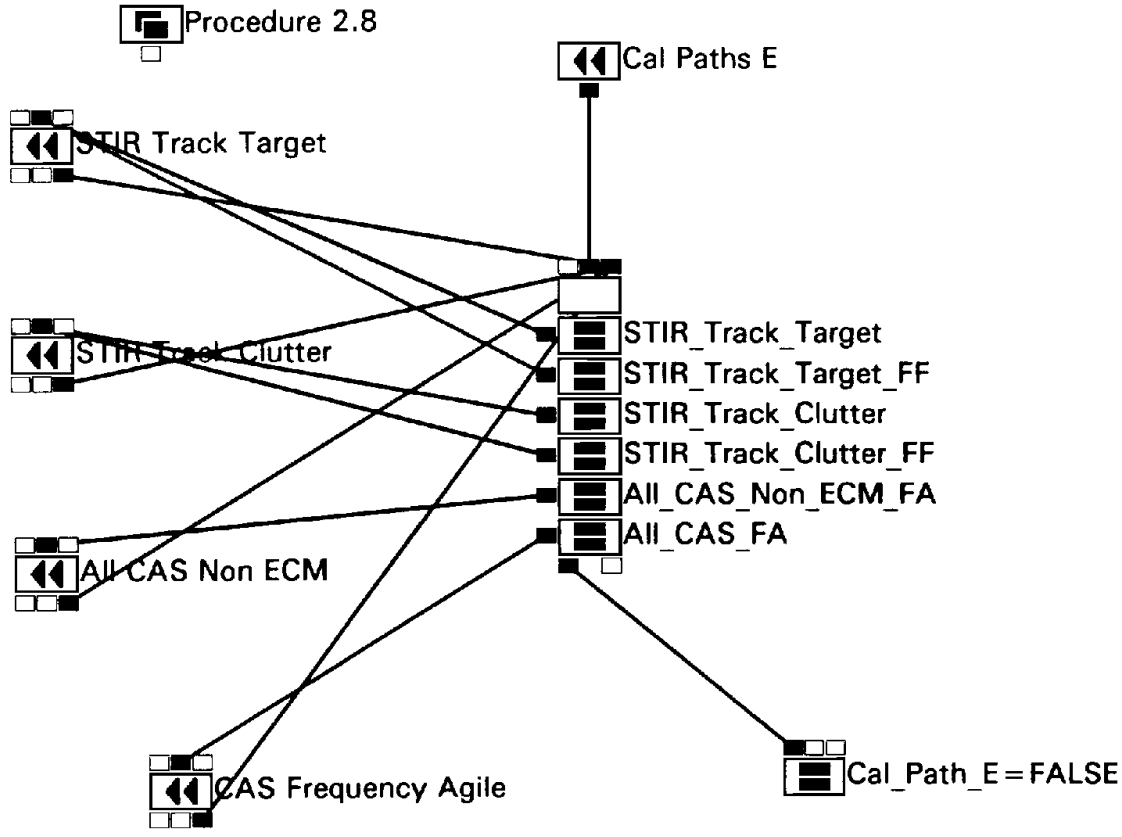
Procedure 2.8
Cal Paths E
STIR Track Target
STIR_Track_Target
STIR_Track_Target_FF
STIR_Track_Clutter
STIR_Track_Clutter_FF
All_CAS_Non_ECM_FA
All_CAS_FA
All CAS Non ECM
CAS Frequency Agile
Cal_Path_E = FALSE

Name:	**CAL PATHS E**
Number:	2.8
Description:	This procedure calls whichever paths are defined by TRUE variable values.
Called By:	Calibration Menu
Calls:	STIR Track Target, STIR Track Clutter, All CAS Non ECM, CAS Frequency Agile.
Expert Drawing:	There is no corresponding Expert Drawing page number.

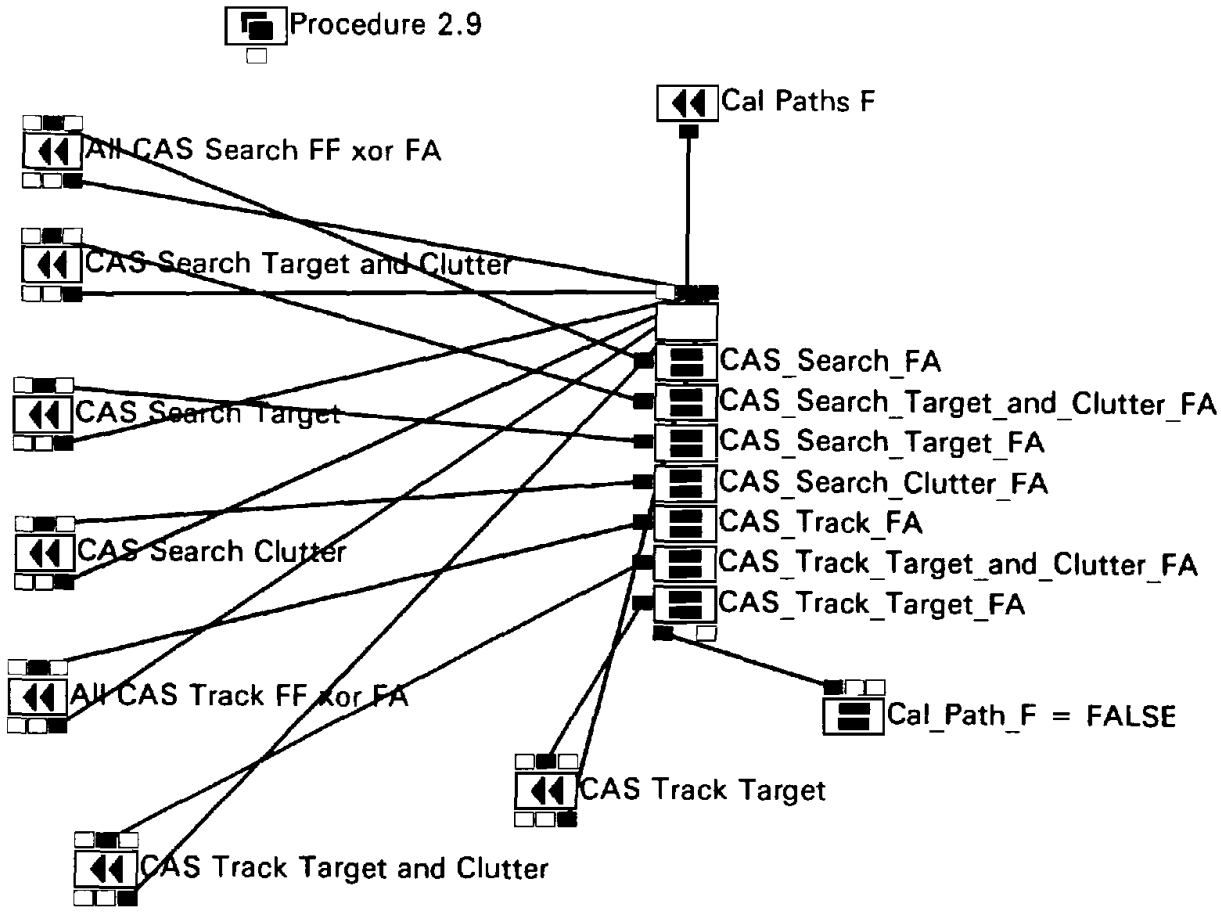
Procedure 2.9
Cal Paths F
All CAS Search FF xor FA
CAS Search Target and Clutter
CAS Search Target
CAS Search Clutter
All CAS Track FF xor FA
CAS Track Target and Clutter
CAS Track Target
CAS_Search_FA
CAS_Search_Target_and_Clutter_FA
CAS_Search_Target_FA
CAS_Search_Clutter_FA
CAS_Track_FA
CAS_Track_Target_and_Clutter_FA
CAS_Track_Target_FA
Cal_Path_F = FALSE

Name:	**CAL PATHS F**
Number:	2.9
Description:	This procedure calls whichever paths are defined by TRUE variable values.
Called By:	Calibration Menu
Calls:	All CAS Search FF xor FA, CAS Search Target and Clutter, CAS Search Target, CAS Search Clutter, All CAS Track FF xor FA, CAS Track Target and Clutter, CAS Track Target.
Expert Drawing:	There is no corresponding Expert Drawing page number.

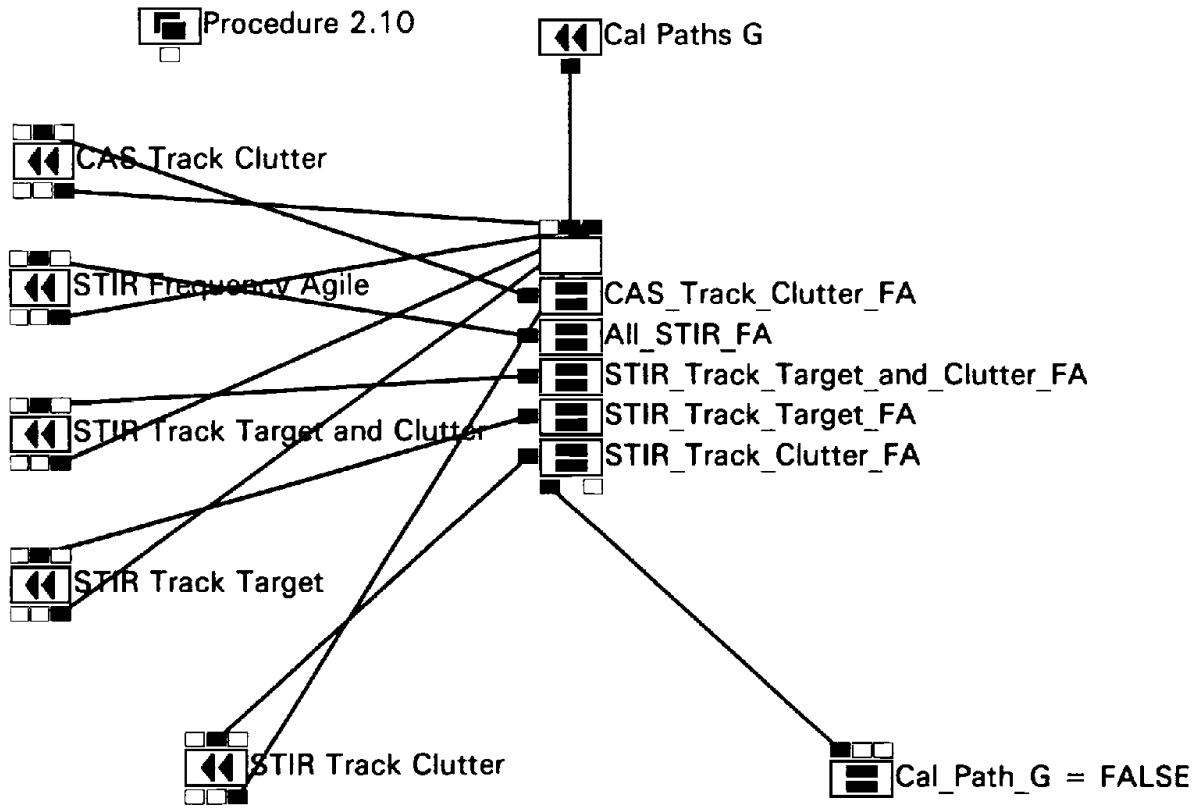
Procedure 2.10
Cal Paths G
CAS Track Clutter
STIR Frequency Agile
STIR Track Target and Clutter
STIR Track Target
STIR Track Clutter
CAS_Track_Clutter_FA
All_STIR_FA
STIR_Track_Target_and_Clutter_FA
STIR_Track_Target_FA
STIR_Track_Clutter_FA
Cal_Path_G = FALSE

Name:	**CAL PATHS G**
Number:	2.10
Description:	This procedure calls whichever paths are defined by TRUE variable values.
Called By:	Calibration Menu
Calls:	CAS Track Clutter, STIR Frequency Agile, STIR Track Target and Clutter, STIR Track Target, STIR Track Clutter.
Expert Drawing:	There is no corresponding Expert Drawing page number.

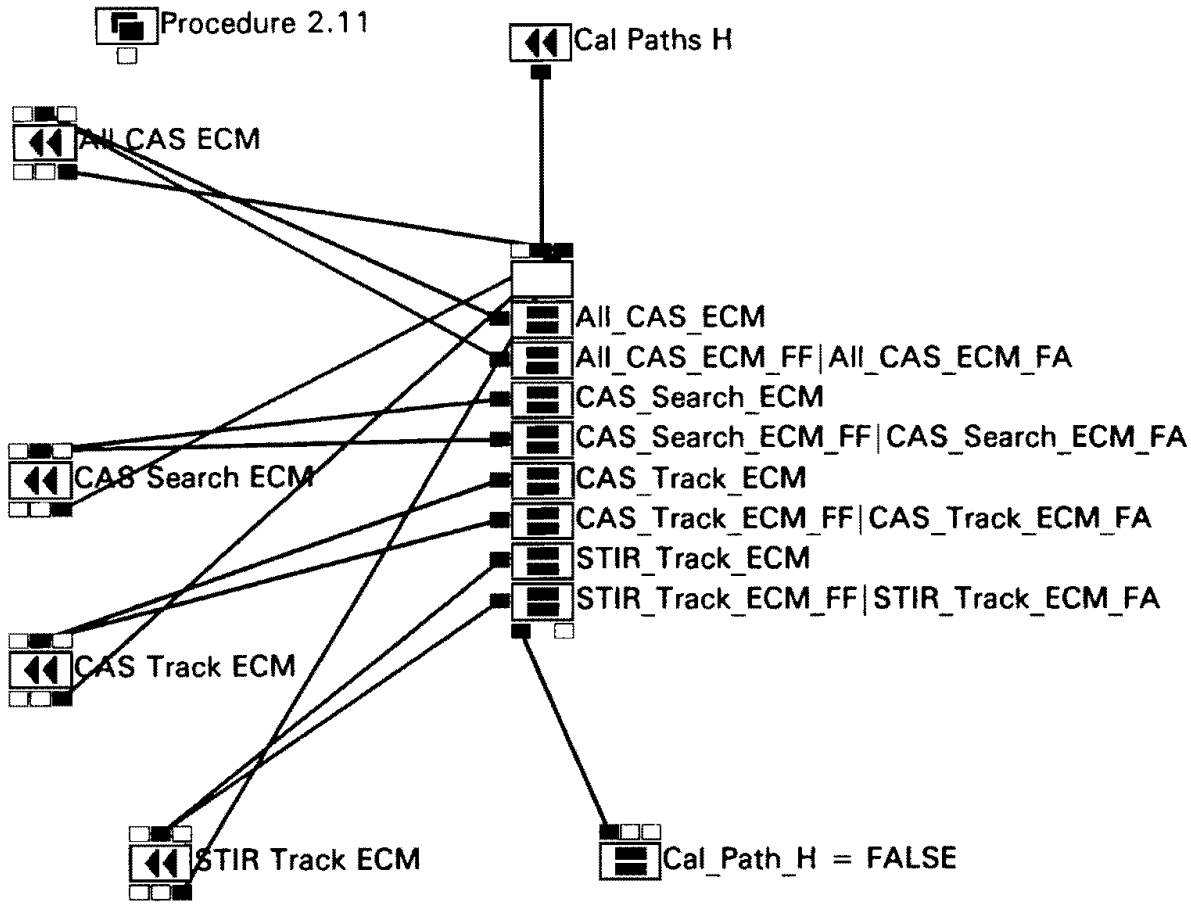
Procedure 2.11
Cal Paths H
All CAS ECM
All_CAS_ECM
All_CAS_ECM_FF|All_CAS_ECM_FA
CAS_Search_ECM
CAS_Search_ECM_FF|CAS_Search_ECM_FA
CAS Search ECM
CAS_Track_ECM
CAS_Track_ECM_FF|CAS_Track_ECM_FA
STIR_Track_ECM
STIR_Track_ECM_FF|STIR_Track_ECM_FA
CAS Track ECM
STIR Track ECM
Cal_Path_H = FALSE

Name:	**CAL PATHS H**
Number:	2.11
Description:	This procedure calls whichever paths are defined by TRUE variable values.
Called By:	Calibration Menu
Calls:	All CAS ECM, CAS Search ECM, CAS Track ECM, STIR Track ECM.
Expert Drawing:	There is no corresponding Expert Drawing page number.

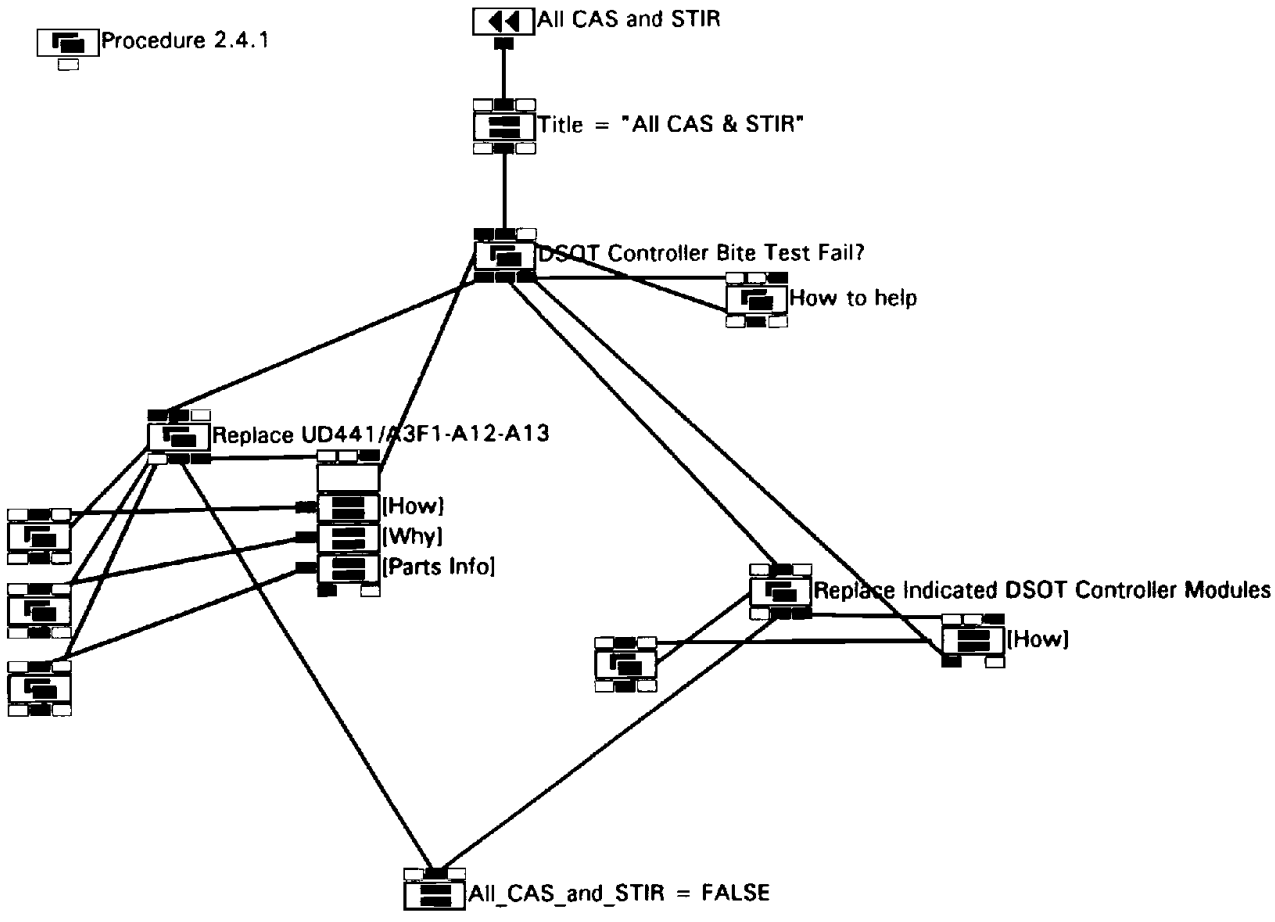
Procedure 2.4.1
All CAS and STIR
Title = "All CAS & STIR"
DSOT Controller Bite Test Fail?
How to help
Replace UD441/A3F1-A12-A13
[How]
[Why]
[Parts Info]
Replace Indicated DSOT Controller Modules
[How]
All_CAS_and_STIR = FALSE

Name:	**ALL CAS AND STIR**
Number:	2.4.1
Description:	This procedure corresponds to the situation where the user checks off all indications (except CAS and STIR AFC) on the Printout Entry Menu or selects it from the Manual Menu list box.
Called By:	Cal Paths A
Calls:	None
Expert Drawing:	This procedure corresponds to Expert Drawing page SH1.

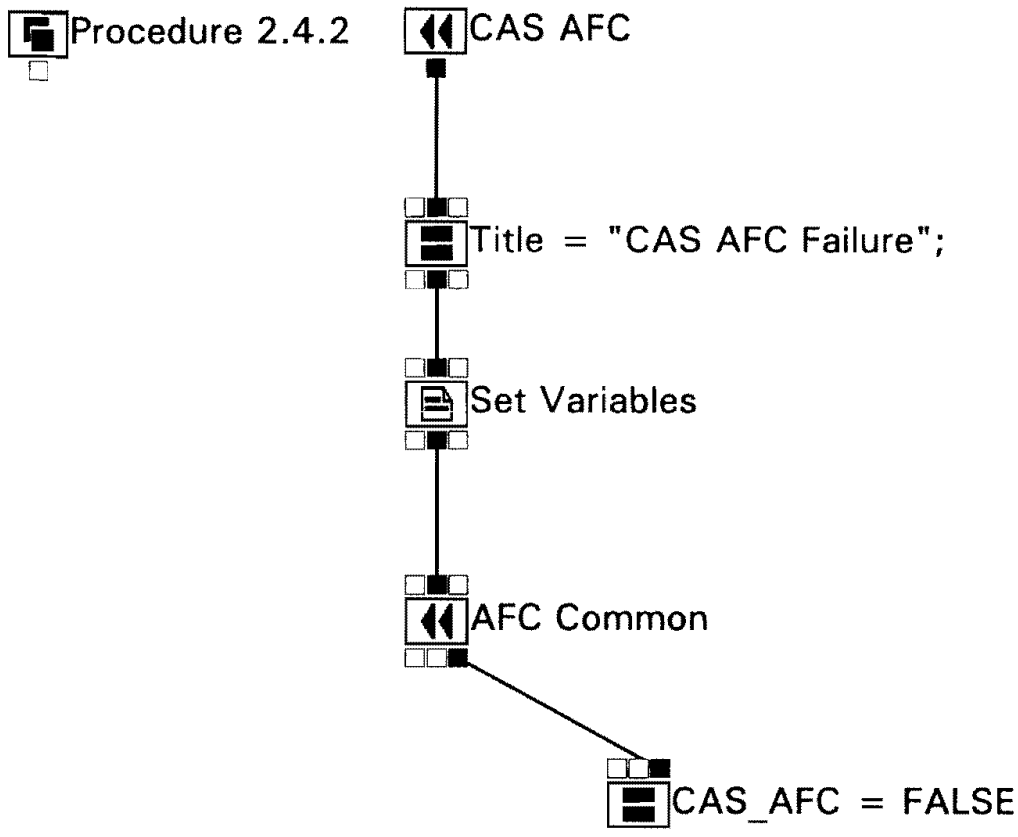
Procedure 2.4.2
CAS AFC
Title = "CAS AFC Failure";
Set Variables
AFC Common
CAS_AFC = FALSE

Name:	**CAS AFC**
Number:	2.4.2
Description:	This procedure is called when the user checks off the CAS AFC box on the Printout Entry Menu or selects it from the Manual Menu list box. It then sets variable values to utilize a common procedure shared with STIR AFC.
Called By:	Cal Paths A
Calls:	AFC Common
Expert Drawing:	There is no corresponding Expert Drawing page number.

CUSTOM NODE SCRIPTS

SET VARIABLES

```
CAS_STIR = "CAS";
Card1 = "412";
Card2 = "461";
Cable1 = "1002-1";
SFO1 = "SFO-14-7, SH2";
Fig1 = "2-91";
Fig2 = "2-116";
Fig3 = "2-91";
Item1 = "102";
Item2 = "161";
Page1 = "2-721";
```

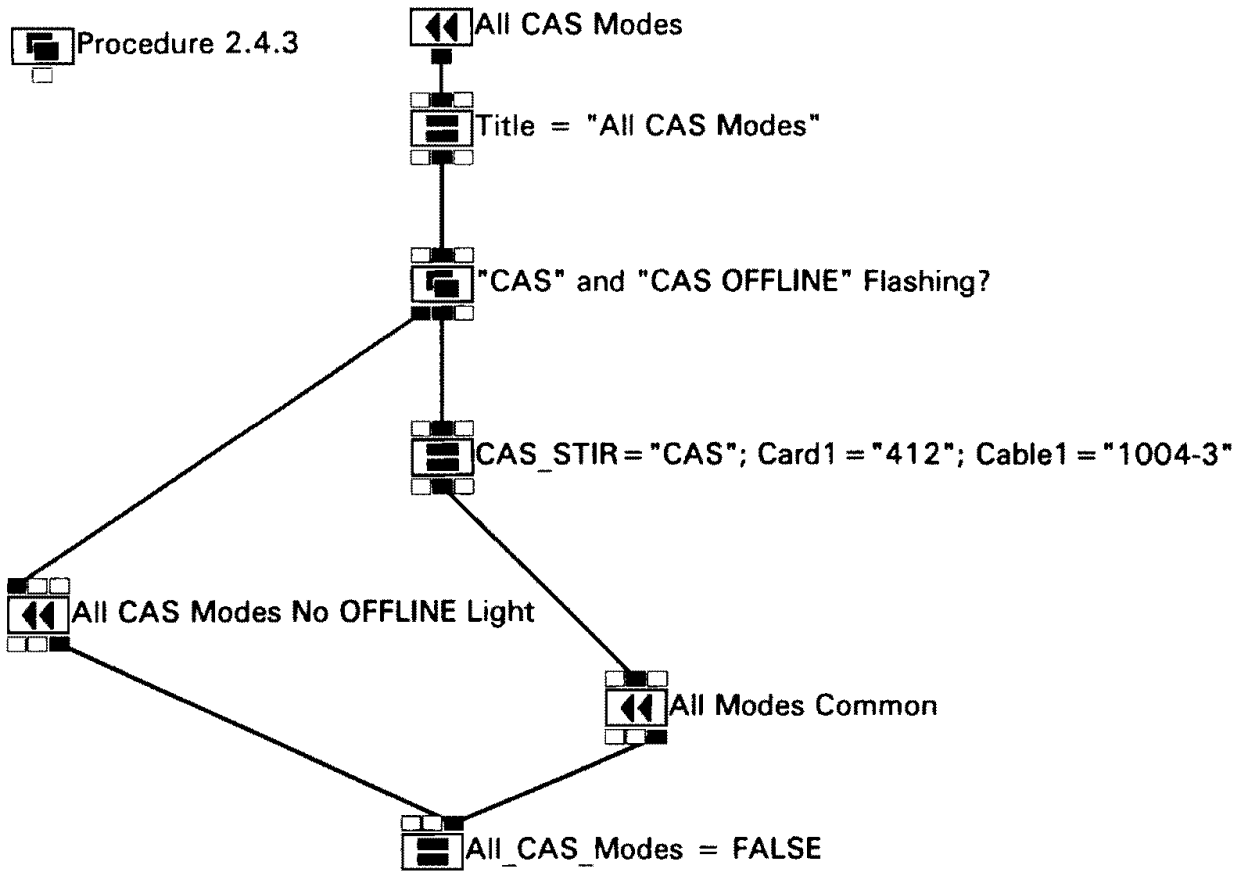
Procedure 2.4.3
All CAS Modes
Title = "All CAS Modes"
"CAS" and "CAS OFFLINE" Flashing?
CAS_STIR = "CAS"; Card1 = "412"; Cable1 = "1004-3"
All CAS Modes No OFFLINE Light
All Modes Common
All_CAS_Modes = FALSE

Name:	**ALL CAS MODES**
Number:	2.4.3
Description:	This procedure is called by Cal Paths A when indications checked off on the Printout Entry Menu match the path selection criteria or the user selects it from the Manual Menu list box. It calls either All CAS Modes No OFFLINE Light, or sets variable values to utilize All Modes Common, which it shares with All STIR Modes.
Called By:	Cal Paths A
Calls:	All Modes Common, All CAS Modes No OFFLINE Light
Expert Drawing:	This procedure corresponds in part to Expert Drawing page SH2B.

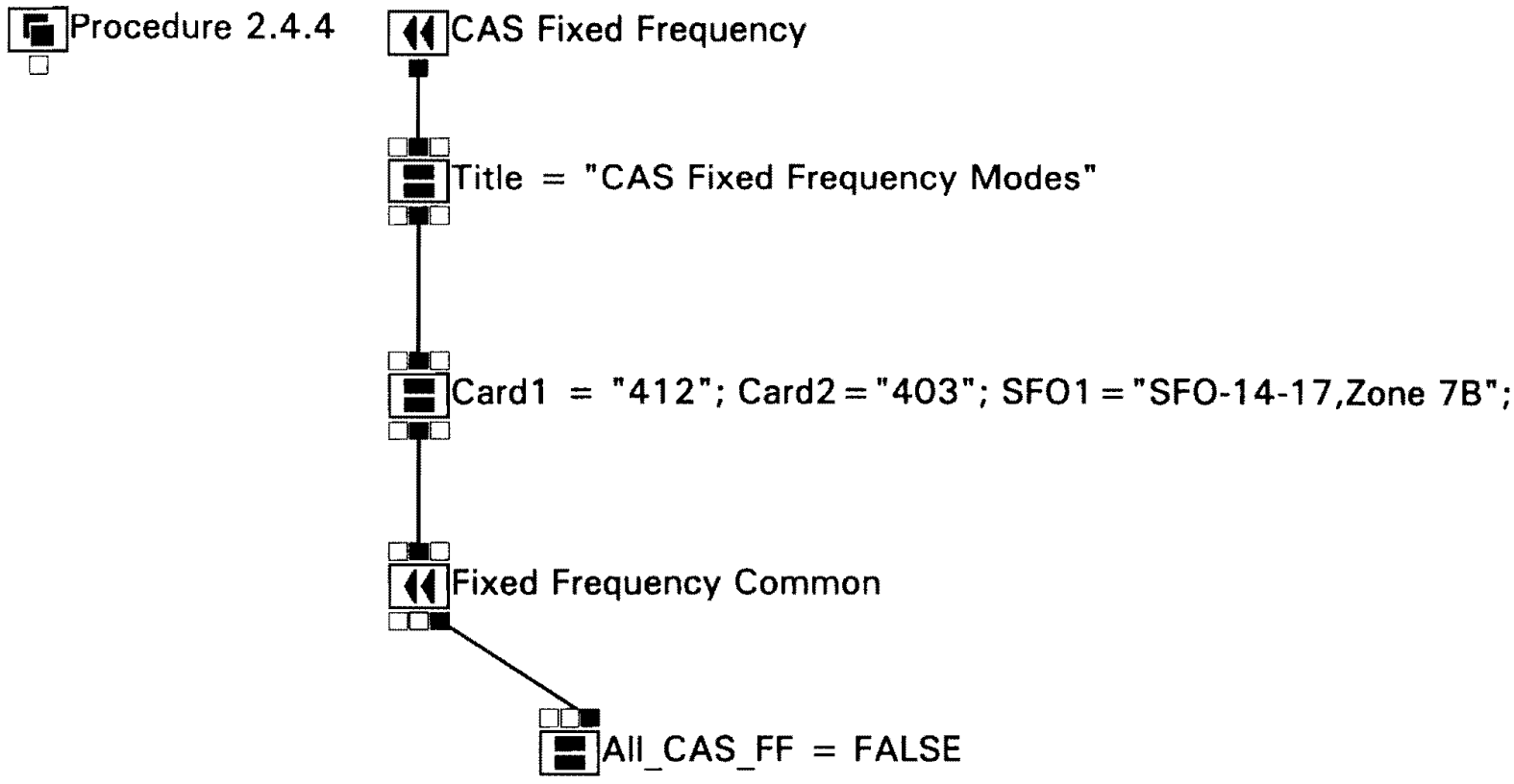
Procedure 2.4.4
CAS Fixed Frequency
Title = "CAS Fixed Frequency Modes"
Card1 = "412"; Card2 = "403"; SFO1 = "SFO-14-17,Zone 7B";
Fixed Frequency Common
All_CAS_FF = FALSE

Name:	**CAS FIXED FREQUENCY**
Number:	2.4.4
Description:	This procedure sets variable values to utilize a common procedure shared with STIR Fixed Frequency.
Called By:	Cal Paths A
Calls:	Fixed Frequency Common
Expert Drawing:	There is no corresponding Expert Drawing page number.

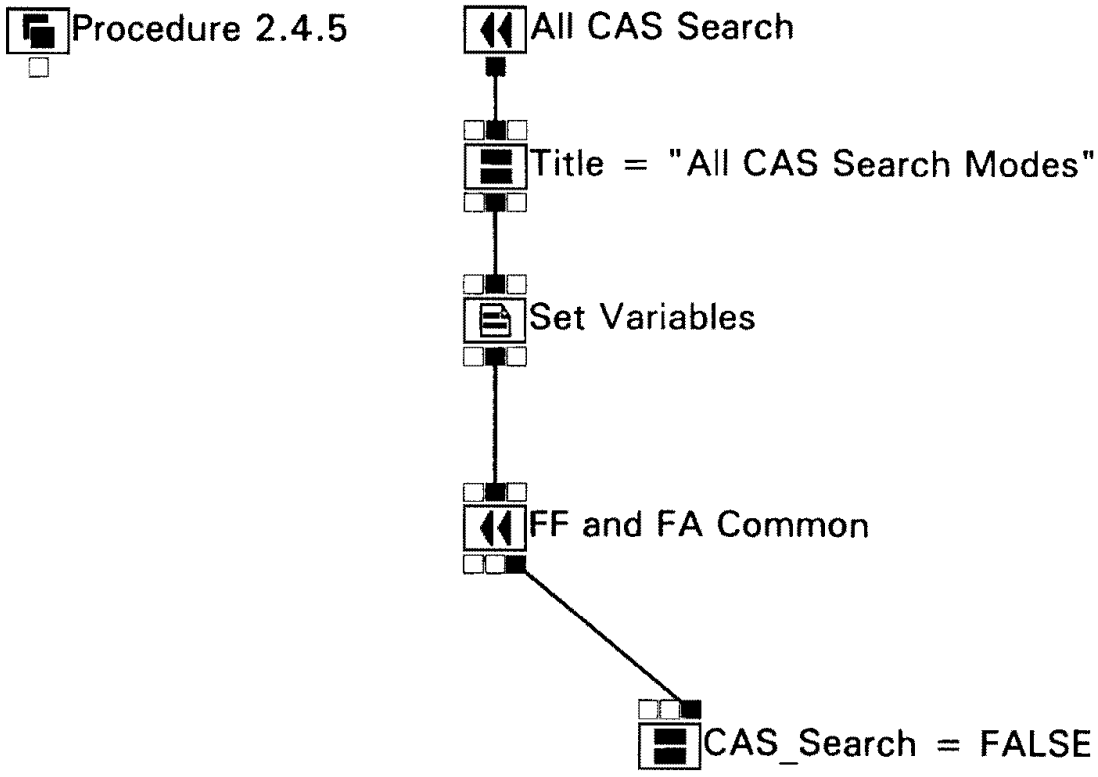
Procedure 2.4.5
All CAS Search
Title = "All CAS Search Modes"
Set Variables
FF and FA Common
CAS_Search = FALSE

Name:	**ALL CAS SEARCH**
Number:	2.4.5
Description:	This procedure sets variable values to utilize a common procedure shared with All CAS Track.
Called By:	Cal Paths A
Calls:	FF and FA Common
Expert Drawing:	There is no corresponding Expert Drawing page number.

CUSTOM NODE SCRIPTS

SET VARIABLES

```
Track_Search = "Search";
Card1 = "FL2";
Card2 = "U4";
Card3 = " ";
Card4 = "A2";
Card5 = "V-S1";
Card6 = "T-U1A7";
Card7 = "T-U1A5";
Card8 = "V-U1";

dB1 = "-6";
dB2 = "-19 to -6";
dB3 = "-17 to -4";
dB4 = "+1.5";

Cable1 = "P1W23P2";
Cable2 = "P1W15P2";
Cable3 = "A2P11";
Cable4 = "W15";
Cable5 = "W23";

TP1 = "5";
TP2 = "9";
TP3 = "TP 16 of UD 401/T-U1A7";
TP4 = "7";
TP5 = "21";
TP6 = "6";
TP7 = "TP16";
CP1 ="CP2";
Logic1 = "'1'";
Logic2 = "'0'";
```

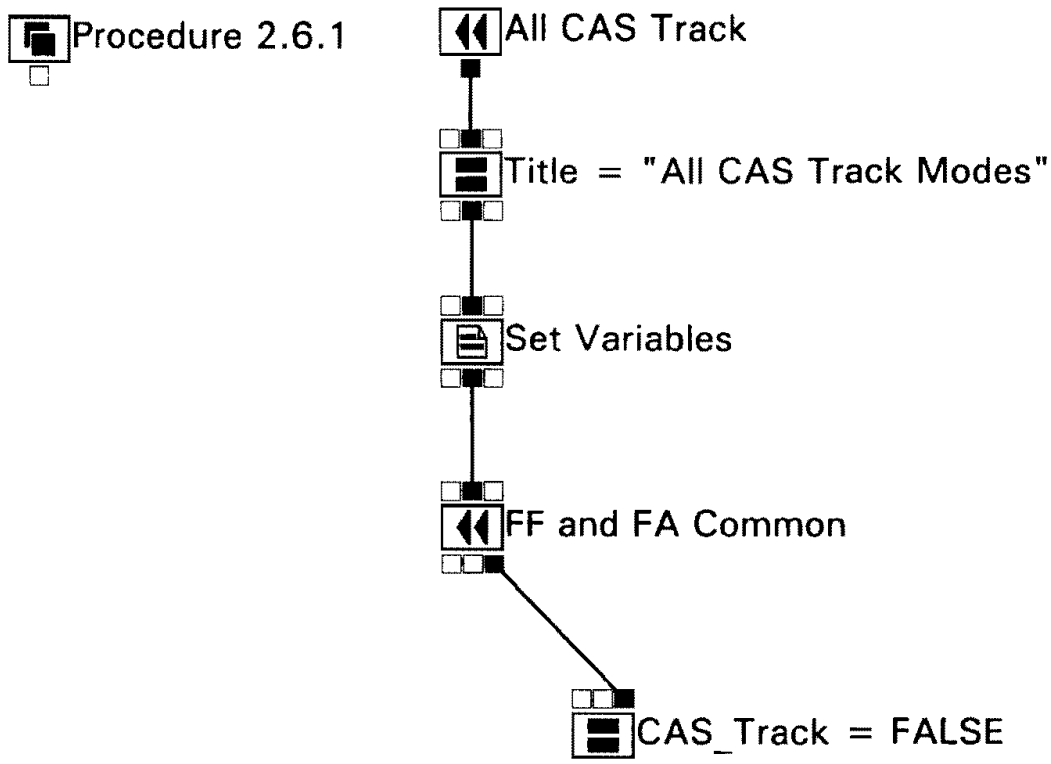
Procedure 2.6.1
All CAS Track
Title = "All CAS Track Modes"
Set Variables
FF and FA Common
CAS_Track = FALSE

Name:	**ALL CAS TRACK**
Number:	2.6.1
Description:	This procedure sets variable values to utilize a common procedure shared with All CAS Search.
Called By:	Cal Paths C
Calls:	FF and FA Common
Expert Drawing:	There is no corresponding Expert Drawing page number.

CUSTOM NODE SCRIPTS

SET VARIABLES

```
Track_Search = "Track";
Card1 = "FL1";
Card2 = "U3";
Card3 = "CP1";
Card4 = "A1";
Card5 = "D-U251";
Card6 = "D-U3A7";
Card7 = "D-U3A5";
Card8 = "D-U2U1";

dB1 = "0";
dB2 = "-13 to 0";
dB3 = "-11 to +2";
dB4 = "+5";

Cable1 = "P1W2P2";
Cable2 = "P1W14P2";
Cable3 = "A2P13";
Cable4 = "W14";
Cable5 = "W24";

TP1 = "15";
TP2 = "21";
TP3 = "Input of RF Power Head";
TP4 = "17";
TP5 = "22";
TP6 = "22";
TP7 = "UD401/D-J4 pin C";
CP1 = "CP1";
Logic1 = "'0'";
Logic2 = "'1'";
```

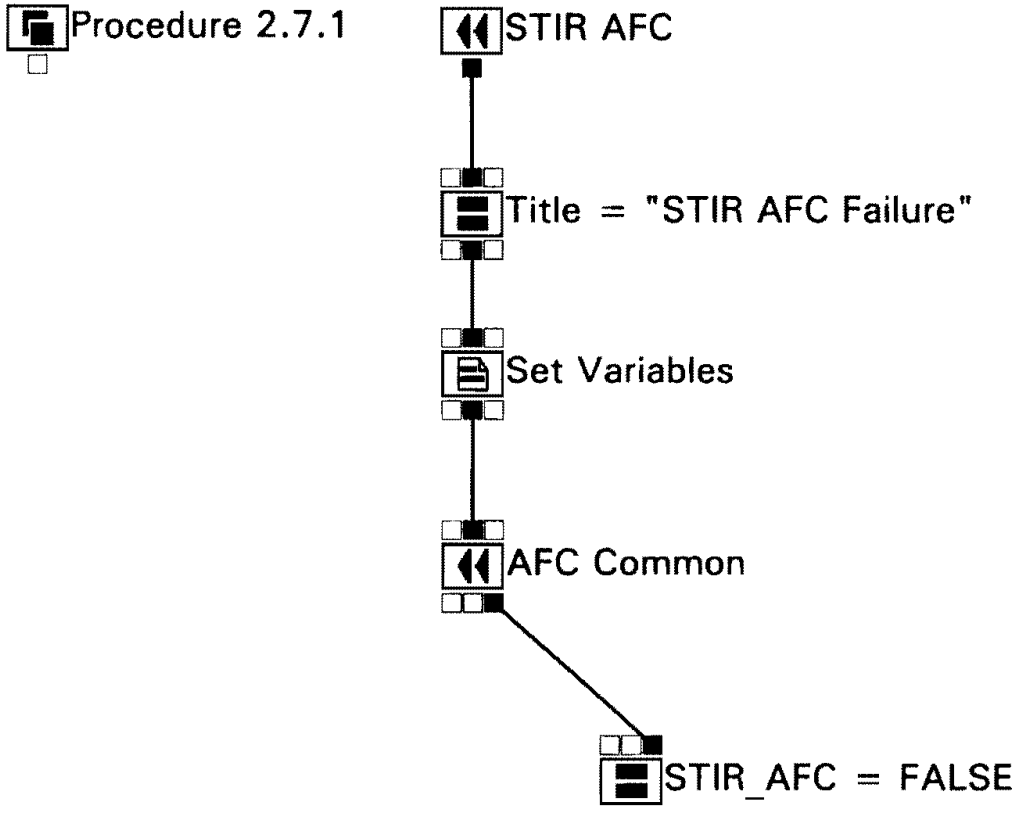
Procedure 2.7.1
STIR AFC
Title = "STIR AFC Failure"
Set Variables
AFC Common
STIR_AFC = FALSE

Name:	**STIR AFC**
Number:	2.7.1
Description:	This procedure is called when the user checks off the STIR AFC box on the Printout Entry Menu or selects it from the Manual Menu list box. It then sets variable values to utilize a common procedure shared with CAS AFC.
Called By:	Cal Paths D
Calls:	AFC Common
Expert Drawing:	There is no corresponding Expert Drawing page number.

CUSTOM NODE SCRIPTS

SET VARIABLES

```
CAS_STIR = "STIR";

Card1 = "432";
Card2 = "481";

Cable1 = "1052-1";

SFO1 = "SFO-14-24, SH2";

Fig1 = "2-161";
Fig2 = "2-170";
Fig3 = "2-162";

Item1 = "94";
Item2 = "151";

Page1 = "2-1279";
```

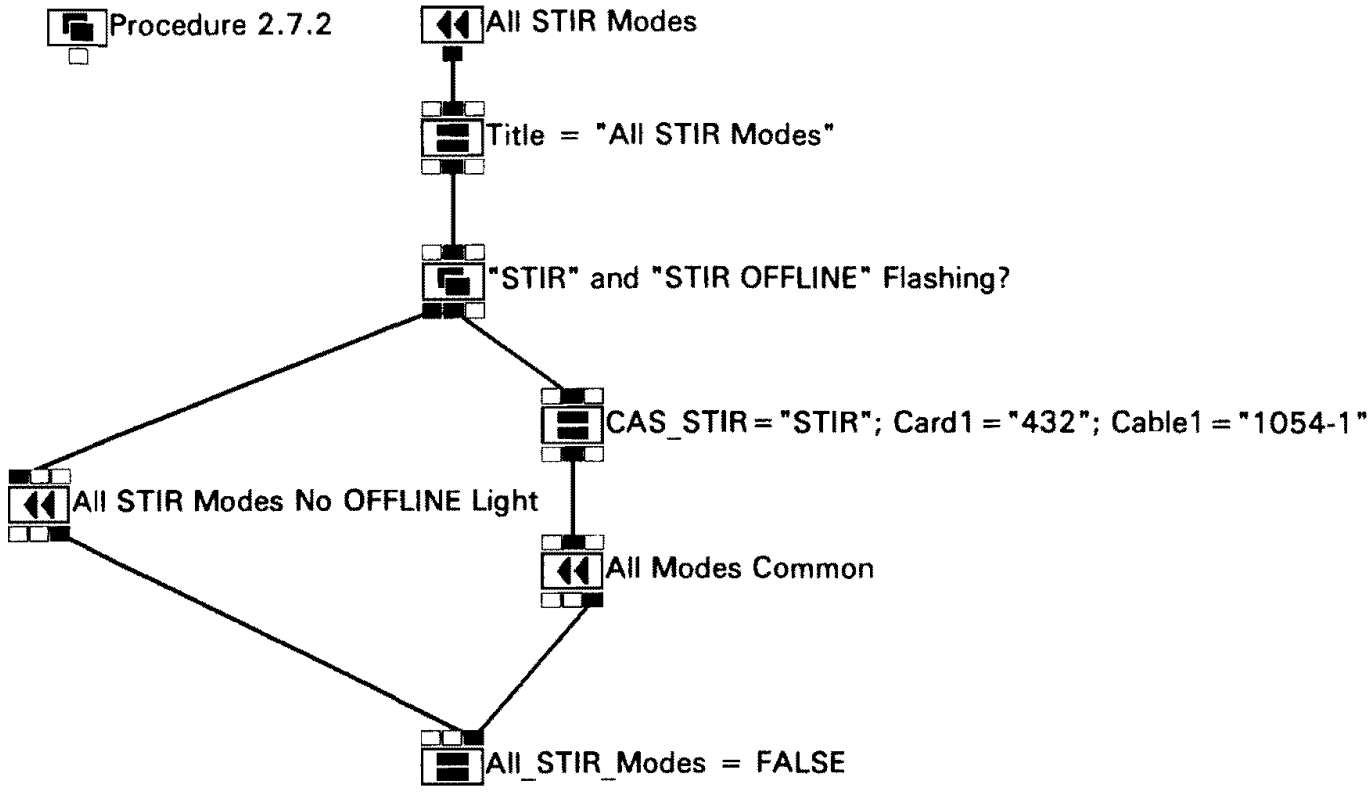
Procedure 2.7.2
All STIR Modes
Title = "All STIR Modes"
"STIR" and "STIR OFFLINE" Flashing?
CAS_STIR = "STIR"; Card1 = "432"; Cable1 = "1054-1"
All STIR Modes No OFFLINE Light
All Modes Common
All_STIR_Modes = FALSE

Name:	**ALL STIR MODES**
Number:	2.7.2
Description:	This procedure is called by Cal Paths D when indications checked off on the Printout Entry Menu match the path selection criteria or the user selects it from the Manual Menu list box. It calls either All STIR Modes No OFFLINE Light, or sets variable values to utilize All Modes Common, which it shares with All CAS Modes.
Called By:	Cal Paths D
Calls:	All Modes Common, All STIR Modes No OFFLINE Light
Expert Drawing:	This procedure corresponds in part to Expert Drawing page SH3B.

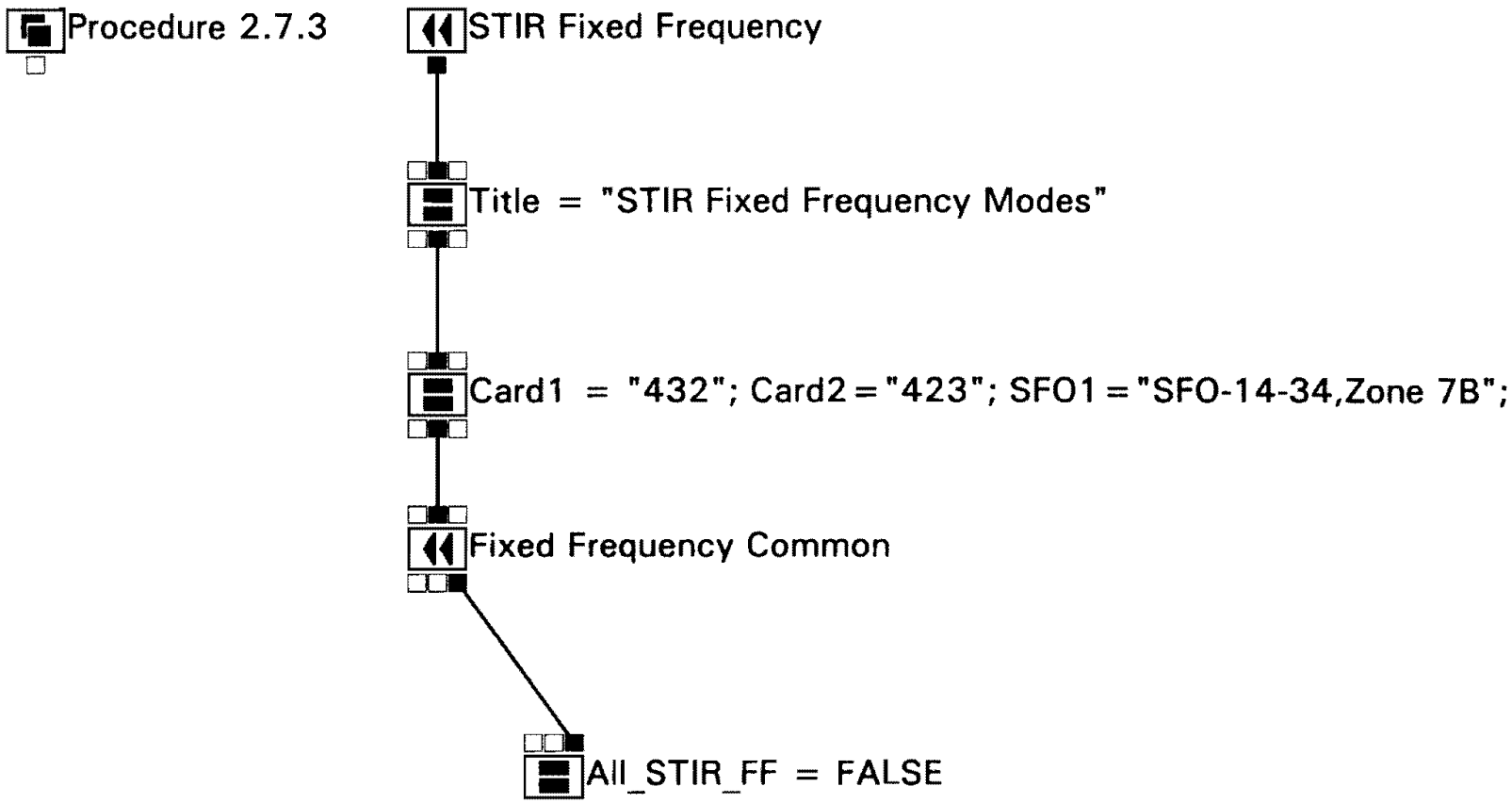
Procedure 2.7.3
STIR Fixed Frequency
Title = "STIR Fixed Frequency Modes"
Card1 = "432"; Card2 = "423"; SFO1 = "SFO-14-34,Zone 7B";
Fixed Frequency Common
All_STIR_FF = FALSE

Name:	**STIR FIXED FREQUENCY**
Number:	2.7.3
Description:	This procedure sets variable values to utilize a common procedure shared with CAS Fixed Frequency.
Called By:	Cal Paths D
Calls:	Fixed Frequency Common
Expert Drawing:	There is no corresponding Expert Drawing page number.

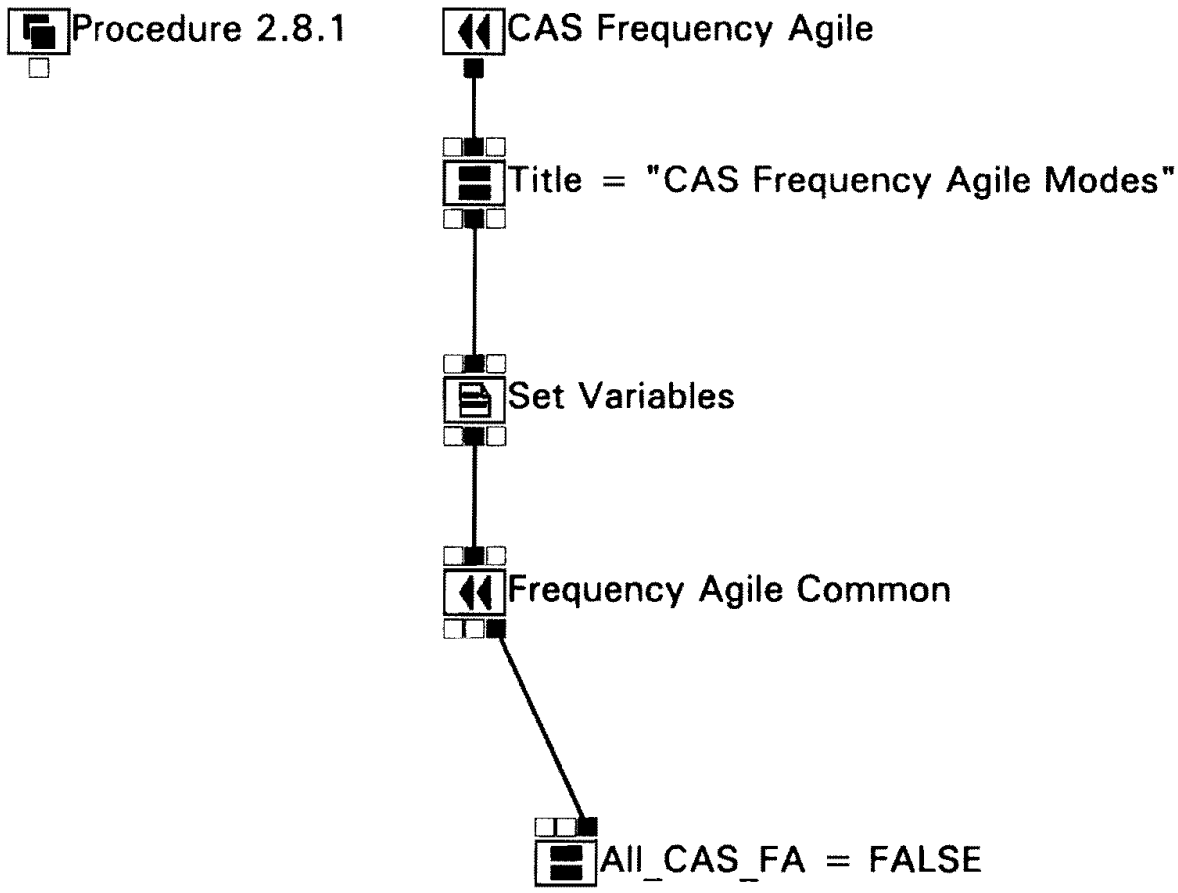
Procedure 2.8.1
CAS Frequency Agile
Title = "CAS Frequency Agile Modes"
Set Variables
Frequency Agile Common
All_CAS_FA = FALSE

Name:	**CAS FREQUENCY AGILE**
Number:	2.8.1
Description:	This procedure sets variable values to utilize a common procedure shared with STIR Frequency Agile.
Called By:	Cal Paths E
Calls:	Frequency Agile Common
Expert Drawing:	There is no corresponding Expert Drawing page number.

CUSTOM NODE SCRIPTS

SET VARIABLES

```
CAS_STIR = "CAS";

Card1 = "403";
Card2 = "412";

Fig1 = "4-45";
Fig2 = "4-30";

Para1 = "4-54";

Page1 = "4-5-106";
```

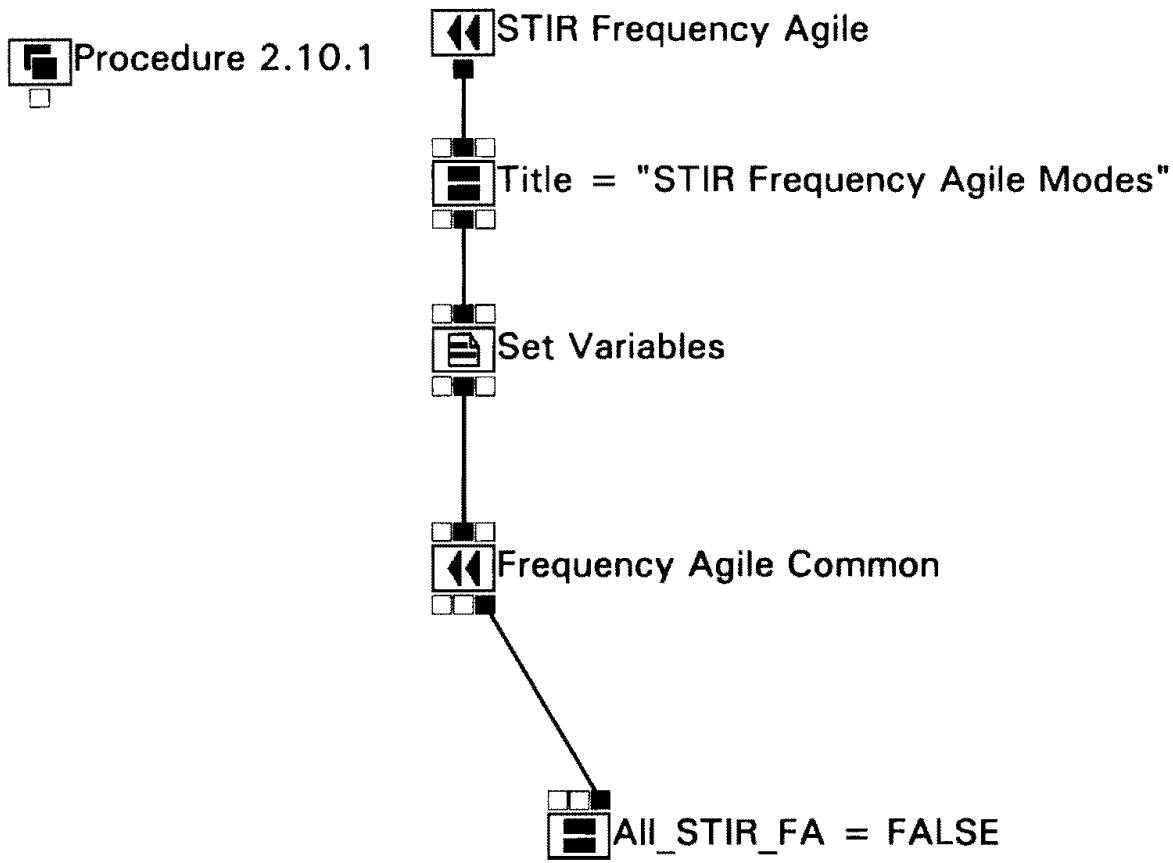
Procedure 2.10.1
STIR Frequency Agile
Title = "STIR Frequency Agile Modes"
Set Variables
Frequency Agile Common
All_STIR_FA = FALSE

Name:	**STIR FREQUENCY AGILE**
Number:	2.10.1
Description:	This procedure sets variable values to utilize a common procedure shared with CAS Frequency Agile.
Called By:	Cal Paths G
Calls:	Frequency Agile Common
Expert Drawing:	There is no corresponding Expert Drawing page number.

CUSTOM NODE SCRIPTS

SET VARIABLES

```
CAS_STIR = "STIR";

Card1 = "423";
Card2 = "432";

Fig1 = "4-84";
Fig2 = "4-118";

Para1 = "4-174";

Page1 = "4-5-246";
```

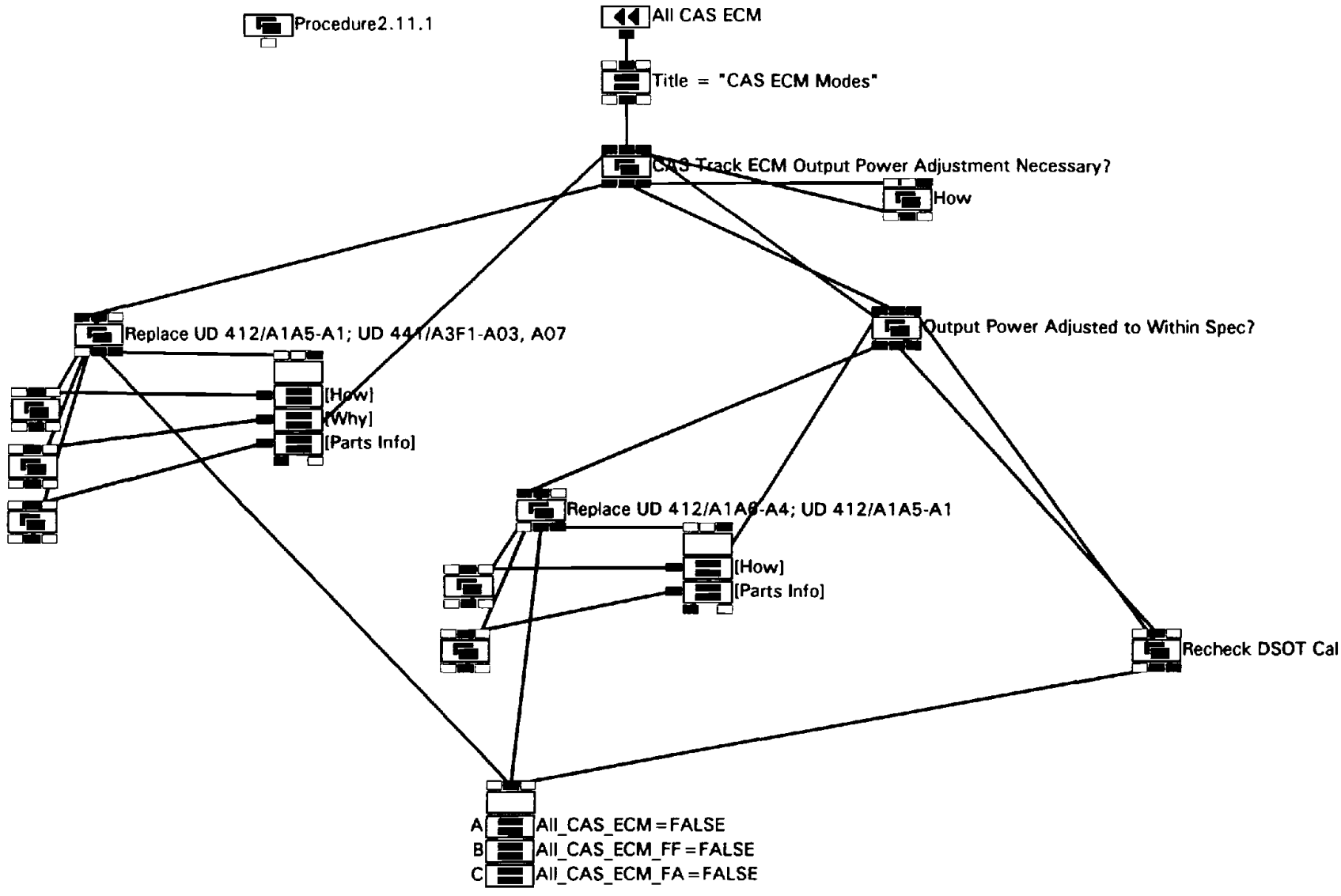
Procedure2.11.1
All CAS ECM
Title = "CAS ECM Modes"
CAS Track ECM Output Power Adjustment Necessary?
How
Replace UD 412/A1A5-A1; UD 441/A3F1-A03, A07
[How]
[Why]
[Parts Info]
Output Power Adjusted to Within Spec?
Replace UD 412/A1A5-A4; UD 412/A1A5-A1
[How]
[Parts Info]
Recheck DSOT Cal
A All_CAS_ECM=FALSE
B All_CAS_ECM_FF=FALSE
C All_CAS_ECM_FA=FALSE

Name:	**ALL CAS ECM**
Number:	2.11.1
Description:	This procedure is accessed either through the Printout Entry Menu or the list box in the Manual Menu.
Called By:	Cal Paths H
Calls:	None
Expert Drawing:	This procedure corresponds to Expert Drawing page SH2S.

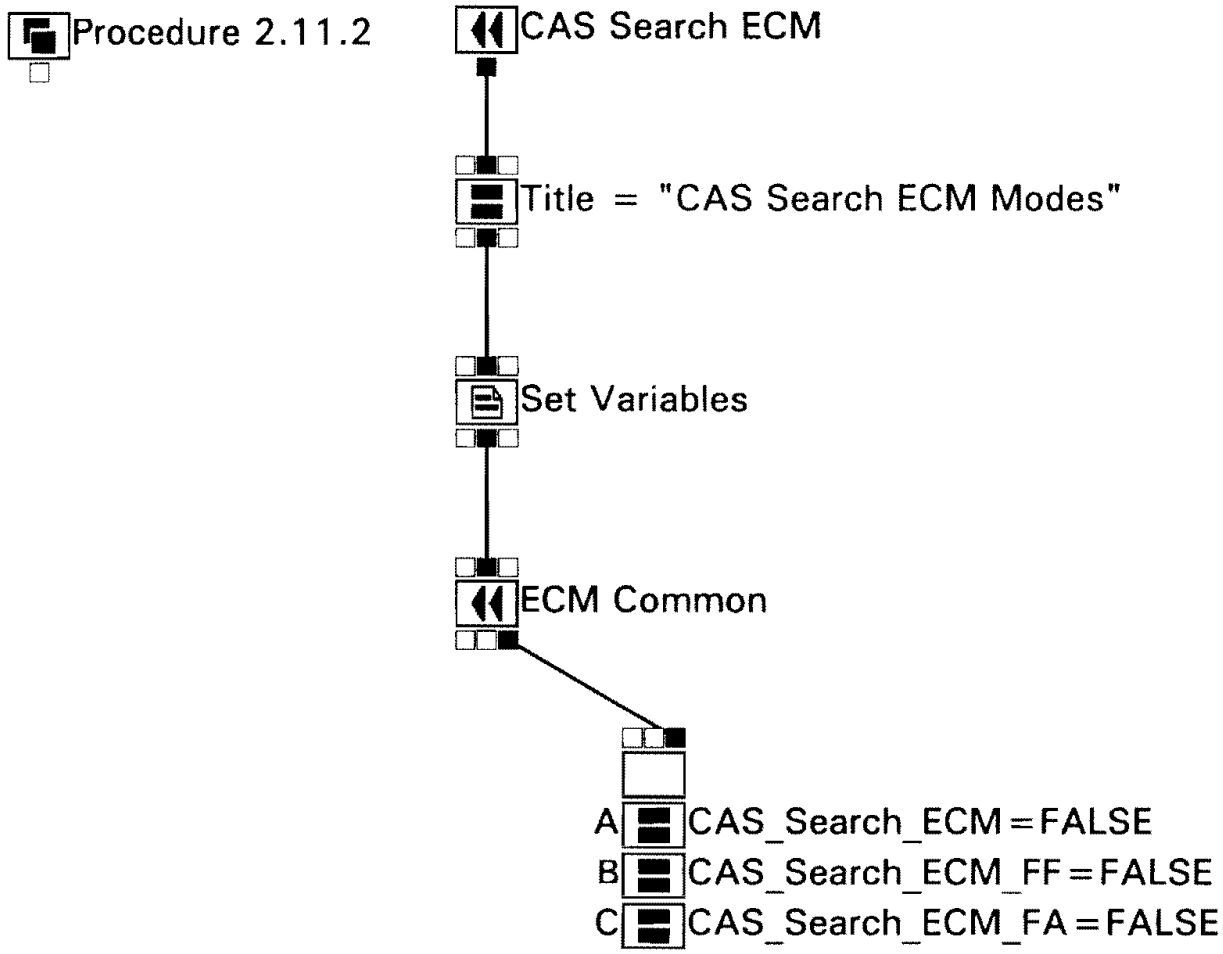
Procedure 2.11.2
CAS Search ECM
Title = "CAS Search ECM Modes"
Set Variables
ECM Common
A CAS_Search_ECM = FALSE
B CAS_Search_ECM_FF = FALSE
C CAS_Search_ECM_FA = FALSE

Name:	**CAS SEARCH ECM**
Number:	2.11.2
Description:	This procedure sets variable values to utilize a common procedure shared with CAS Track ECM and STIR Track ECM.
Called By:	Cal Paths H
Calls:	ECM Common
Expert Drawing:	There is no corresponding Expert Drawing page number.

CUSTOM NODE SCRIPTS

SET VARIABLES

```
CAS_STIR = "CAS";

Track_Search = "Search";

Card1 = "412";
Card2 = "A2";
Card3 = "A6";

Cable1 = "P1W21P2";
Cable2 = "A2P11";
Cable3 = "W21P2";

dB1 = "-18";
dB2 = "-9.0 +/- 1.0";

FL1 = "FL2";
```

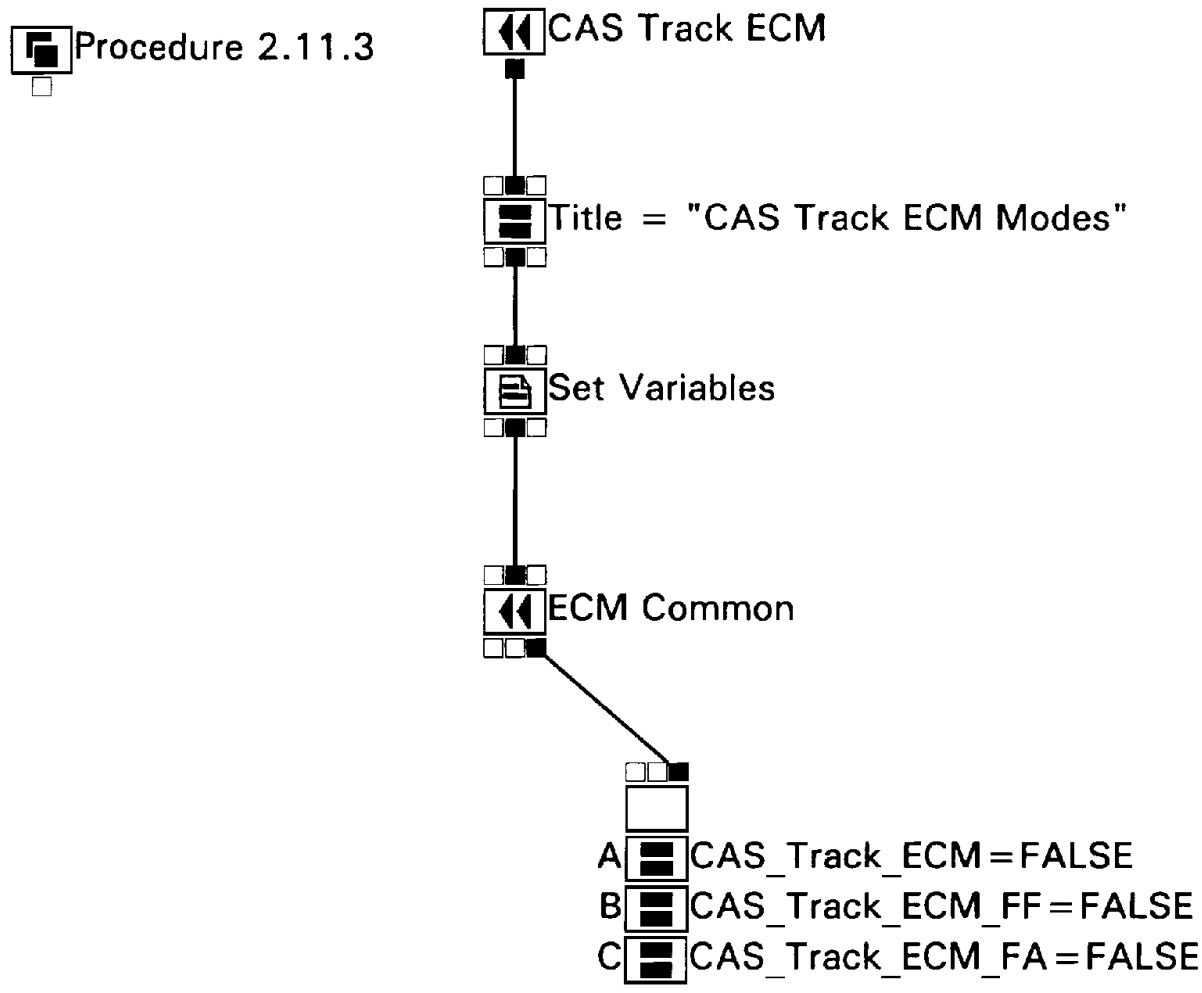
Procedure 2.11.3
CAS Track ECM
Title = "CAS Track ECM Modes"
Set Variables
ECM Common
A CAS_Track_ECM=FALSE
B CAS_Track_ECM_FF=FALSE
C CAS_Track_ECM_FA=FALSE

Name:	**CAS TRACK ECM**
Number:	2.11.3
Description:	This procedure sets variable values to utilize a common procedure shared with CAS Search ECM and STIR Track ECM.
Called By:	Cal Paths H
Calls:	ECM Common
Expert Drawing:	There is no corresponding Expert Drawing page number.

CUSTOM NODE SCRIPTS

SET VARIABLES

```
CAS_STIR = "CAS";

Track_Search = "Track";

Card1 = "412";
Card2 = "A1";
Card3 = "A5";

Cable1 = "P1W20P2";
Cable2 = "A2P13";
Cable3 = "W20P2";

dB1 = "-17";
dB2 = "-9.8 +/- 0.2";

FL1 = "FL1";
```

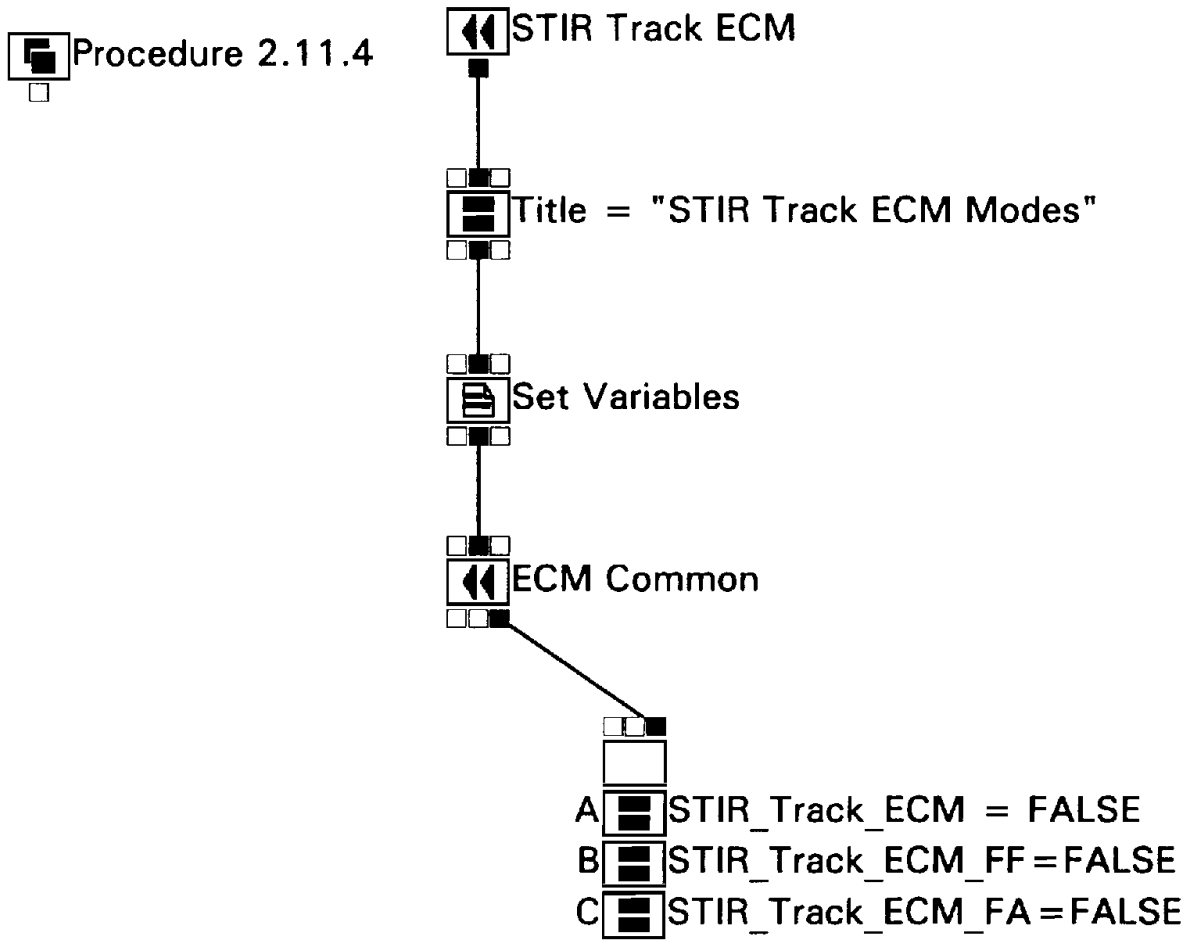
Procedure 2.11.4
STIR Track ECM
Title = "STIR Track ECM Modes"
Set Variables
ECM Common
A STIR_Track_ECM = FALSE
B STIR_Track_ECM_FF = FALSE
C STIR_Track_ECM_FA = FALSE

Name:	**STIR TRACK ECM**
Number:	2.11.4
Description:	This procedure sets variable values to utilize a common procedure shared with CAS Search ECM and CAS Track ECM.
Called By:	Cal Paths H
Calls:	ECM Common
Expert Drawing:	There is no corresponding Expert Drawing page number.

CUSTOM NODE SCRIPTS

SET VARIABLES

```
CAS_STIR = "STIR";

Track_Search = "Track";

Card1 = "432";
Card2 = "A1";
Card3 = "A5";

Cable1 = "P1W20P2";
Cable2 = "A2P13";
Cable3 = "W20P2";

dB1 = "-17";
dB2 = "-9.8 +/- 0.2";

FL1 = "FL1";
```

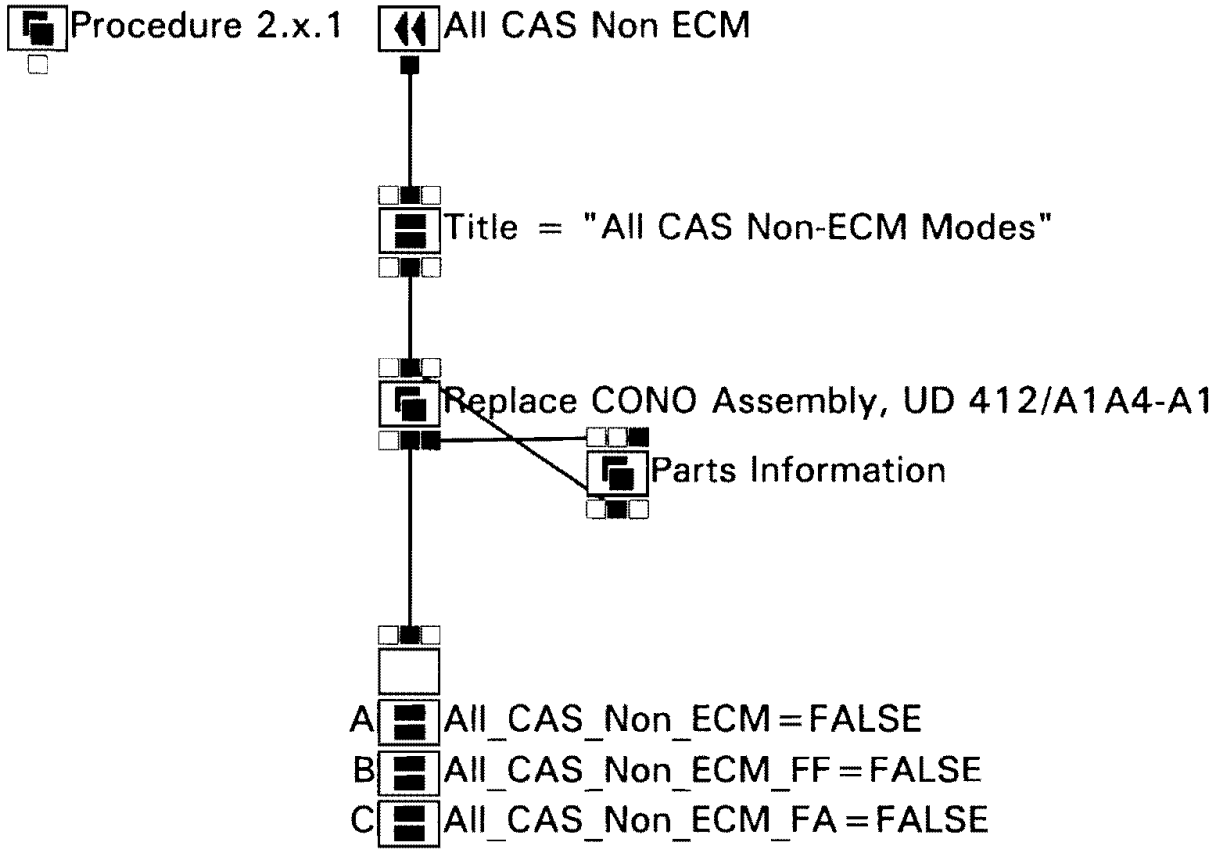
Procedure 2.x.1
All CAS Non ECM
Title = "All CAS Non-ECM Modes"
Replace CONO Assembly, UD 412/A1A4-A1
Parts Information
A All_CAS_Non_ECM=FALSE
B All_CAS_Non_ECM_FF=FALSE
C All_CAS_Non_ECM_FA=FALSE

Name:	**ALL CAS NON ECM**
Number:	2.x.1
Description:	This procedure is accessed either through the Printout Entry Menu or the list box in the Manual Menu.
Called By:	Cal Paths A, Cal Paths E
Calls:	None
Expert Drawing:	This procedure corresponds to Expert Drawing page SH2T.

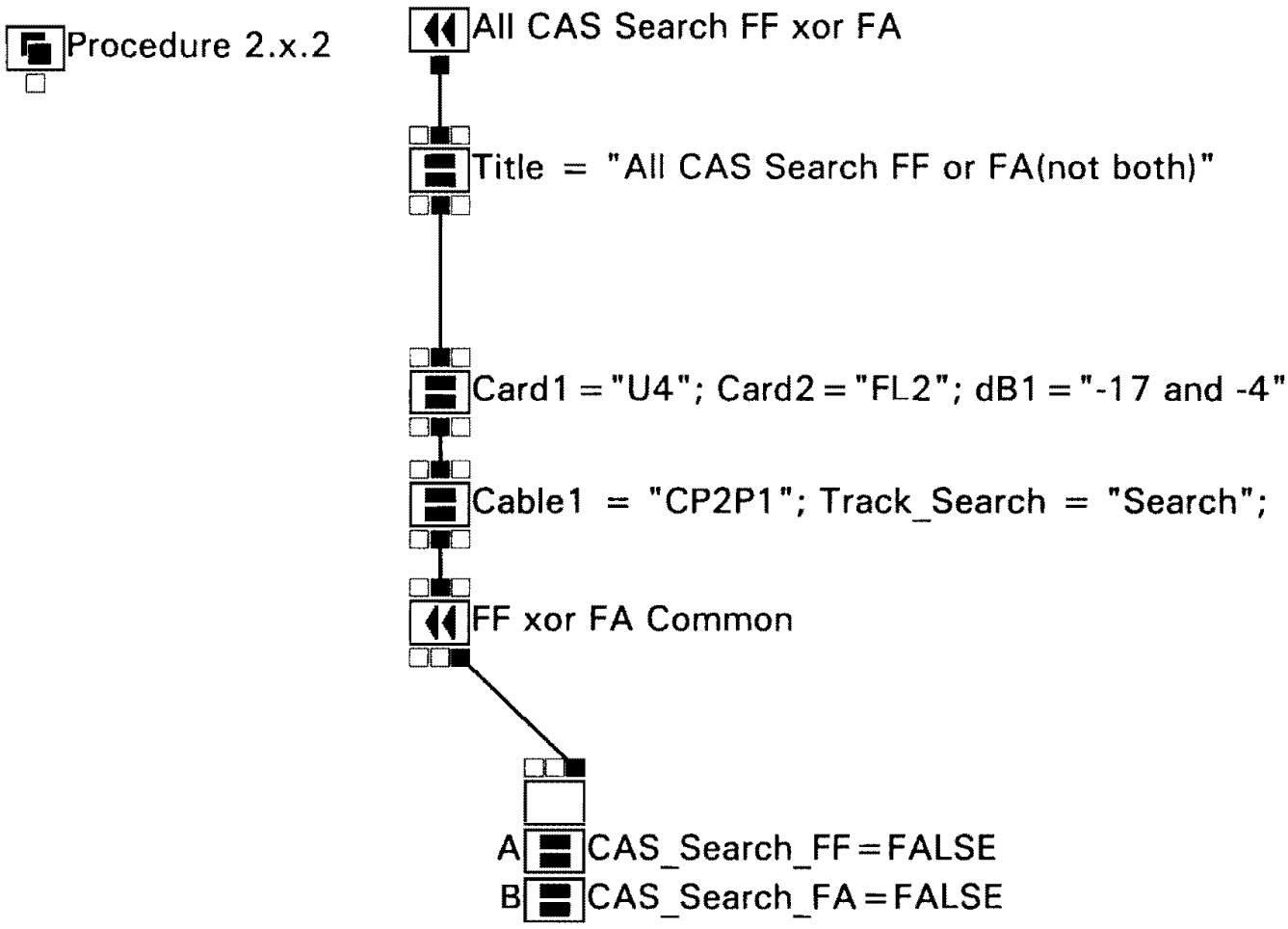
Procedure 2.x.2
All CAS Search FF xor FA
Title = "All CAS Search FF or FA(not both)"
Card1 = "U4"; Card2 = "FL2"; dB1 = "-17 and -4"
Cable1 = "CP2P1"; Track_Search = "Search";
FF xor FA Common
A CAS_Search_FF = FALSE
B CAS_Search_FA = FALSE

Name:	**ALL CAS SEARCH FF XOR FA**
Number:	2.x.2
Description:	This procedure sets variable values to utilize a common procedure shared with All CAS Track FF xor FA.
Called By:	Cal Paths A, Cal Paths F
Calls:	FF xor FA Common
Expert Drawing:	There is no corresponding Expert Drawing page number.

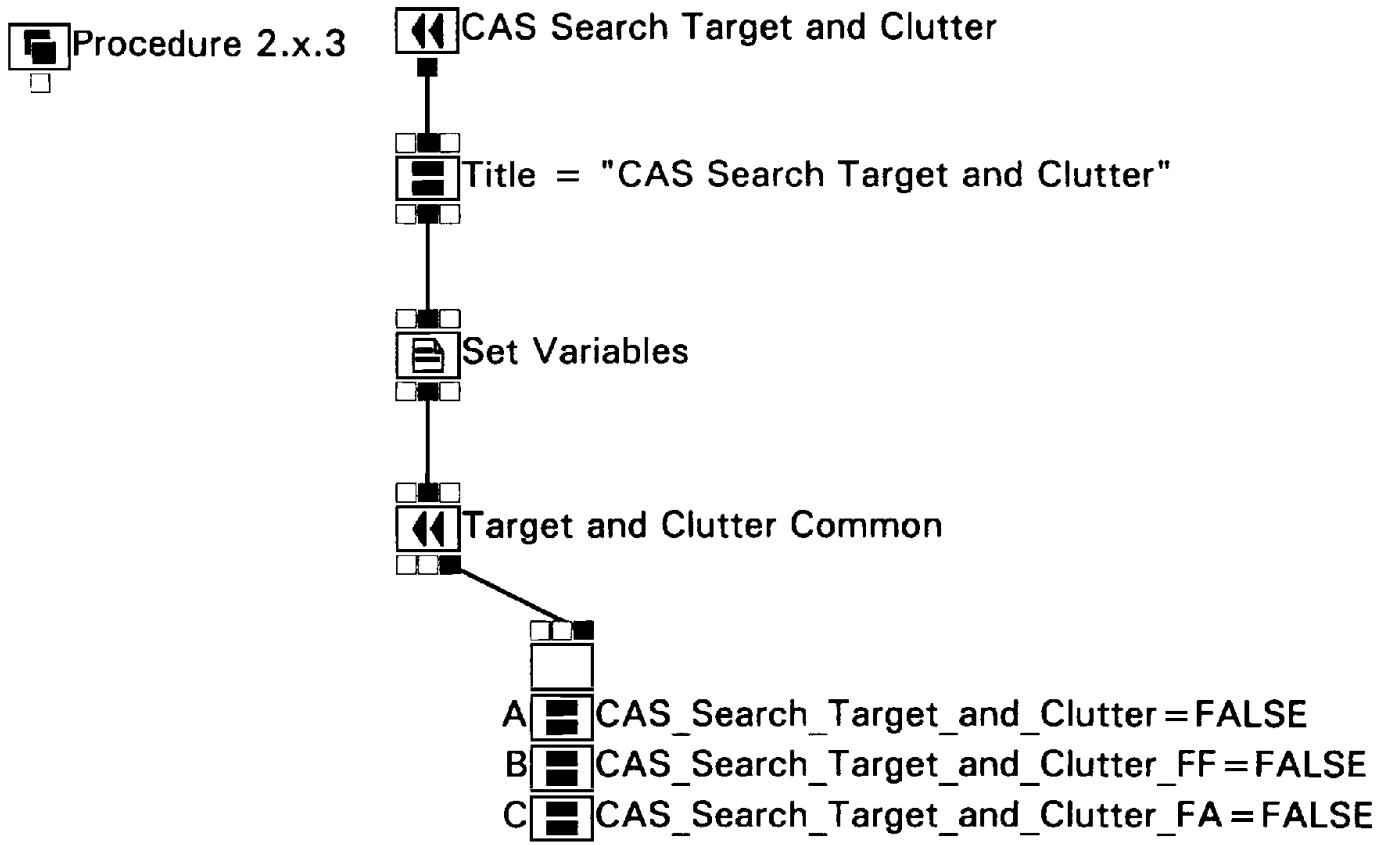
Procedure 2.x.3
CAS Search Target and Clutter
Title = "CAS Search Target and Clutter"
Set Variables
Target and Clutter Common
A CAS_Search_Target_and_Clutter = FALSE
B CAS_Search_Target_and_Clutter_FF = FALSE
C CAS_Search_Target_and_Clutter_FA = FALSE

Name:	**CAS SEARCH TARGET AND CLUTTER**
Number:	2.x.3
Description:	This procedure sets variable values to utilize a common procedure shared with CAS Track Target and Clutter and STIR Track Target and Clutter.
Called By:	Cal Paths B, Cal Paths F
Calls:	Target and Clutter Common
Expert Drawing:	There is no corresponding Expert Drawing page number.

CUSTOM NODE SCRIPTS

SET VARIABLES

```
Card1 = "412";
Card2 = "FL2";
Card3 = "U2";
Card4 = "A2";
Card5 = "A2";
Card6 = "AR2";
Card7 = "AR2";
Card8 = " ";

Cable1 = "P1W13P2";
Cable2 = "P1W19P2":
Cable3 = "P1W11P2";
Cable4 = "A2P11";
Cable5 = "W13";
Cable6 = "W11";
CAble7 = "W19";

dB1 = "-19 to 6";
dB2 = "+1.5";
dB3 = "?";
dB4 = "-4.5";

J1 = "J3";

On_Off1 = "OFF";
On_Off2 = "ON";
```

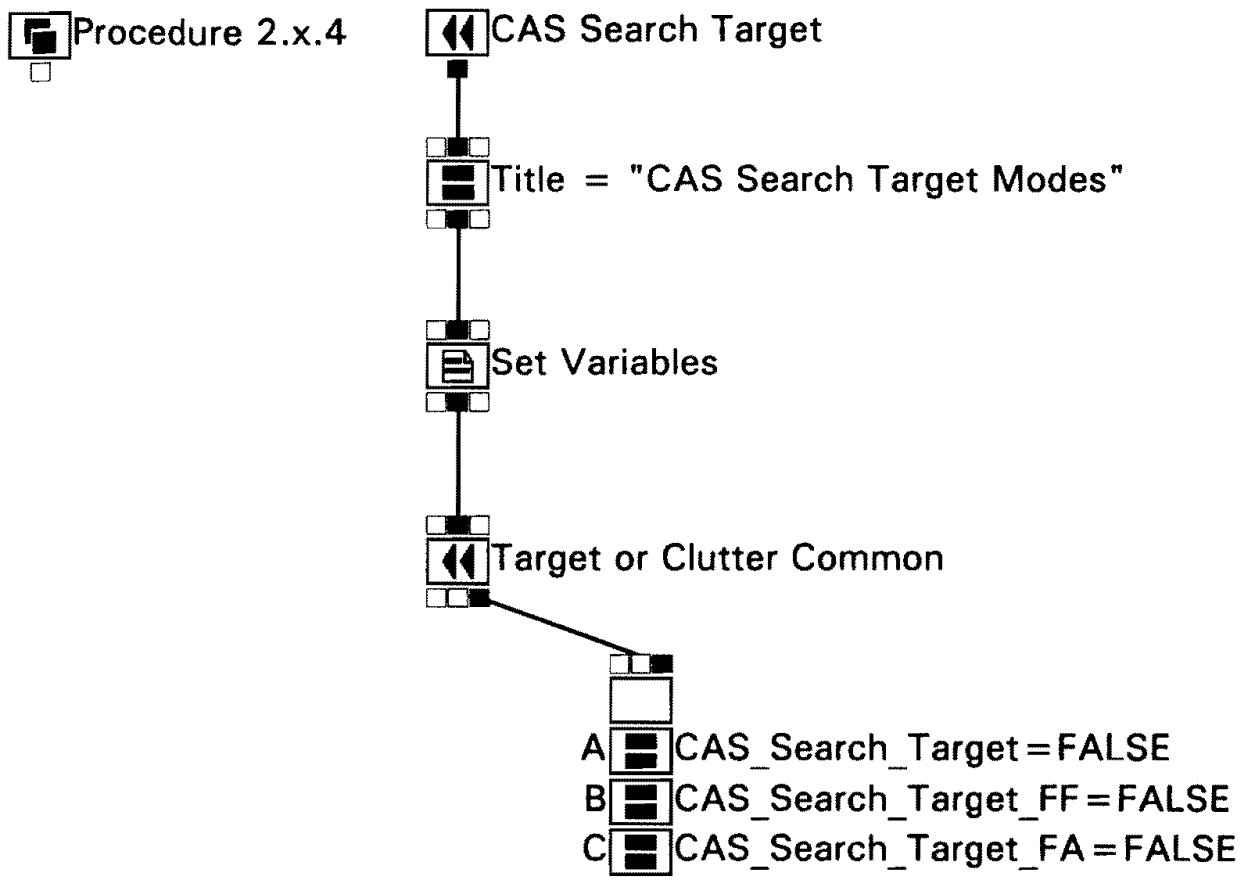
Procedure 2.x.4
CAS Search Target
Title = "CAS Search Target Modes"
Set Variables
Target or Clutter Common
A CAS_Search_Target=FALSE
B CAS_Search_Target_FF=FALSE
C CAS_Search_Target_FA=FALSE

Name:	**CAS SEARCH TARGET**
Number:	2.x.4
Description:	This procedure sets variable values to utilize a common procedure shared with CAS Search Clutter, CAS Track Target, CAS Track Clutter, STIR Track Target, and STIR Track Clutter.
Called By:	Cal Paths B, Cal Paths F
Calls:	Target or Clutter Common
Expert Drawing:	There is no corresponding Expert Drawing page number.

CUSTOM NODE SCRIPTS

SET VARIABLES

```
CAS_STIR = "CAS";
Track_Search = "Search";
Target_Clutter = "Target";

Card1 = "412";
Card2 = "A2";
Card3 = "A/04";
Card4 = " ";
Card5 = "AR2";
Card6 = "Z3";
Card7 = "A6";
Card8 = "432";
Card9 = "A/06";
Card10 = " ";

Cable1 = "W7";
Cable2 = "W6";

dB1 = "1.5";
dB2 = "-10.5";
dB3 = "-11 to -8";

TP1 = "7";

Replace = " ";

PN1 = " ";

On_Off1 = "ON";
On_Off2 = "OFF";

One = "2";
```

```
Two = "1";
Three = "1";

SFO1 = "SFO-14-5, SH1";
SFO2 = "SFO-14-2, SH3";
SFO3 = "SFO-13-23, SH1";
SFO4 = " ";

J42 = "J4";
J1 = "J3";
```

THIS PAGE INTENTIONALLY LEFT BLANK

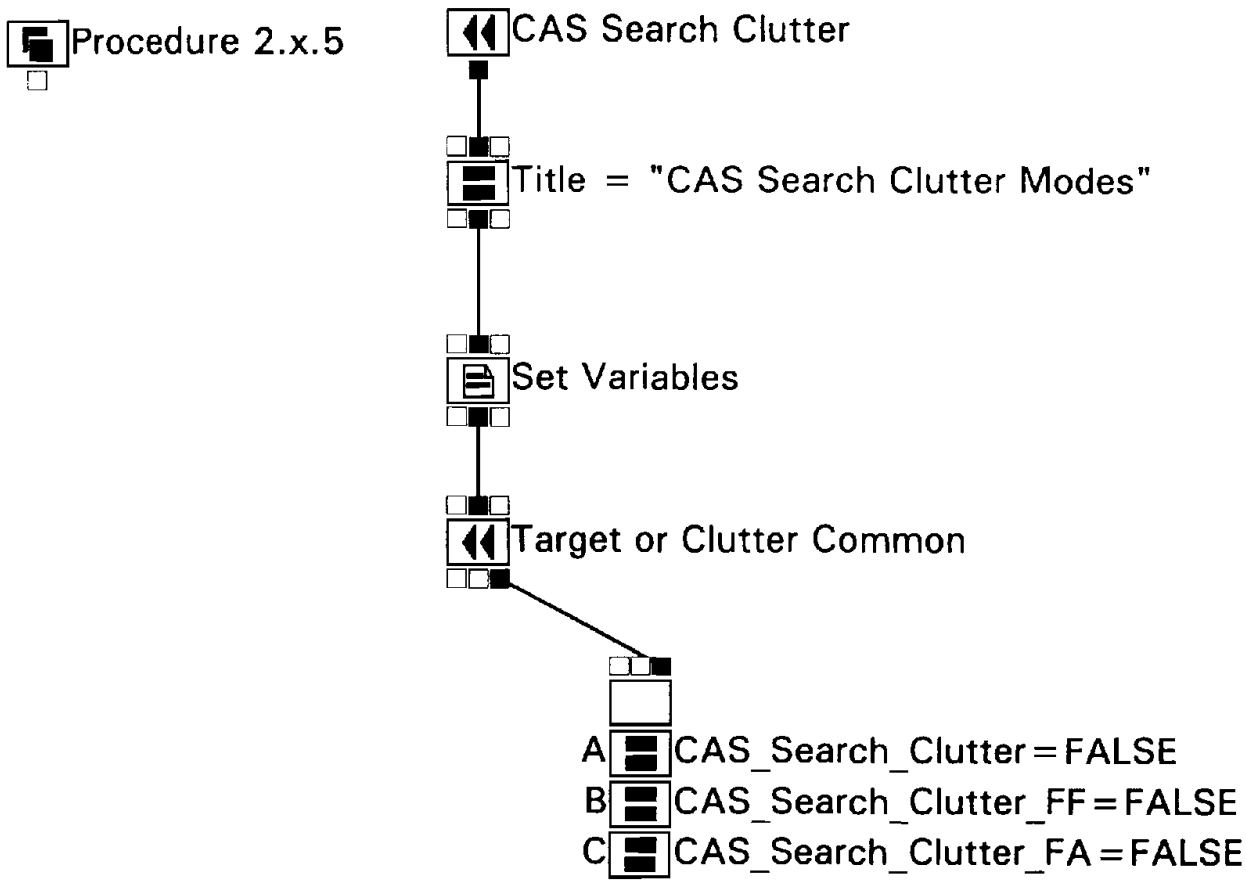
Procedure 2.x.5
CAS Search Clutter
Title = "CAS Search Clutter Modes"
Set Variables
Target or Clutter Common
A CAS_Search_Clutter = FALSE
B CAS_Search_Clutter_FF = FALSE
C CAS_Search_Clutter_FA = FALSE

Name:	**CAS SEARCH CLUTTER**
Number:	2.x.5
Description:	This procedure sets variable values to utilize a common procedure shared with CAS Search Target, CAS Track Target, CAS Track Clutter, STIR Track Target, and STIR Track Clutter.
Called By:	Cal Paths B, Cal Paths F
Calls:	Target or Clutter Common
Expert Drawing:	There is no corresponding Expert Drawing page number.

CUSTOM NODE SCRIPTS

SET VARIABLES

```
CAS_STIR = "CAS";

Track_Search = "Search";

Target_Clutter = "Clutter";

Card1 = "412";
Card2 = "A2";
Card3 = "A/05";
Card4 = "A/11 ";
Card5 = "AR2";
Card6 = "Z4";
Card7 = "A5";
Card8 = "432";
Card9 = "A/06";
Card10 = "UD441/A3F1-A/11";

Cable1 = "W9";
Cable2 = "W5";

dB1 = "1.5";
dB2 = "-10.5";
dB3 = "-11 to -8";

TP1 = "5";

Replace = "None";

PN1 = "5381395-1";

On_Off1 = "OFF";
On_Off2 = "ON";
```

```
One = "2";
Two = "1";
Three = "1";

SFO1 = "SFO-14-5, SH2";
SFO2 = "SFO-14-2, SH3";
SFO3 = "SFO-13-23, SH1";
SFO4 = "SFO-13-28, SH1";

J42 = "J4";
J1 = "J2";
```

THIS PAGE INTENTIONALLY LEFT BLANK

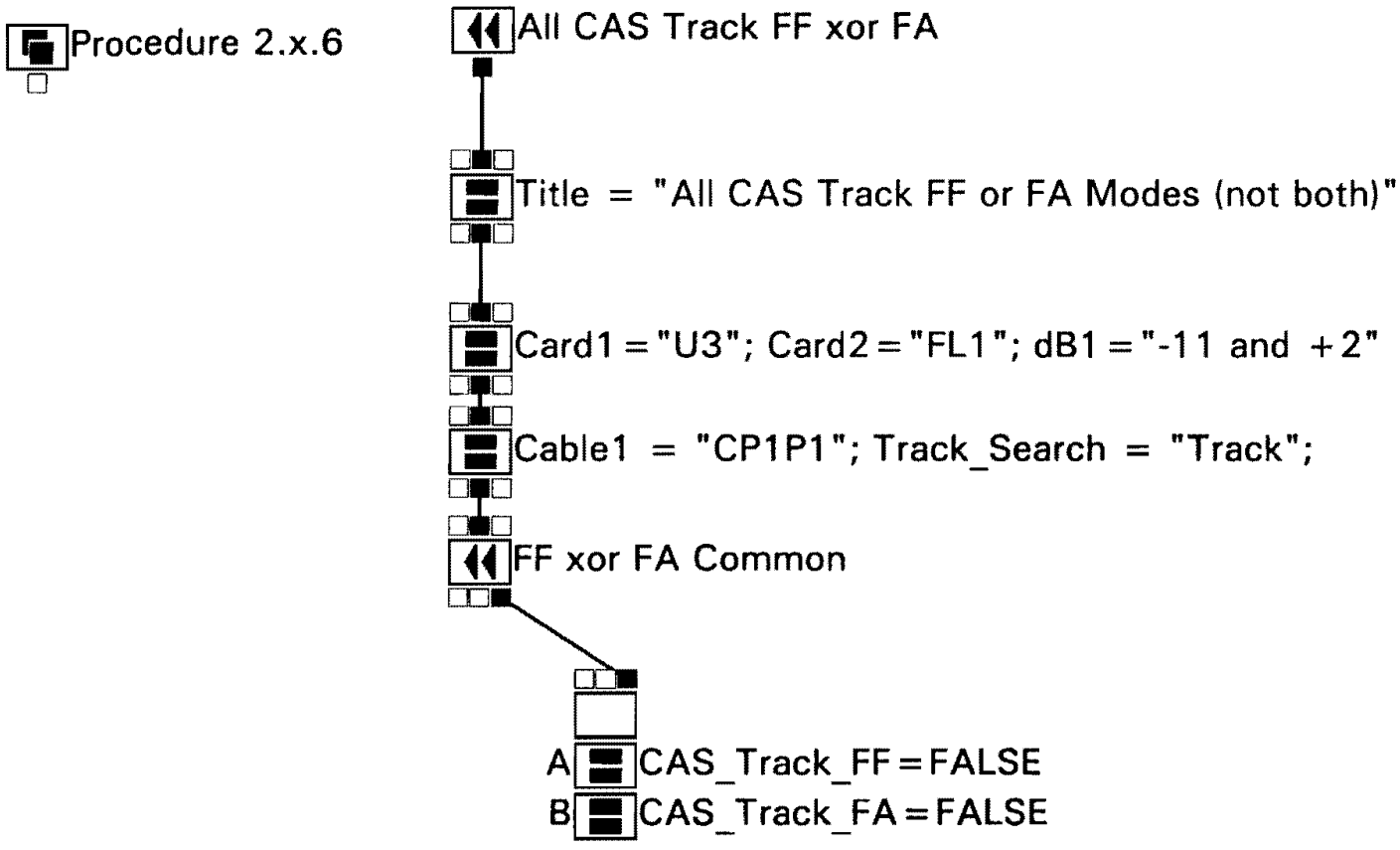
Procedure 2.x.6
All CAS Track FF xor FA
Title = "All CAS Track FF or FA Modes (not both)"
Card1 = "U3"; Card2 = "FL1"; dB1 = "-11 and +2"
Cable1 = "CP1P1"; Track_Search = "Track";
FF xor FA Common
A CAS_Track_FF = FALSE
B CAS_Track_FA = FALSE

Name:	**ALL CAS TRACK FF XOR FA**
Number:	2.x.6
Description:	This procedure sets variable values to utilize a common procedure shared with All CAS Search FF xor FA.
Called By:	Cal Paths C, Cal Paths F
Calls:	FF xor FA Common
Expert Drawing:	There is no corresponding Expert Drawing page number.

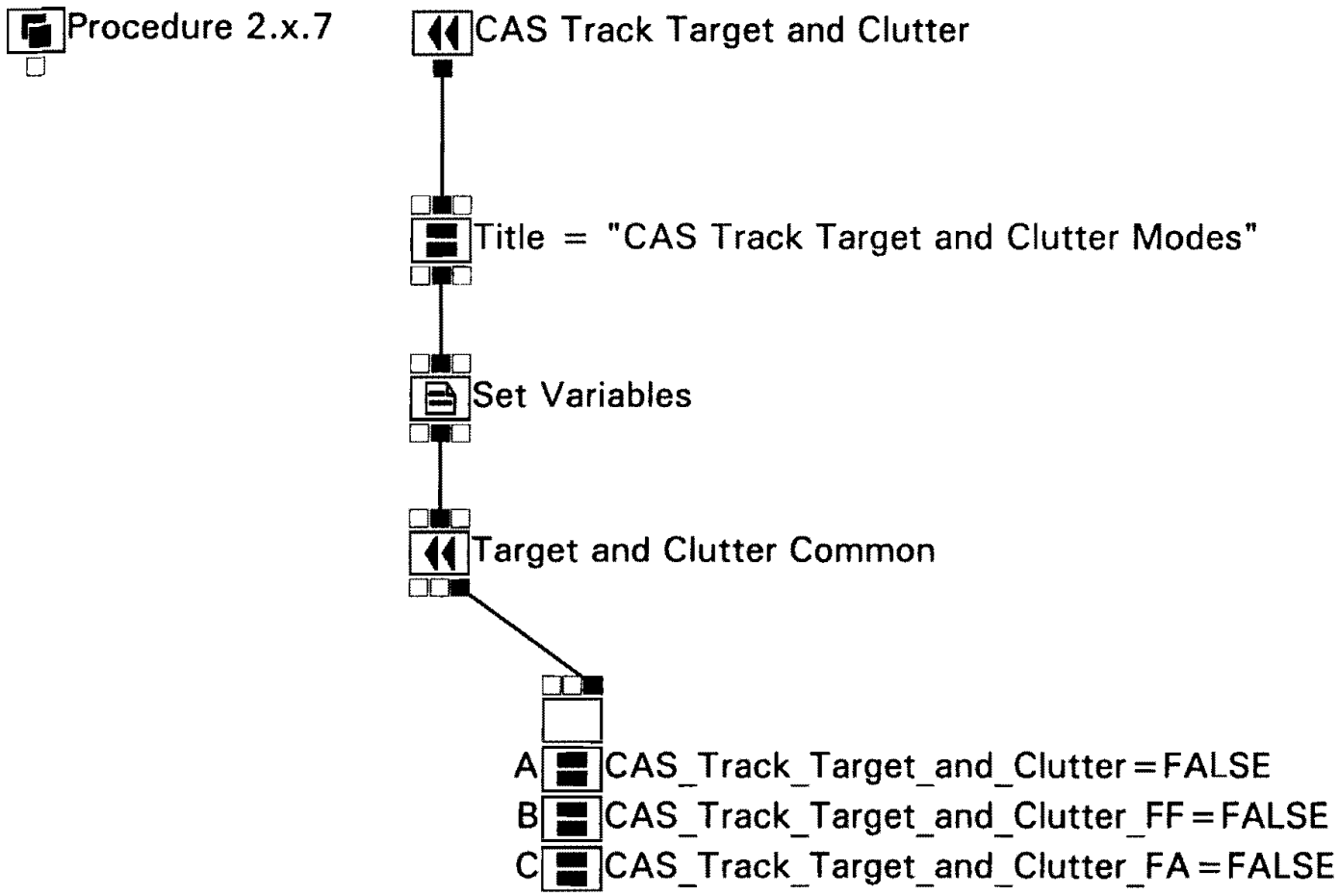
Procedure 2.x.7
CAS Track Target and Clutter
Title = "CAS Track Target and Clutter Modes"
Set Variables
Target and Clutter Common
A CAS_Track_Target_and_Clutter = FALSE
B CAS_Track_Target_and_Clutter_FF = FALSE
C CAS_Track_Target_and_Clutter_FA = FALSE

Name:	**CAS TRACK TARGET AND CLUTTER**
Number:	2.x.7
Description:	This procedure sets variable values to utilize a common procedure shared with CAS Search Target and Clutter and STIR Track Target and Clutter.
Called By:	Cal Paths C, Cal Paths F
Calls:	Target and Clutter Common
Expert Drawing:	There is no corresponding Expert Drawing page number.

CUSTOM NODE SCRIPTS

SET VARIABLES

```
Card1 = "412";
Card2 = "FL1";
Card3 = "U1";
Card4 = "A3";
Card5 = "A1";
Card6 = "AR1";
Card7 = "AR1";
Card8 = " ";

Cable1 = "P1W12P2";
Cable2 = "P1W18P2":
Cable3 = "P1W10P2";
Cable4 = "A2P13";
Cable5 = "W12";
Cable6 = "W10";
CAble7 = "W18";

dB1 = "-13 to 0";
dB2 = "+5";
dB3 = "-17";
dB4 = "-1";

J1 = "J2";

On_Off1 = "ON";
On_Off2 = "OFF";
```

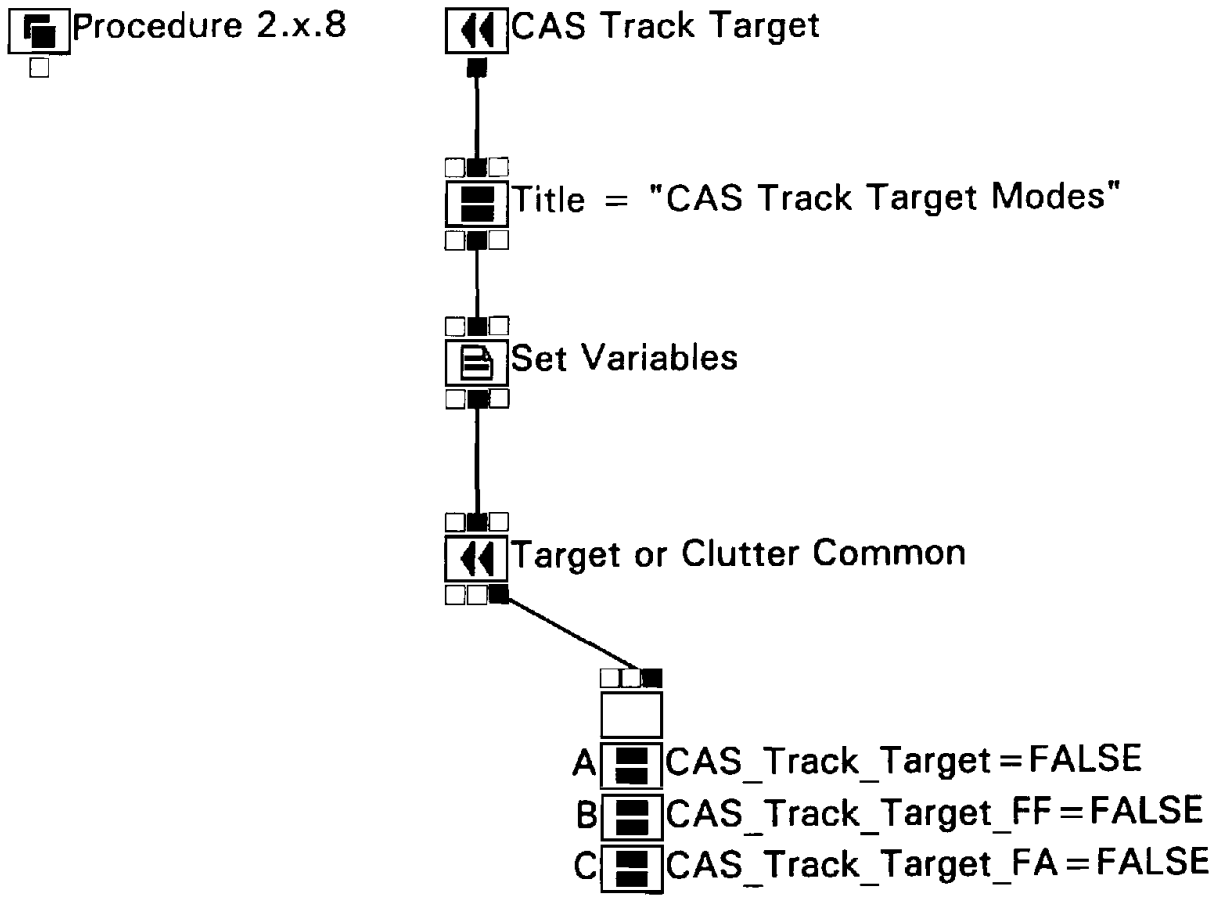
Procedure 2.x.8
CAS Track Target
Title = "CAS Track Target Modes"
Set Variables
Target or Clutter Common
A CAS_Track_Target = FALSE
B CAS_Track_Target_FF = FALSE
C CAS_Track_Target_FA = FALSE

Name:	**CAS TRACK TARGET**
Number:	2.x.8
Description:	This procedure sets variable values to utilize a common procedure shared with CAS Search Clutter, CAS Search Target, CAS Track Clutter, STIR Track Target, and STIR Track Clutter.
Called By:	Cal Paths C, Cal Paths F
Calls:	Target or Clutter Common
Expert Drawing:	There is no corresponding Expert Drawing page number.

CUSTOM NODE SCRIPTS

SET VARIABLES

```
CAS_STIR = "CAS";

Track_Search = "Track";

Target_Clutter = "Target";

Card1 = "412";
Card2 = "A3";
Card3 = "A/05";
Card4 = " ";
Card5 = "AR1";
Card6 = "Z1";
Card7 = "A5";
Card8 = "432";
Card9 = "A/06";
Card10 = " ";

Cable1 = "W3";
Cable2 = "W2";

dB1 = "1.5";
dB2 = "-6.5";
dB3 = "-7 to -4";

TP1 = "15";

Replace = " ";

PN1 = " ";

On_Off1 = "ON";
On_Off2 = "OFF";
```

```
One = "1";
Two = "2";
Three = "3";

SFO1 = "SFO-14-4, SH1";
SFO2 = "SFO-14-2, SH3";
SFO3 = "SFO-13-22, SH1";
SFO4 = " ";

J42 = "J4";
J1 = "J5";
```

THIS PAGE INTENTIONALLY LEFT BLANK

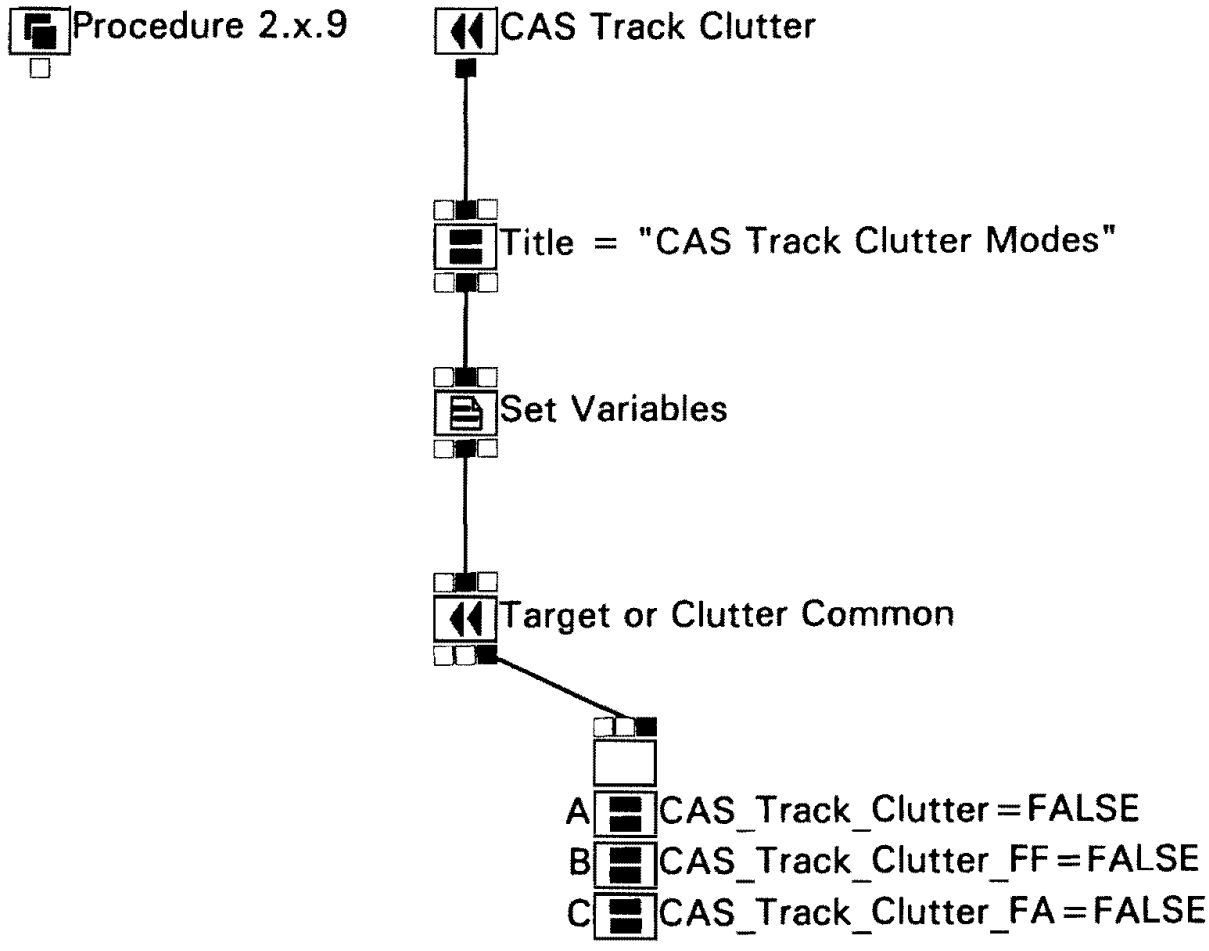
Procedure 2.x.9
CAS Track Clutter
Title = "CAS Track Clutter Modes"
Set Variables
Target or Clutter Common
A CAS_Track_Clutter=FALSE
B CAS_Track_Clutter_FF=FALSE
C CAS_Track_Clutter_FA=FALSE

Name:	**CAS TRACK CLUTTER**
Number:	2.x.9
Description:	This procedure sets variable values to utilize a common procedure shared with CAS Search Clutter, CAS Search Target, CAS Track Target, STIR Track Target, and STIR Track Clutter.
Called By:	Cal Paths D, Cal Paths G
Calls:	Target or Clutter Common
Expert Drawing:	There is no corresponding Expert Drawing page number.

CUSTOM NODE SCRIPTS

SET VARIABLES

```
CAS_STIR = "CAS";

Track_Search = "Track";

Target_Clutter = "Clutter";

Card1 = "412";
Card2 = "A3";
Card3 = "A/05";
Card4 = "A/11 ";
Card5 = "AR1";
Card6 = "Z2";
Card7 = "A5";
Card8 = "432";
Card9 = "A/06";
Card10 = "UD441/A3F1-A/11";

Cable1 = "W5";
Cable2 = "W4";

dB1 = "1.5";
dB2 = "-6.5";
dB3 = "-7 to -4";

TP1 = "17";

Replace = "None";

PN1 = "5381395-1";
On_Off1 = "OFF";
On_Off2 = "ON";

One = "1";
```

```
Two = "2";
Three = "3";

SFO1 = "SFO-14-4, SH2";
SFO2 = "SFO-14-2, SH3";
SFO3 = "SFO-13-25, SH1";
SFO4 = "SFO-13-28, SH1";

J42 = "J4";
J1 = "J3";
```

THIS PAGE INTENTIONALLY LEFT BLANK

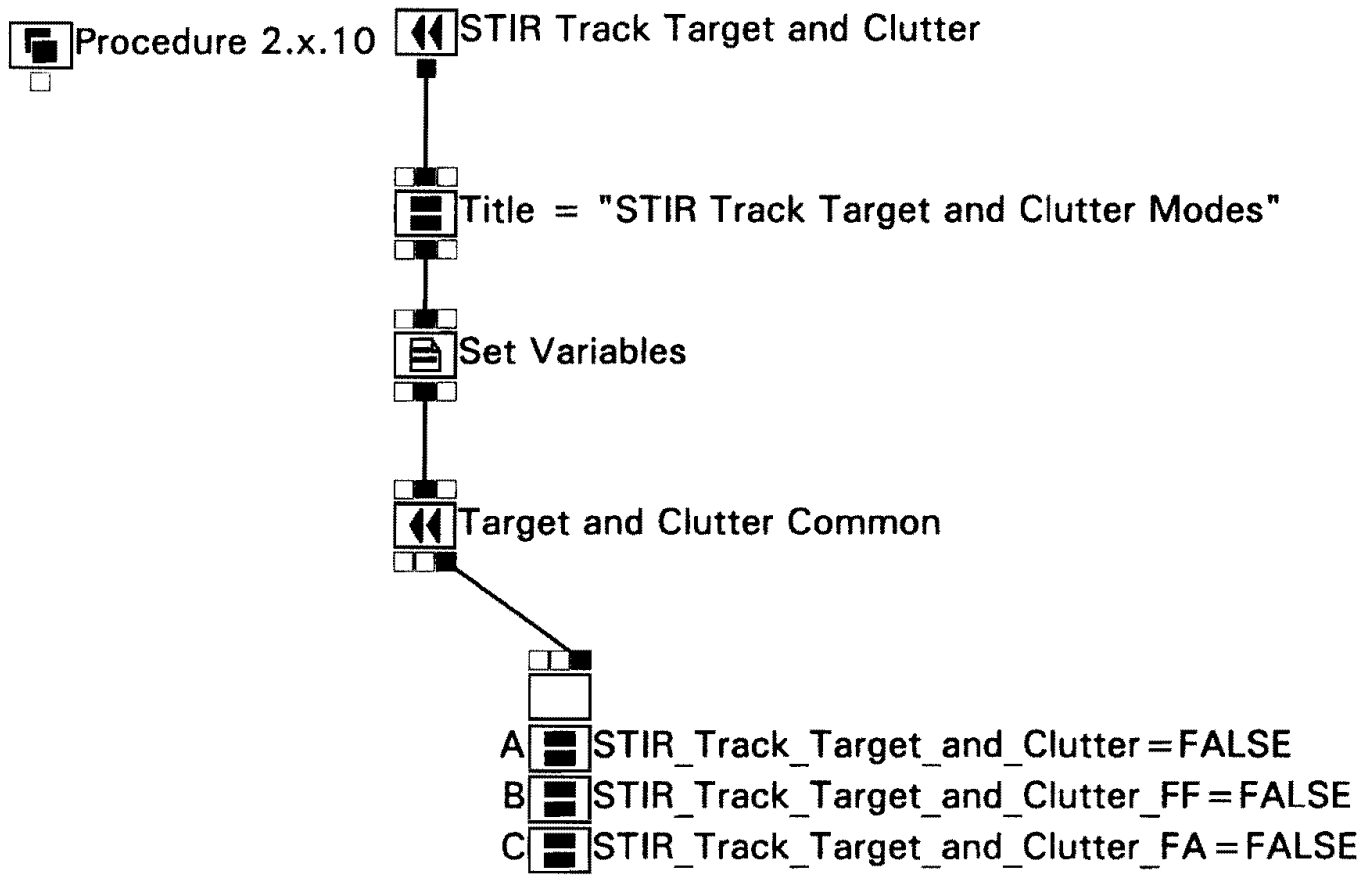
Procedure 2.x.10
STIR Track Target and Clutter
Title = "STIR Track Target and Clutter Modes"
Set Variables
Target and Clutter Common
A STIR_Track_Target_and_Clutter=FALSE
B STIR_Track_Target_and_Clutter_FF=FALSE
C STIR_Track_Target_and_Clutter_FA=FALSE

Name:	**STIR TRACK TARGET AND CLUTTER**
Number:	2.x.10
Description:	This procedure sets variable values to utilize a common procedure shared with CAS Search Target and Clutter and CAS Track Target and Clutter.
Called By:	Cal Paths D, Cal Paths G
Calls:	Target and Clutter Common
Expert Drawing:	There is no corresponding Expert Drawing page number.

CUSTOM NODE SCRIPTS

SET VARIABLES

```
Card1 = "432";
Card2 = "FL1";
Card3 = "A1";
Card4 = "A3";
Card5 = "A1";
Card6 = "AR1";
Card7 = "AR1";
Card8 = "A1";

Cable1 = "P1W12P2";
Cable2 = "P1W18P2":
Cable3 = "P1W10P2";
Cable4 = "A2P13";
Cable5 = "W12";
Cable6 = "W10";
Cable7 = "W18";

dB1 = "-13 to 0";
dB2 = "+5";
dB3 = "-17";
dB4 = "-1";

J1 = "J2";

On_Off1 = "ON";
On_Off2 = "OFF";
```

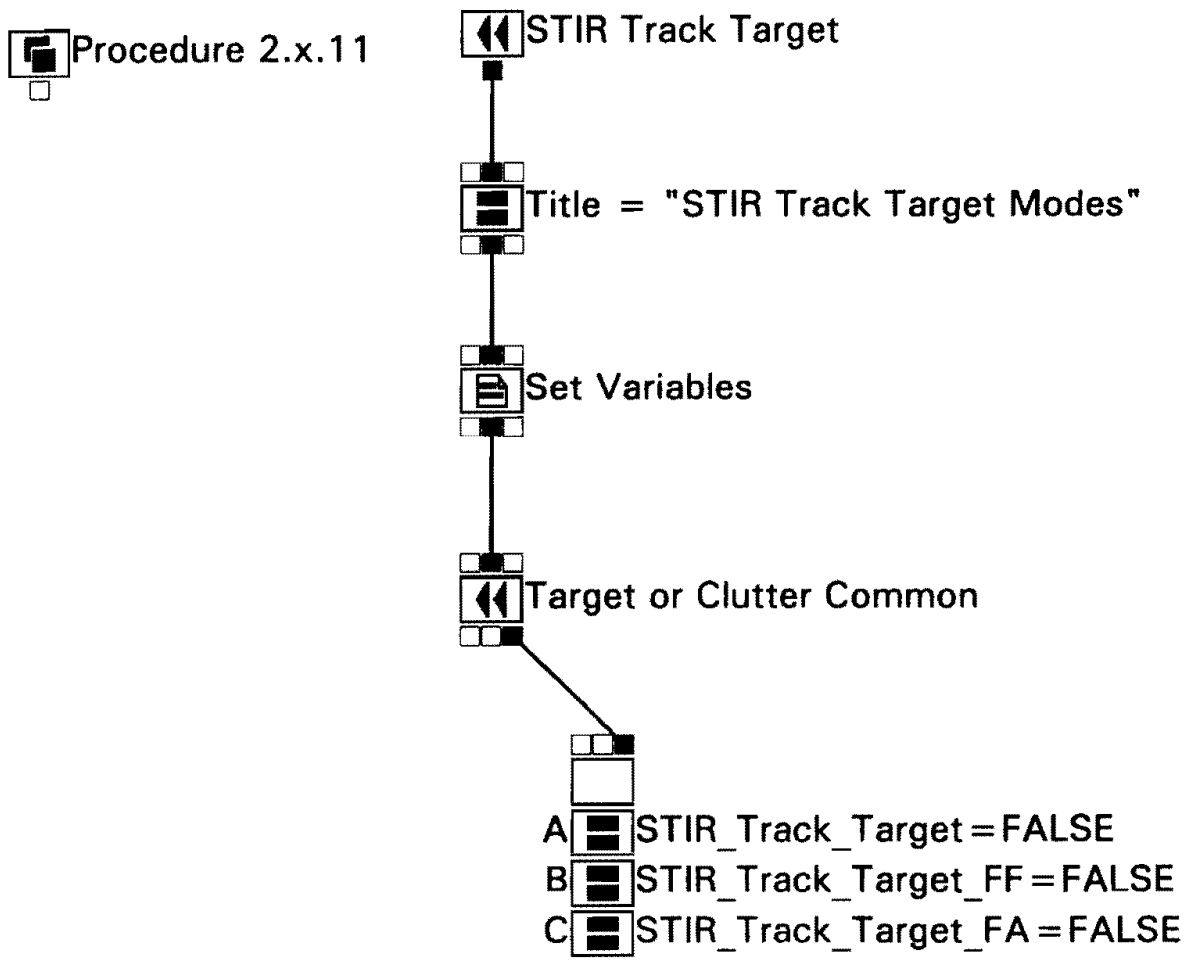
Procedure 2.x.11
STIR Track Target
Title = "STIR Track Target Modes"
Set Variables
Target or Clutter Common
A STIR_Track_Target = FALSE
B STIR_Track_Target_FF = FALSE
C STIR_Track_Target_FA = FALSE

Name:	**STIR TRACK TARGET**
Number:	2.x.11
Description:	This procedure sets variable values to utilize a common procedure shared with CAS Search Clutter, CAS Search Target, CAS Track Clutter, CAS Track Target, and STIR Track Clutter.
Called By:	Cal Paths E, Cal Paths G
Calls:	Target or Clutter Common
Expert Drawing:	There is no corresponding Expert Drawing page number.

CUSTOM NODE SCRIPTS

SET VARIABLES

```
CAS_STIR = "STIR";

Track_Search = "Track";

Target_Clutter = "Target";

Card1 = "432";
Card2 = "A3";
Card3 = "A/06";
Card4 = " ";
Card5 = "AR1";
Card6 = "Z1";
Card7 = "A5";
Card8 = "412";
Card9 = "A/05";
Card10 = " ";

Cable1 = "W3";
Cable2 = "W2";

dB1 = "1.5";
dB2 = "-6.5";
dB3 = "-7 to -4";

TP1 = "15";

Replace = " ";

PN1 = " ";
On_Off1 = "ON";
On_Off2 = "OFF";

One = "1";
```

```
Two = "2";
Three = "3";

SFO1 = "SFO-14-22, SH1";
SFO2 = "SFO-14-20, SH3";
SFO3 = "SFO-13-24, SH1";
SFO4 = " ";

J42 = "J4";
J1 = "J5";
```

THIS PAGE INTENTIONALLY LEFT BLANK

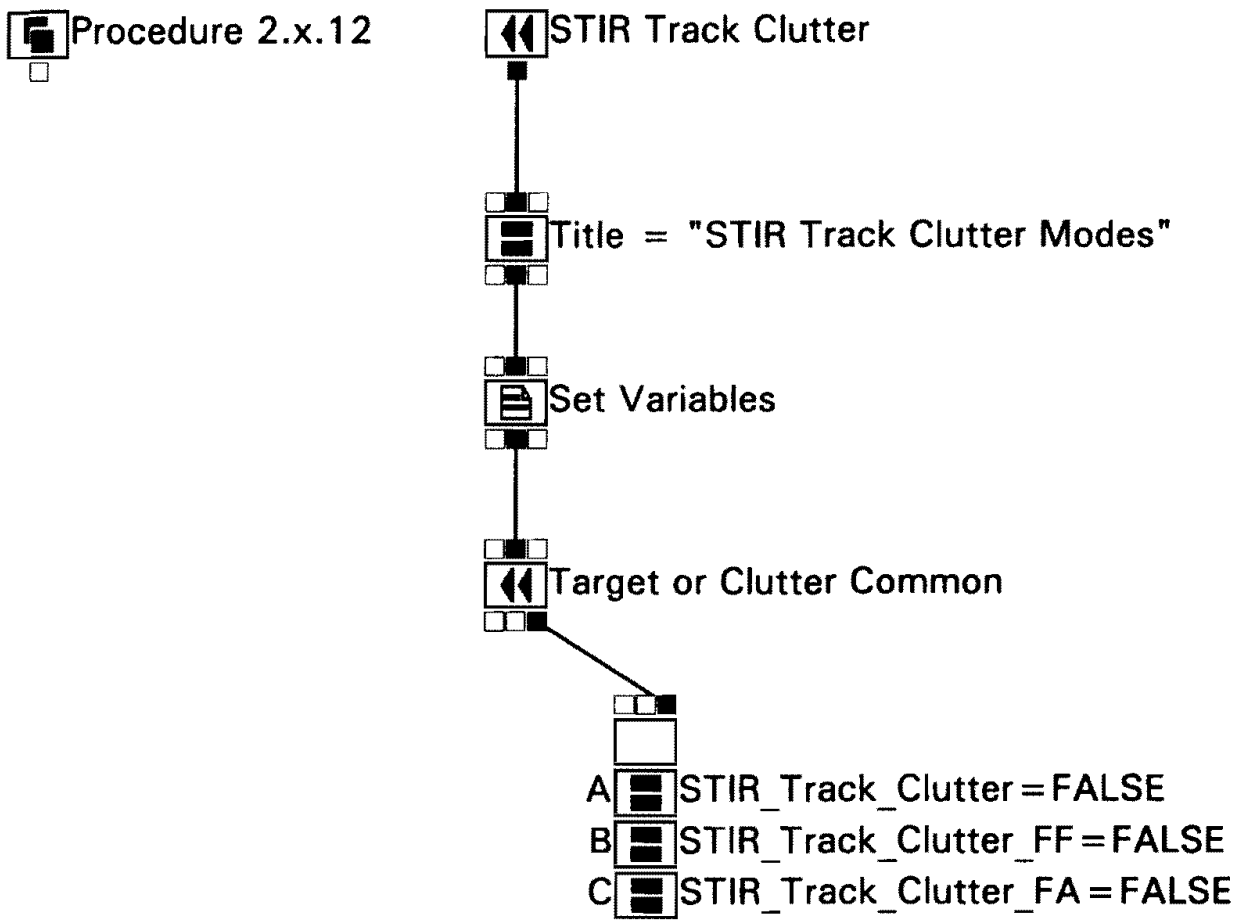
Procedure 2.x.12
STIR Track Clutter
Title = "STIR Track Clutter Modes"
Set Variables
Target or Clutter Common
A STIR_Track_Clutter = FALSE
B STIR_Track_Clutter_FF = FALSE
C STIR_Track_Clutter_FA = FALSE

Name:	STIR TRACK CLUTTER
Number:	2.x.12
Description:	This procedure sets variable values to utilize a common procedure shared with CAS Search Clutter, CAS Search Target, CAS Track Target, CAS Track Target, and STIR Track Target.
Called By:	Cal Paths E, Cal Paths G
Calls:	Target or Clutter Common
Expert Drawing:	There is no corresponding Expert Drawing page number.

CUSTOM NODE SCRIPTS

SET VARIABLES

```
CAS_STIR = "STIR";

Track_Search = "Track";

Target_Clutter = "Clutter";

Card1 = "432";
Card2 = "A3";
Card3 = "A/06";
Card4 = "A/11 ";
Card5 = "AR1";
Card6 = "Z2";
Card7 = "A5";
Card8 = "412";
Card9 = "A/05";
Card10 = "UD441/A3F1-A/11";

Cable1 = "W5";
Cable2 = "W4";

dB1 = "1.5";
dB2 = "-6.5";
dB3 = "-7 to -4";

TP1 = "17";

Replace = "None";

PN1 = "5391395-1";
On_Off1 = "OFF";
On_Off2 = "ON";

One = "1";
```

```
Two = "2";
Three = "3";

SFO1 = "SFO-14-22, SH2";
SFO2 = "SFO-14-20, SH3";
SFO3 = "SFO-13-24, SH1";
SFO4 = "SFO-13-28, SH2";

J42 = "J2";
J1 = "J4";
```

THIS PAGE INTENTIONALLY LEFT BLANK

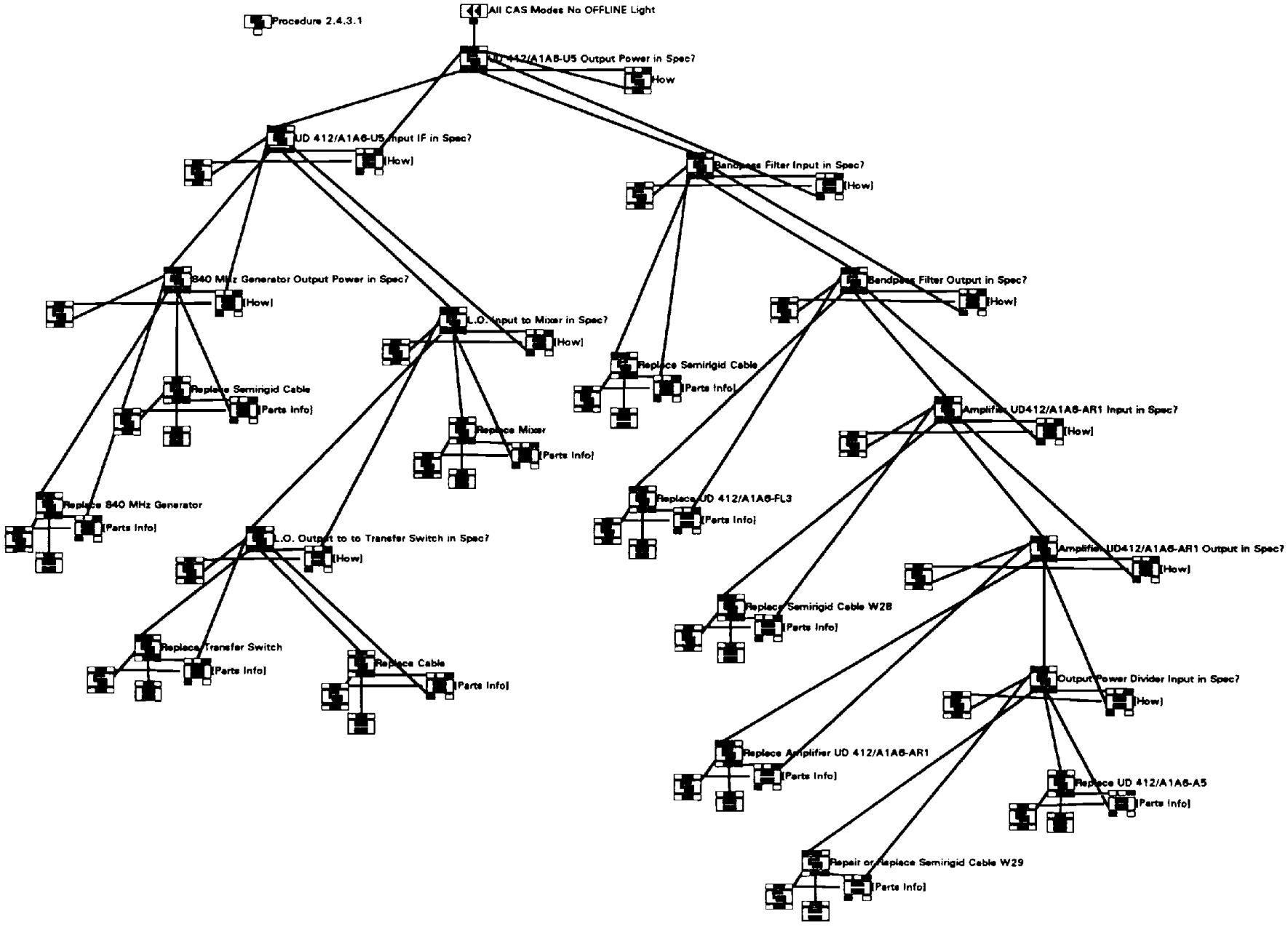
Procedure 2.4.3.1
All CAS Modes No OFFLINE Light
UD 412/A1A6-U5 Output Power in Spec?
How
UD 412/A1A6-U5 Input IF in Spec?
[How]
Bandpass Filter Input in Spec?
[How]
840 MHz Generator Output Power in Spec?
[How]
L.O. Input to Mixer in Spec?
[How]
Bandpass Filter Output in Spec?
[How]
Replace Semirigid Cable
[Parts Info]
Replace Mixer
[Parts Info]
Replace Semirigid Cable
[Parts Info]
Amplifier UD412/A1A6-AR1 Input in Spec?
[How]
Replace 840 MHz Generator
[Parts Info]
Replace UD 412/A1A6-FL3
[Parts Info]
L.O. Output to to Transfer Switch in Spec?
[How]
Amplifier UD412/A1A6-AR1 Output in Spec?
[How]
Replace Transfer Switch
[Parts Info]
Replace Cable
[Parts Info]
Replace Semirigid Cable W28
[Parts Info]
Output Power Divider Input in Spec?
[How]
Replace Amplifier UD 412/A1A6-AR1
[Parts Info]
Replace UD 412/A1A6-A5
[Parts Info]
Repair or Replace Semirigid Cable W29
[Parts Info]

Name:	**ALL CAS MODES NO OFFLINE LIGHT**
Number:	2.4.3.1
Description:	This procedure is a path element procedure of the path procedure All CAS Modes. It does not utilize any of the variable values set in All CAS Modes. It is only accessed through the path procedure.
Called By:	All CAS Modes
Calls:	None
Expert Drawing:	This procedure corresponds to parts of Expert Drawing pages SH2B and SH2B.1.

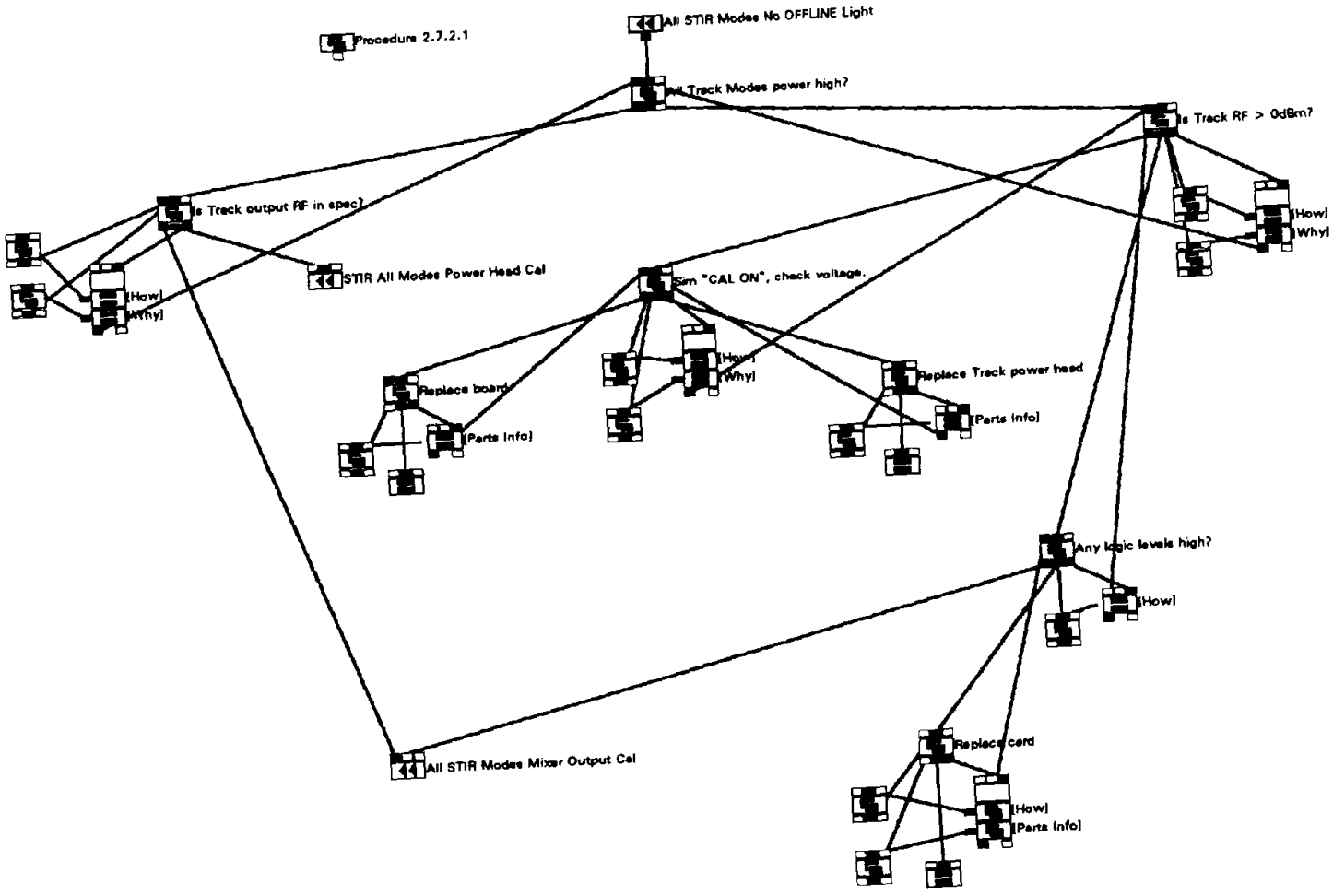
Procedure 2.7.2.1
All STIR Modes No OFFLINE Light
All Track Modes power high?
Is Track RF > 0dBm?
Is Track output RF in spec?
[How]
[Why]
STIR All Modes Power Head Cal
Sim "CAL ON", check voltage.
[How]
[Why]
Replace board
[Parts Info]
Replace Track power head
[Parts Info]
Any logic levels high?
[How]
Replace card
[How]
[Parts Info]
All STIR Modes Mixer Output Cal

Name:	**ALL STIR MODES NO OFFLINE LIGHT**
Number:	2.7.2.1
Description:	This procedure is a path element procedure of the path procedure All STIR Modes. It does not utilize any of the variable values set in All STIR Modes. It is only accessed through the path procedure.
Called By:	All STIR Modes
Calls:	All STIR Modes Power Head Cal, All STIR Modes Mixer Output Cal
Expert Drawing:	This procedure corresponds to parts of Expert Drawing pages SH3B and SH3B.1.

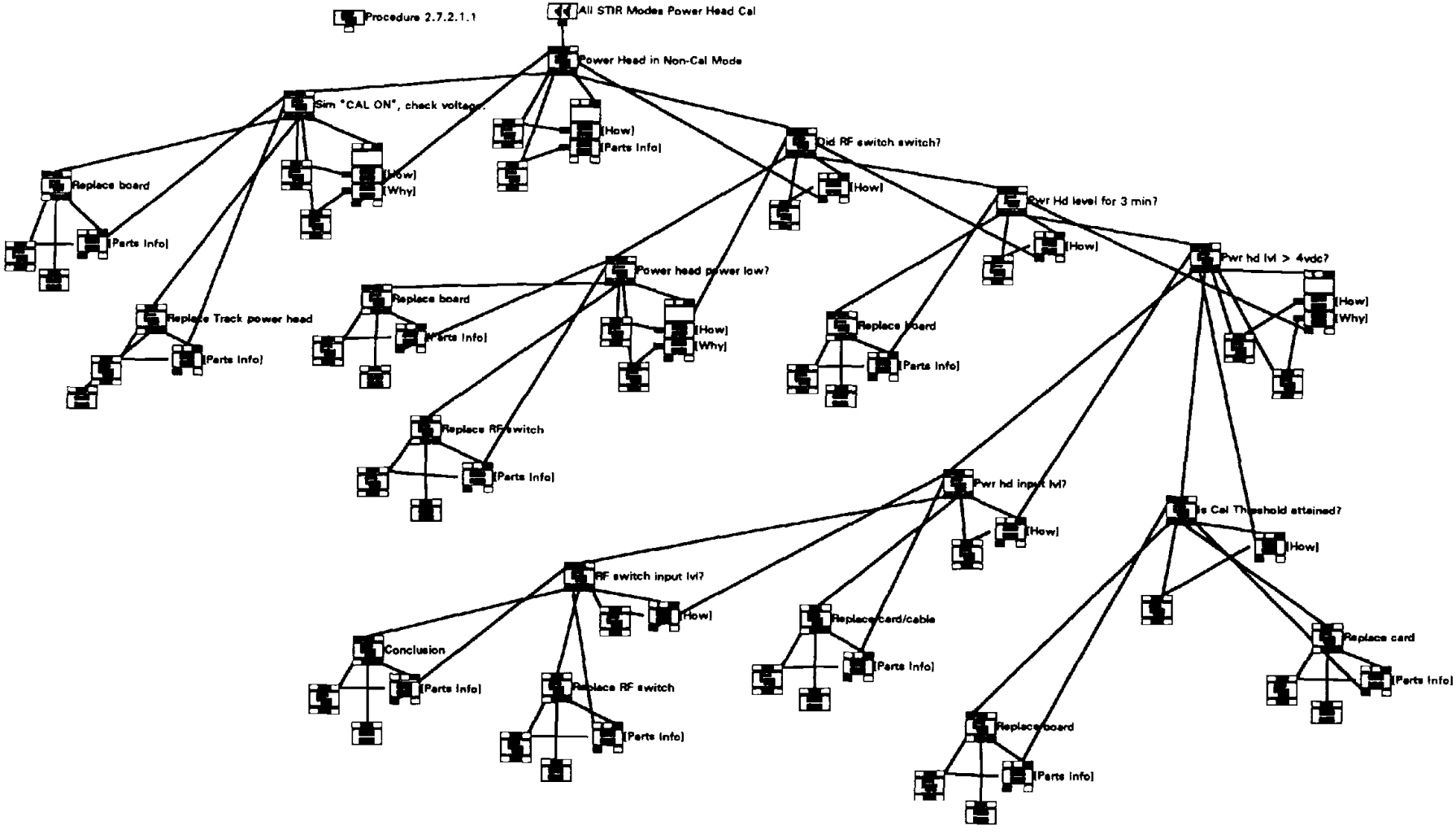
Procedure 2.7.2.1.1
All STIR Modes Power Head Cal
Power Head in Non-Cal Mode
Sim "CAL ON", check voltage
[How]
[Parts Info]
Did RF switch switch?
[How]
Pwr Hd level for 3 min?
[How]
Pwr hd lvl > 4vdc?
[How]
[Why]
Replace board
[Parts Info]
[How]
[Why]
Power head power low?
Replace board
[Parts Info]
[How]
[Why]
Replace board
[Parts Info]
Replace Track power head
[Parts Info]
Replace RF switch
[Parts Info]
Pwr hd input lvl?
[How]
Is Cal Threshold attained?
[How]
RF switch input lvl?
[How]
Replace card/cable
[Parts Info]
Replace card
[Parts Info]
Conclusion
[Parts Info]
Replace RF switch
[Parts Info]
Replace board
[Parts Info]

Name:	**ALL STIR MODES POWER HEAD CAL**
Number:	2.7.2.1.1
Description:	This procedure is a path sub-element procedure of and accessed only through the path element procedure All STIR Modes No OFFLINE Light.
Called By:	All STIR Modes No OFFLINE Light
Calls:	None
Expert Drawing:	This procedure corresponds to parts of Expert Drawing page SH3B.3.

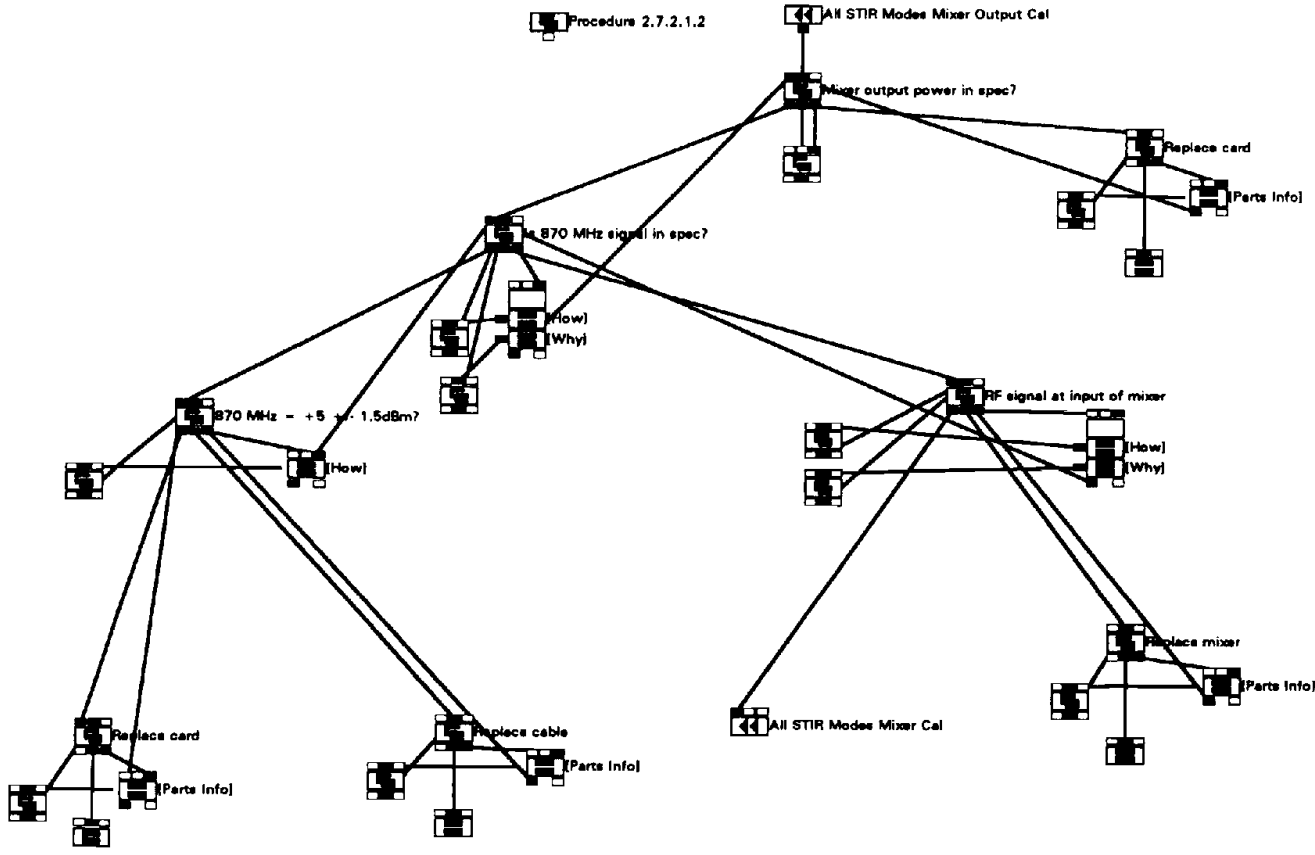
Procedure 2.7.2.1.2
All STIR Modes Mixer Output Cal
Mixer output power in spec?
Replace card
[Parts Info]
is 870 MHz signal in spec?
[How]
[Why]
870 MHz - +5 +/- 1.5dBm?
[How]
RF signal at input of mixer
[How]
[Why]
Replace mixer
[Parts Info]
All STIR Modes Mixer Cal
Replace card
[Parts Info]
Replace cable
[Parts Info]

Name:	**ALL STIR MODES MIXER OUTPUT CAL**
Number:	2.7.2.1.2
Description:	This procedure is a path sub-element procedure of and accessed only through the path element procedure All STIR Modes No OFFLINE Light.
Called By:	All STIR Modes No OFFLINE Light
Calls:	All STIR Modes Mixer Cal
Expert Drawing:	This procedure corresponds to parts of Expert Drawing page SH3B.2.

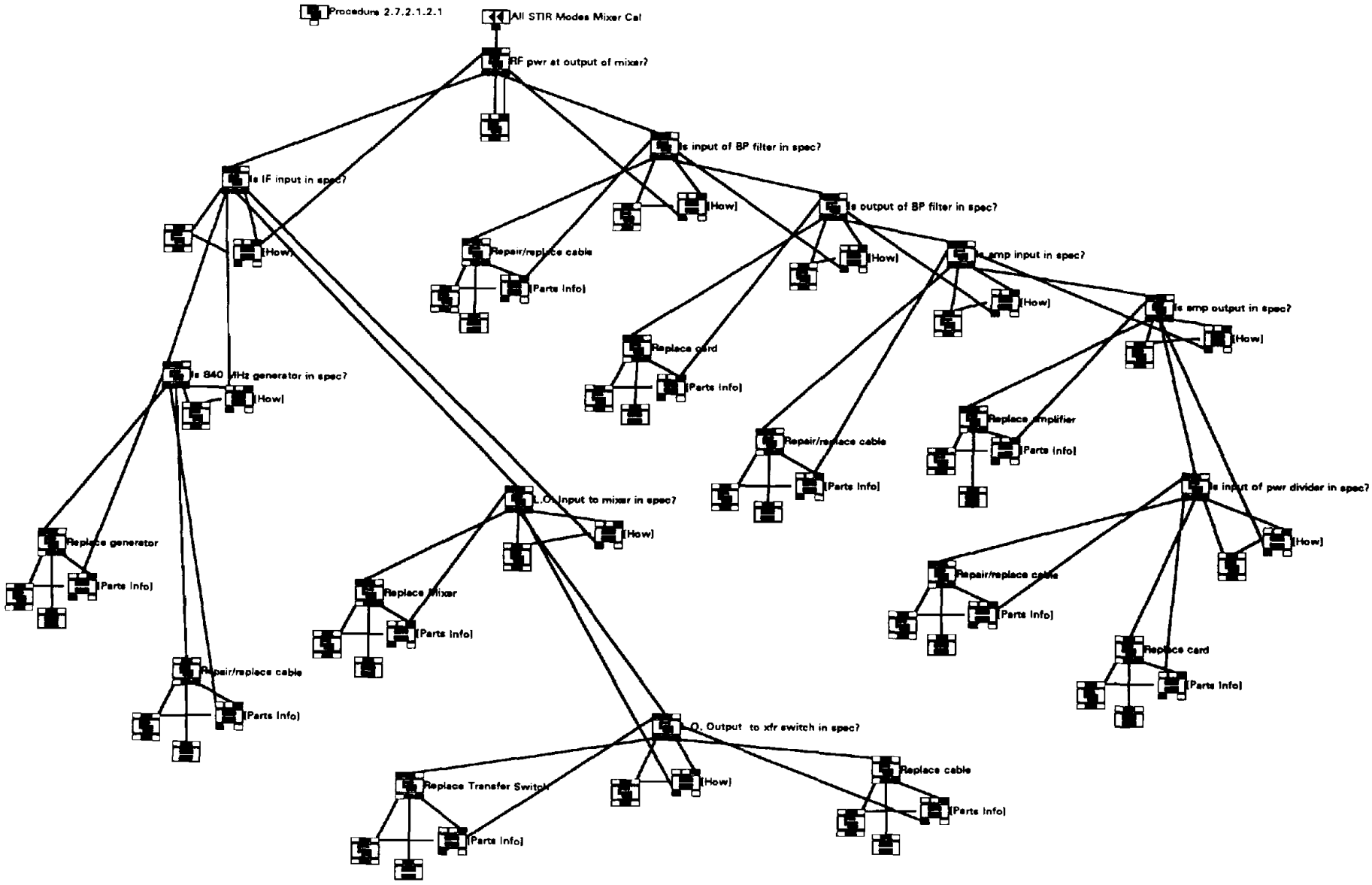
Procedure 2.7.2.1.2.1
All STIR Modes Mixer Cal
RF pwr at output of mixer?
Is IF input in spec?
Is input of BP filter in spec?
Is output of BP filter in spec?
Is amp input in spec?
Is amp output in spec?
Is 840 MHz generator in spec?
L.O. input to mixer in spec?
Is input of pwr divider in spec?
L.O. Output to xfr switch in spec?
[How]
Repair/replace cable
[Parts Info]
Replace card
Replace amplifier
Replace generator
Replace Mixer
Replace Transfer Switch
Replace cable

Name:	**ALL STIR MODES MIXER CAL**
Number:	2.7.2.1.2.1
Description:	This procedure is a path sub-sub-element procedure of and accessed only through the path sub-element procedure All STIR Modes Mixer Output Cal.
Called By:	All STIR Modes Mixer Output Cal
Calls:	None
Expert Drawing:	This procedure corresponds to Expert Drawing page SH3B.4.

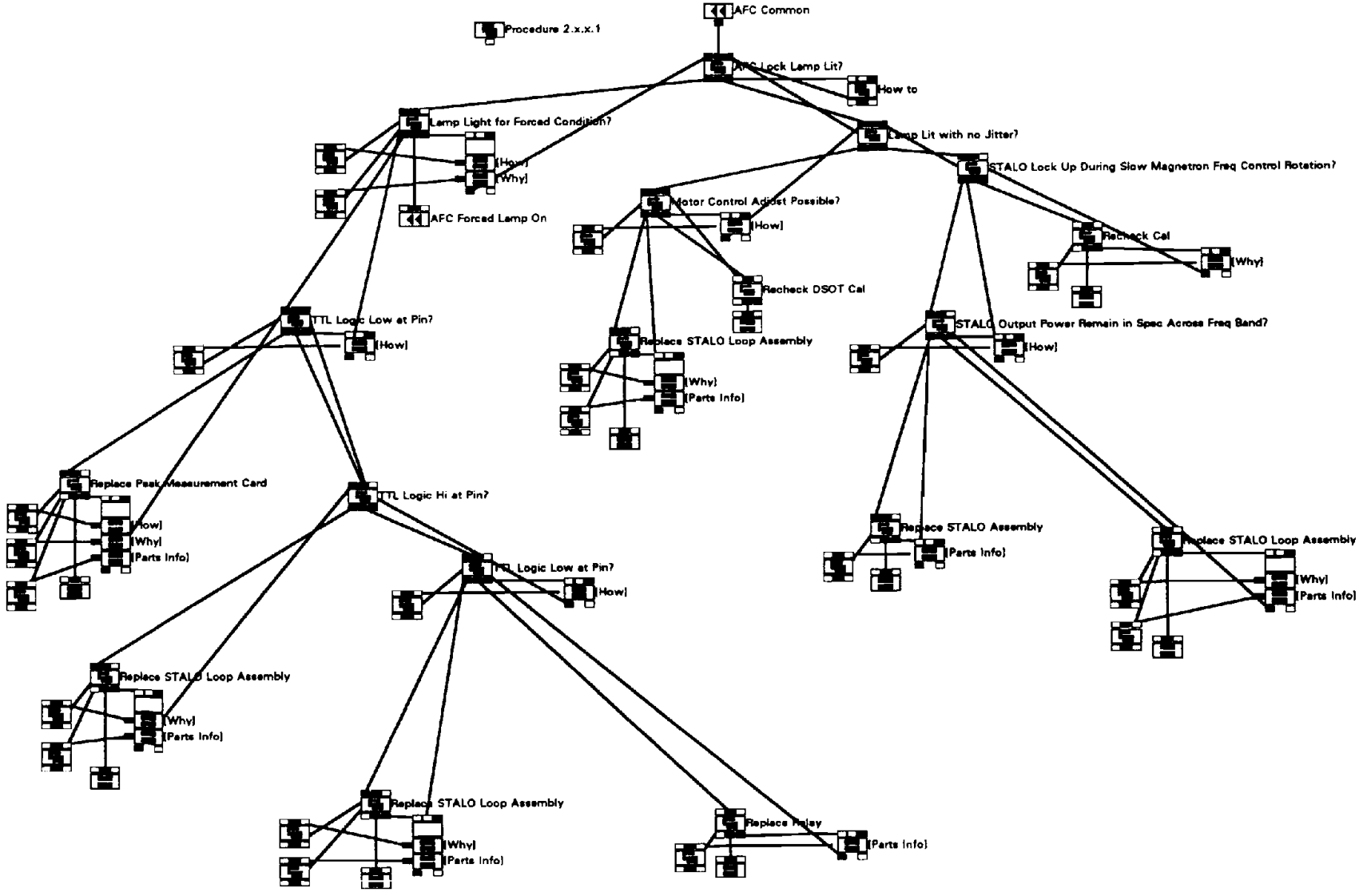
AFC Common
Procedure 2.x.x.1
AFC Lock Lamp Lit?
How to
Lamp Light for Forced Condition?
[How]
[Why]
AFC Forced Lamp On
Lamp Lit with no Jitter?
STALO Lock Up During Slow Magnetron Freq Control Rotation?
Motor Control Adjust Possible?
[How]
Recheck DSOT Cal
Recheck Cal
[Why]
TTL Logic Low at Pin?
[How]
Replace STALO Loop Assembly
[Why]
[Parts Info]
STALO Output Power Remain in Spec Across Freq Band?
[How]
Replace Peak Measurement Card
[How]
[Why]
[Parts Info]
TTL Logic Hi at Pin?
Replace STALO Assembly
[Parts Info]
Replace STALO Loop Assembly
[Why]
[Parts Info]
TTL Logic Low at Pin?
[How]
Replace STALO Loop Assembly
[Why]
[Parts Info]
Replace STALO Loop Assembly
[Why]
[Parts Info]
Replace Relay
[Parts Info]

Name:	**AFC COMMON**
Number:	2.x.x.1
Description:	This procedure is common to the troubleshooting paths, CAS AFC and STIR AFC. It utilizes variable values set in the calling procedures to customize the procedure for either CAS or STIR.
Called By:	CAS AFC, STIR AFC
Calls:	AFC Common AFC Forced Lamp On
Expert Drawing:	This procedure corresponds to the Expert Drawings on pages SH2A and SH3A.

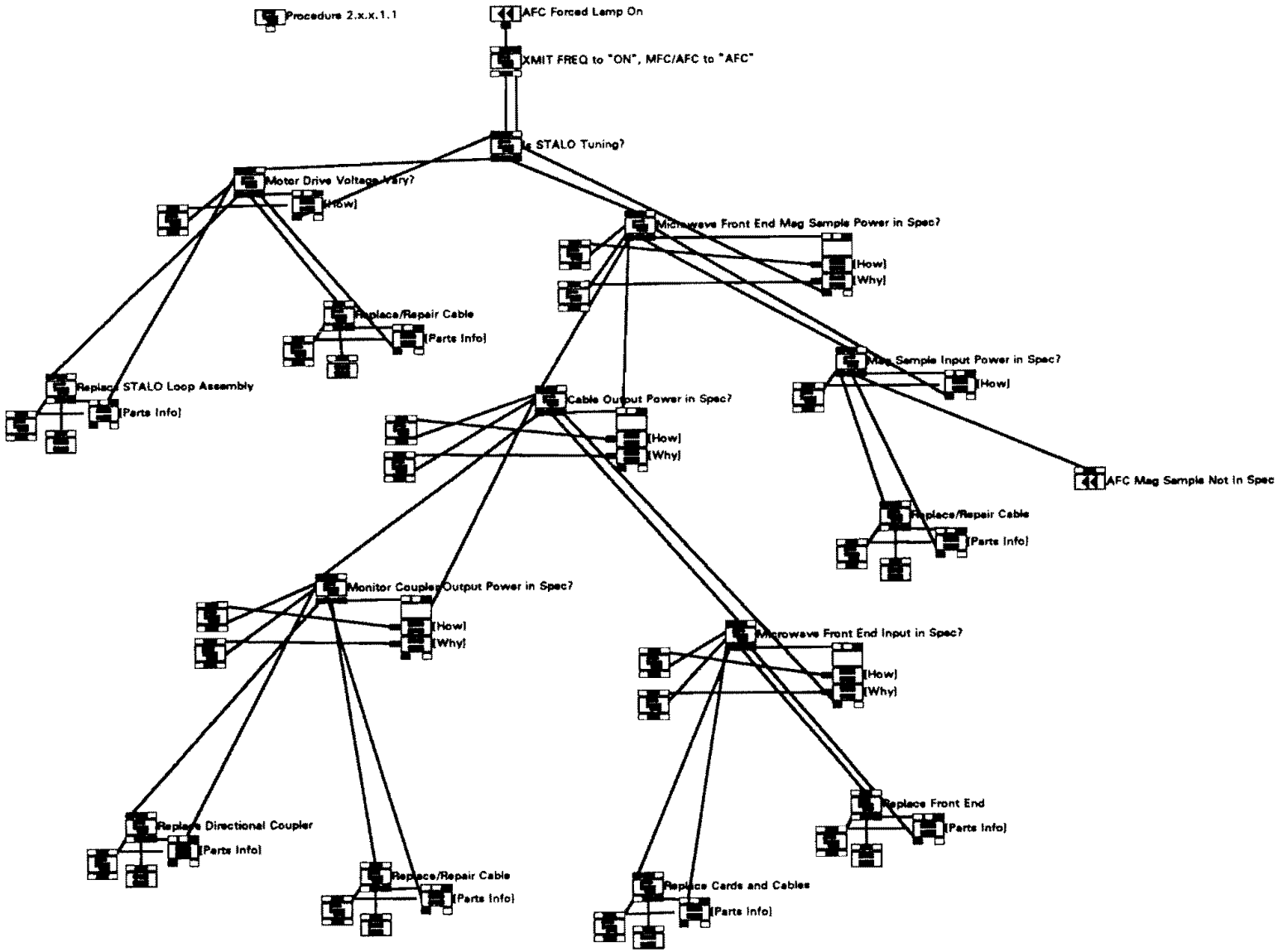
Procedure 2.x.x.1.1
AFC Forced Lamp On
XMIT FREQ to "ON", MFC/AFC to "AFC"
Is STALO Tuning?
Motor Drive Voltage Vary?
[How]
Microwave Front End Mag Sample Power in Spec?
[How]
[Why]
Replace/Repair Cable
[Parts Info]
Mag Sample Input Power in Spec?
[How]
Replace STALO Loop Assembly
[Parts Info]
Cable Output Power in Spec?
[How]
[Why]
AFC Mag Sample Not In Spec
Replace/Repair Cable
[Parts Info]
Monitor Coupler Output Power in Spec?
[How]
[Why]
Microwave Front End Input in Spec?
[How]
[Why]
Replace Directional Coupler
[Parts Info]
Replace/Repair Cable
[Parts Info]
Replace Front End
[Parts Info]
Replace Cards and Cables
[Parts Info]

Name:	**AFC FORCED LAMP ON**
Number:	2.x.x.1.1
Description:	This procedure is a common element procedure that is part of a common troubleshooting path. It utilizes variable values set in the procedures CAS AFC and STIR AFC to customize the procedure for either CAS or STIR.
Called By:	AFC Common
Calls:	AFC Mag Sample Not In Spec
Expert Drawing:	This procedure corresponds to Expert Drawings on pages SH2A.1 and SH3A.1.

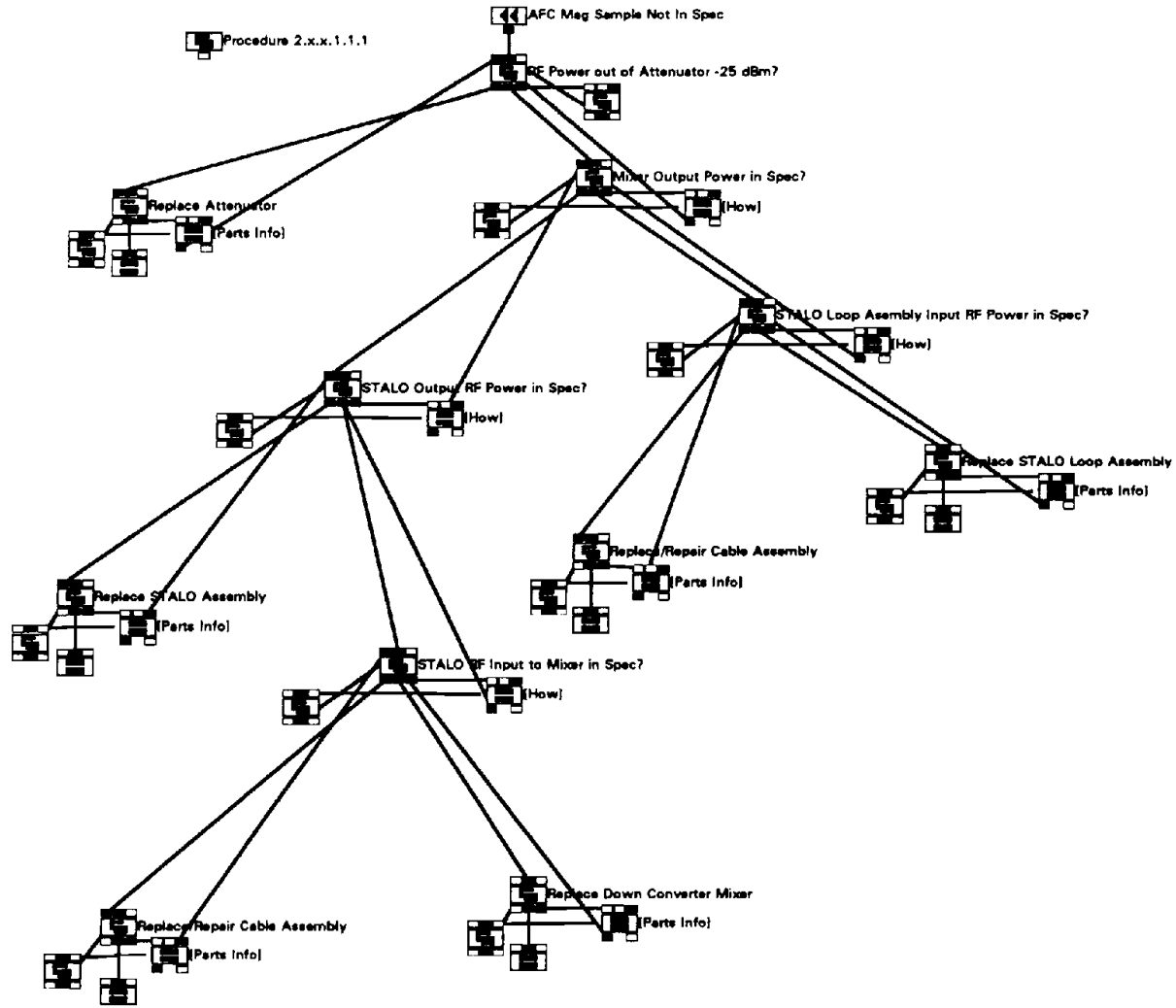
AFC Mag Sample Not In Spec
Procedure 2.x.x.1.1.1
RF Power out of Attenuator -25 dBm?
Mixer Output Power in Spec?
Replace Attenuator
[Parts Info]
[How]
STALO Loop Assembly Input RF Power in Spec?
[How]
STALO Output RF Power in Spec?
[How]
Replace STALO Loop Assembly
[Parts Info]
Replace/Repair Cable Assembly
[Parts Info]
Replace STALO Assembly
[Parts Info]
STALO RF Input to Mixer in Spec?
[How]
Replace Down Converter Mixer
[Parts Info]
Replace/Repair Cable Assembly
[Parts Info]

Name:	**AFC MAG SAMPLE NOT IN SPEC**
Number:	2.x.x.1.1.1
Description:	This procedure is a common sub-element procedure that is part of a common troubleshooting path. It utilizes variable values set in the procedures CAS AFC and STIR AFC to customize the procedure for either CAS or STIR.
Called By:	AFC Common Forced Lamp On
Calls:	None
Expert Drawing:	This procedure corresponds to Expert Drawings on pages SH2A.1, SH2A.2, SH3A.1 and SH3A.2.

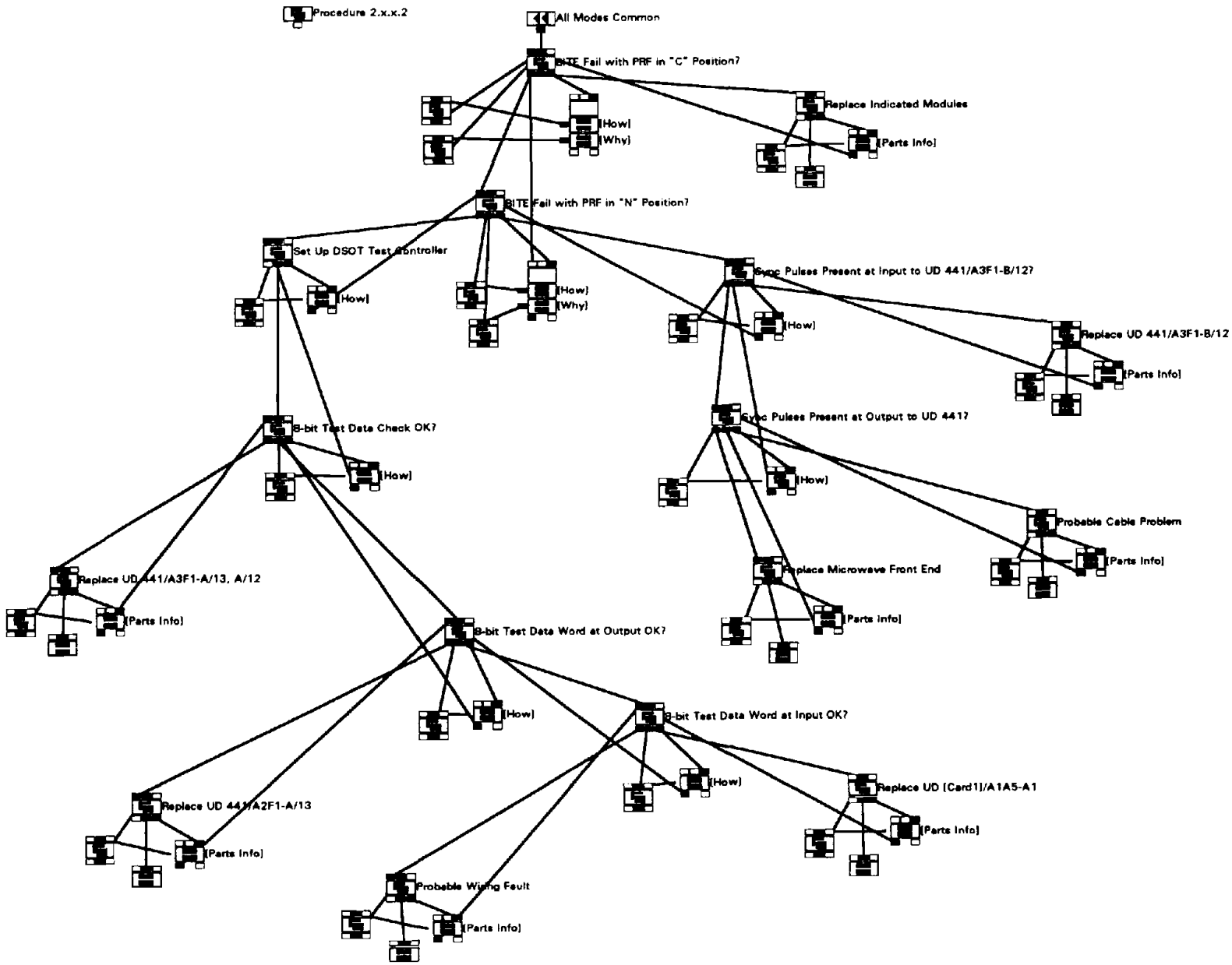
Procedure 2.x.x.2
All Modes Common
BITE Fail with PRF in "C" Position?
[How]
[Why]
Replace Indicated Modules
[Parts Info]
BITE Fail with PRF in "N" Position?
Set Up DSOT Test Controller
[How]
[How]
[Why]
Sync Pulses Present at Input to UD 441/A3F1-B/12?
[How]
Replace UD 441/A3F1-B/12
[Parts Info]
8-bit Test Data Check OK?
[How]
Sync Pulses Present at Output to UD 441?
[How]
Probable Cable Problem
[Parts Info]
Replace UD 441/A3F1-A/13, A/12
[Parts Info]
Replace Microwave Front End
[Parts Info]
8-bit Test Data Word at Output OK?
[How]
8-bit Test Data Word at Input OK?
[How]
Replace UD [Card1]/A1A5-A1
[Parts Info]
Replace UD 441/A2F1-A/13
[Parts Info]
Probable Wiring Fault
[Parts Info]

Name:	**ALL MODES COMMON**
Number:	2.x.x.2
Description:	This procedure is common to the troubleshooting paths, All CAS Modes and a portion of ALL STIR Modes. It utilizes variable values set in the calling procedures to customize the procedure for either CAS or STIR.
Called By:	All CAS Modes, All STIR Modes
Calls:	None
Expert Drawing:	This procedure when called by All CAS Modes corresponds to Expert Drawings on pages SH2B and SH2B.1. When called by All STIR Modes it corresponds to Expert Drawings on pages SH3B and SH3B.1.

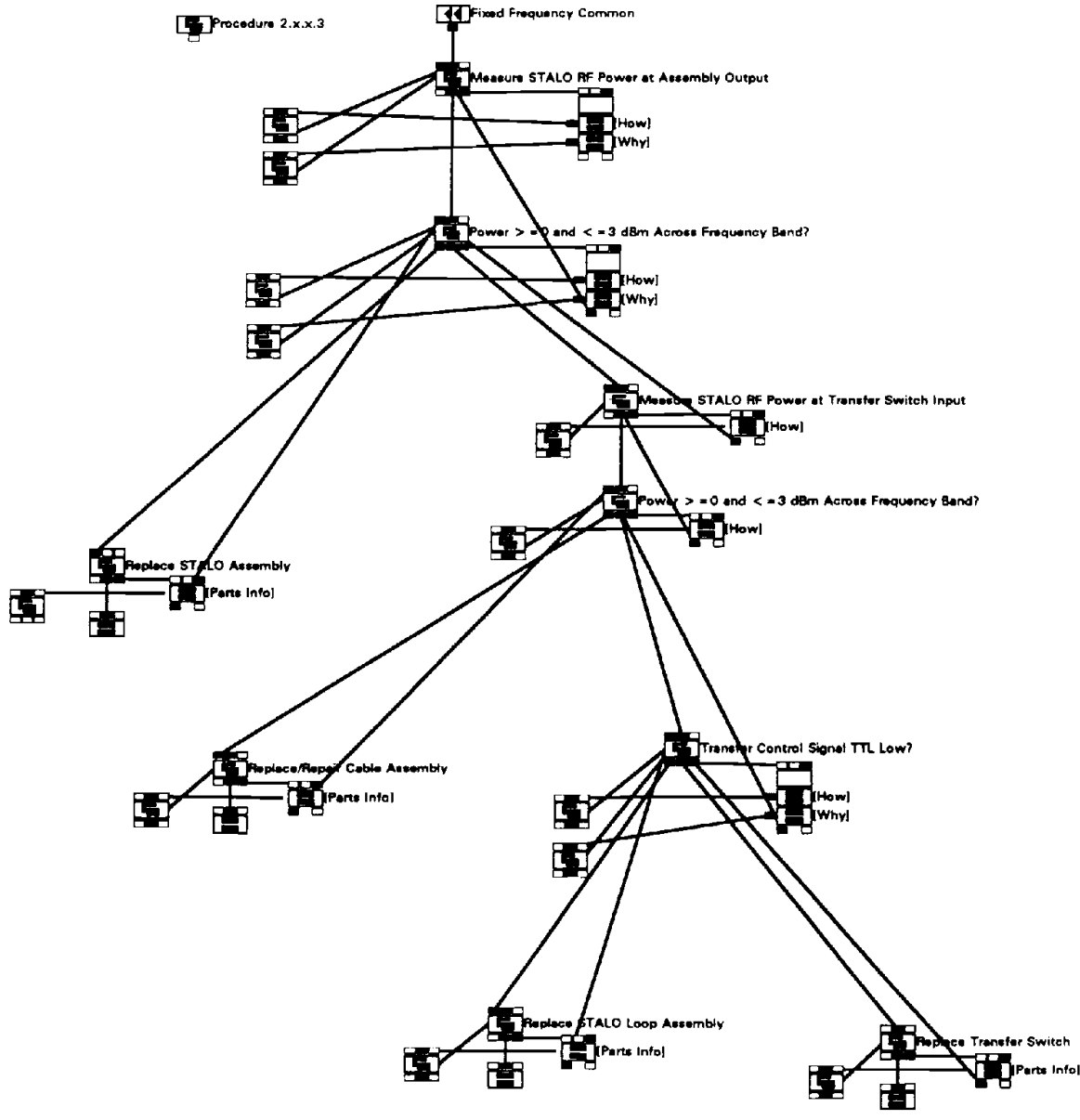
Procedure 2.x.x.3
Fixed Frequency Common
Measure STALO RF Power at Assembly Output
[How]
[Why]
Power > =0 and < =3 dBm Across Frequency Band?
[How]
[Why]
Measure STALO RF Power at Transfer Switch Input
[How]
Power > =0 and < =3 dBm Across Frequency Band?
[How]
Replace STALO Assembly
[Parts Info]
Replace/Repair Cable Assembly
[Parts Info]
Transfer Control Signal TTL Low?
[How]
[Why]
Replace STALO Loop Assembly
[Parts Info]
Replace Transfer Switch
[Parts Info]

Name:	**FIXED FREQUENCY COMMON**
Number:	2.x.x.3
Description:	This procedure is common to the troubleshooting paths, CAS Fixed Frequency and STIR Fixed Frequency. It utilizes variable values set in the calling procedures to customize the procedure for either CAS or STIR.
Called By:	CAS Fixed Frequency, STIR Fixed Frequency
Calls:	None
Expert Drawing:	This procedure when called by CAS Fixed Frequency corresponds to the Expert Drawing on page SH2C. When called by STIR Fixed Frequency it corresponds to Expert Drawing on page SH3C.

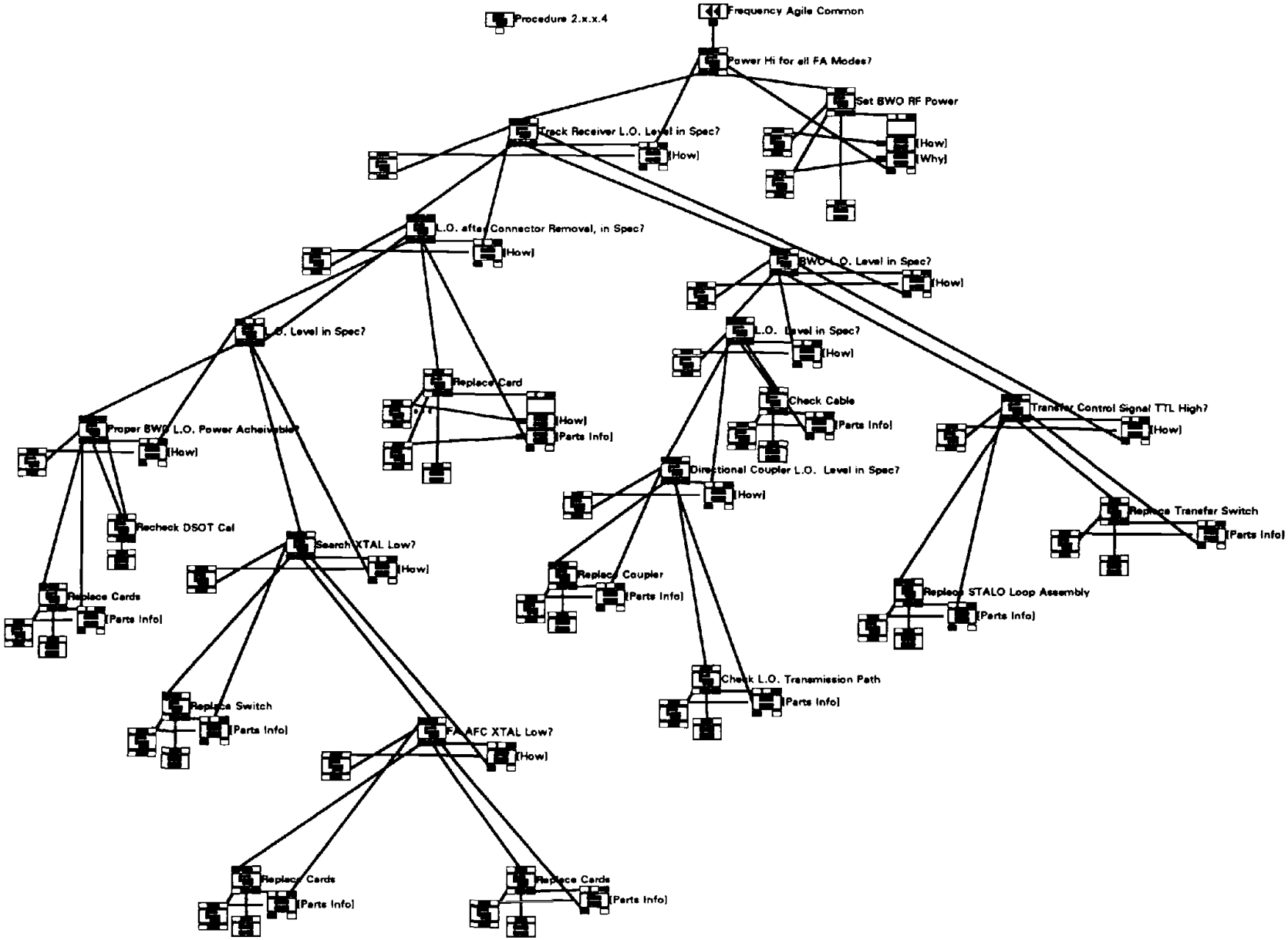
Procedure 2.x.x.4
Frequency Agile Common
Power Hi for all FA Modes?
Set BWO RF Power
[How]
[Why]
Track Receiver L.O. Level in Spec?
[How]
L.O. after Connector Removal, in Spec?
[How]
BWO L.O. Level in Spec?
[How]
L.O. Level in Spec?
[How]
Replace Card
[How]
[Parts Info]
Proper BWO L.O. Power Acheivable?
[How]
Check Cable
[Parts Info]
Transfer Control Signal TTL High?
[How]
Directional Coupler L.O. Level in Spec?
[How]
Recheck DSOT Cal
Search XTAL Low?
[How]
Replace Tranefer Switch
[Parts Info]
Replace Coupler
[Parts Info]
Replace Cards
[Parts Info]
Replace STALO Loop Assembly
[Parts Info]
Check L.O. Transmission Path
[Parts Info]
Replace Switch
[Parts Info]
FA AFC XTAL Low?
[How]
Replace Cards
[Parts Info]
Replace Cards
[Parts Info]

Name:	**FREQUENCY AGILE COMMON**
Number:	2.x.x.4
Description:	This procedure is common to the troubleshooting paths, CAS Frequency Agile and STIR Frequency Agile. It utilizes variable values set in the calling procedures to customize the procedure for either CAS or STIR.
Called By:	CAS Frequency Agile, STIR Frequency Agile
Calls:	None
Expert Drawing:	This procedure when called by CAS Frequency Agile corresponds to the Expert Drawing on page SH2D. When called by STIR Frequency Agile, it corresponds to Expert Drawing on page SH3D.

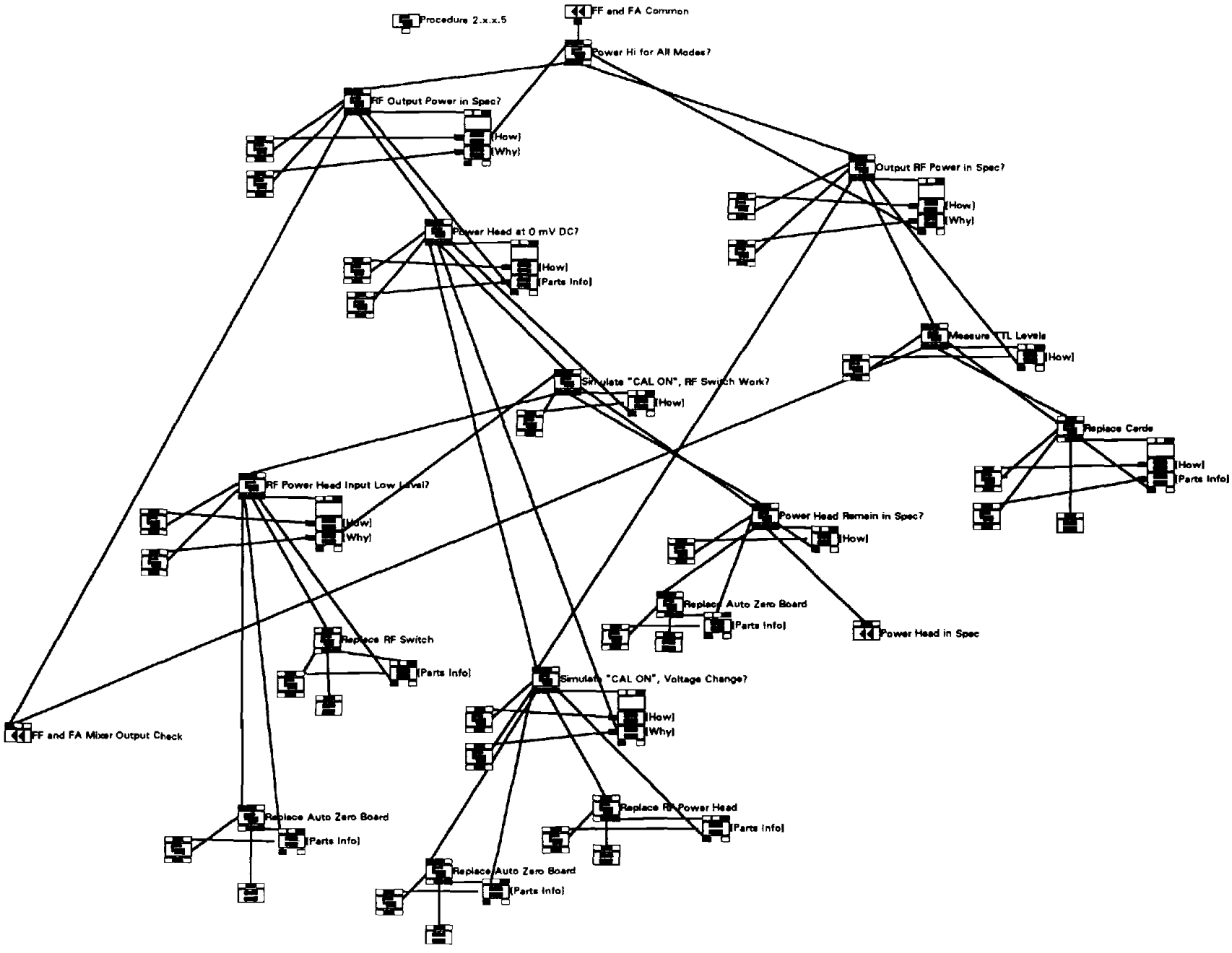
Procedure 2.x.x.5
FF and FA Common
Power Hi for All Modes?
RF Output Power in Spec?
[How]
[Why]
Output RF Power in Spec?
[How]
[Why]
Power Head at 0 mV DC?
[How]
[Parts Info]
Measure TTL Levels
[How]
Simulate "CAL ON", RF Switch Work?
[How]
Replace Cards
[How]
[Parts Info]
RF Power Head Input Low Level?
[How]
[Why]
Power Head Remain in Spec?
[How]
Replace Auto Zero Board
[Parts Info]
Power Head in Spec
Replace RF Switch
[Parts Info]
Simulate "CAL ON", Voltage Change?
[How]
[Why]
FF and FA Mixer Output Check
Replace Auto Zero Board
[Parts Info]
Replace RF Power Head
[Parts Info]
Replace Auto Zero Board
[Parts Info]

Name:	**FF AND FA COMMON**
Number:	2.x.x.5
Description:	This procedure is common to the troubleshooting paths, All CAS Search and All CAS Track. It utilizes variable values set in the calling procedures to customize the procedure for either CAS Search or CAS Track.
Called By:	All CAS Search, All CAS Track
Calls:	FF and FA Mixer Output Check, FF and FA Power Head In Spec
Expert Drawing:	This procedure when called by All CAS Search corresponds to the Expert Drawing on page SH2M. When called by All CAS Track, it corresponds to the Expert Drawing on page SH2F.

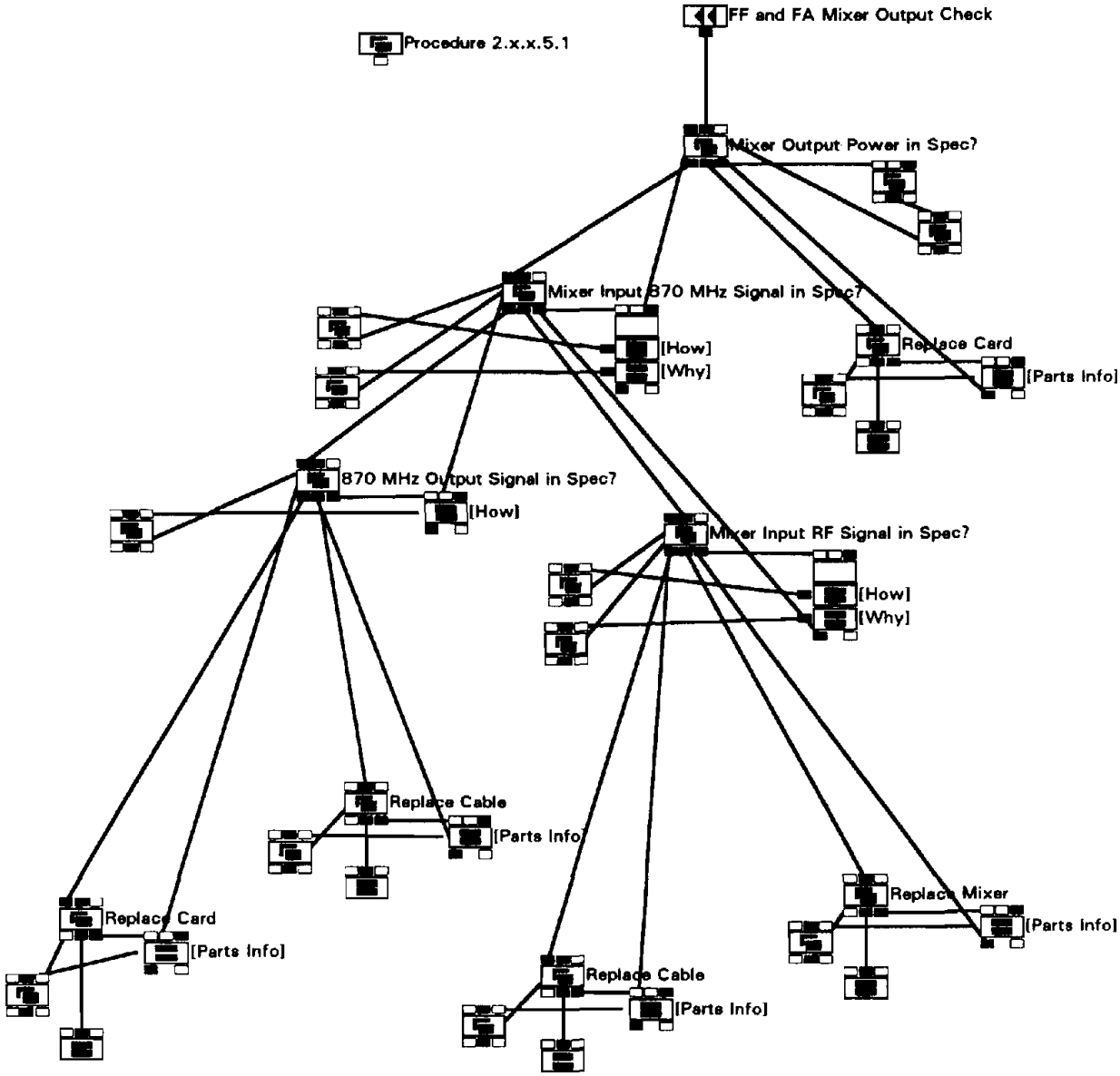
FF and FA Mixer Output Check
Procedure 2.x.x.5.1
Mixer Output Power in Spec?
Mixer Input 870 MHz Signal in Spec?
[How]
[Why]
Replace Card
[Parts Info]
870 MHz Output Signal in Spec?
[How]
Mixer Input RF Signal in Spec?
[How]
[Why]
Replace Cable
[Parts Info]
Replace Card
[Parts Info]
Replace Mixer
[Parts Info]
Replace Cable
[Parts Info]

Name:	**FF AND FA MIXER OUTPUT CHECK**
Number:	2.x.x.5.1
Description:	This procedure is a common element procedure that is part of a common troubleshooting path, FF and FA Common. It utilizes variable values set in All CAS Search and All CAS Track.
Called By:	FF and FA Common
Calls:	None
Expert Drawing:	This procedure corresponds to portions of Expert Drawings on pages SH2F and SH2M.

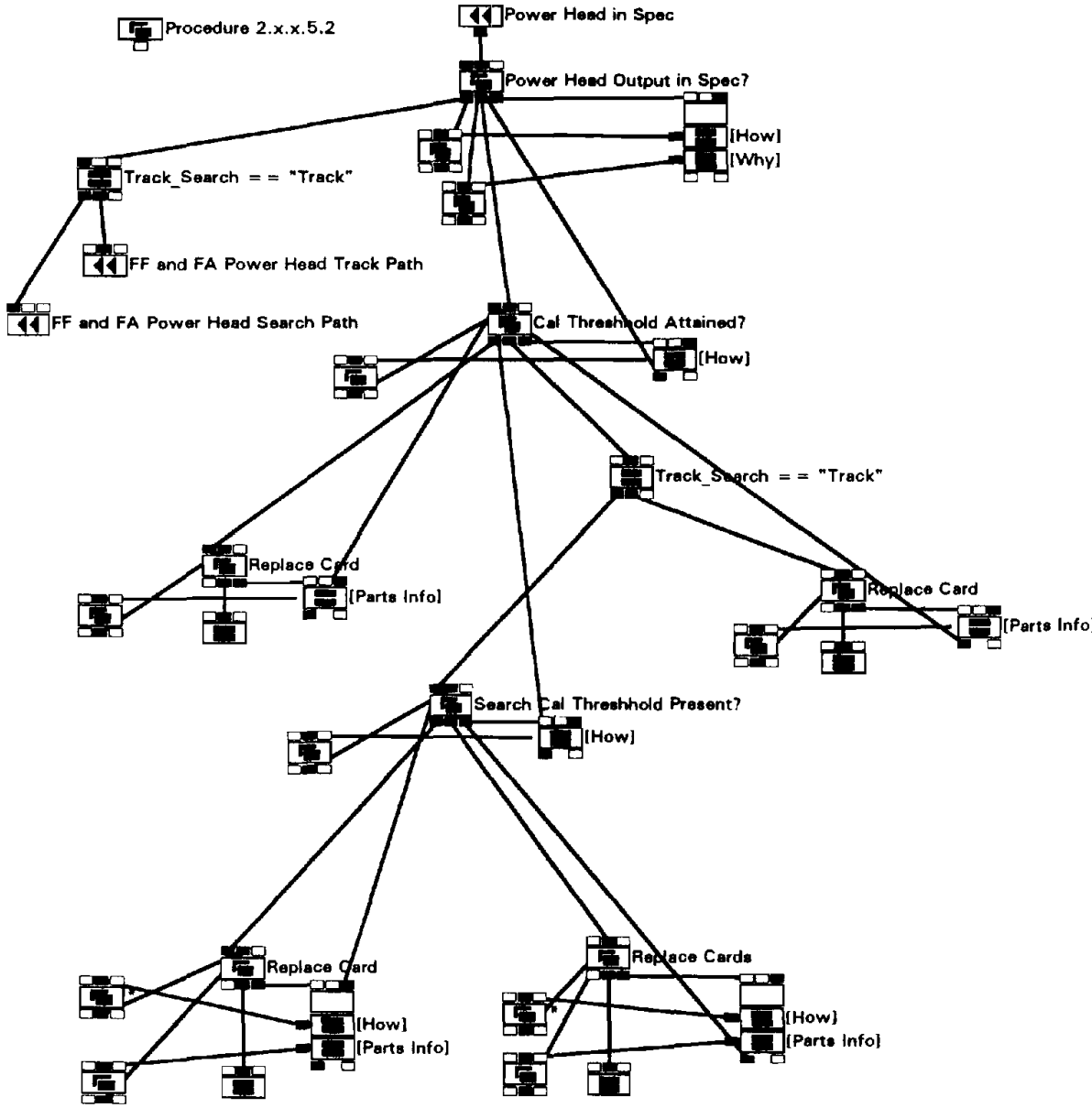
Procedure 2.x.x.5.2
Power Head in Spec
Power Head Output in Spec?
[How]
[Why]
Track_Search = = "Track"
FF and FA Power Head Track Path
FF and FA Power Head Search Path
Cal Threshhold Attained?
[How]
Track_Search = = "Track"
Replace Card
[Parts Info]
Replace Card
[Parts Info]
Search Cal Threshhold Present?
[How]
Replace Card
[How]
[Parts Info]
Replace Cards
[How]
[Parts Info]

Name:	**POWER HEAD IN SPEC**
Number:	2.x.x.5.2
Description:	This procedure is a common element procedure that is part of a common troubleshooting path, FF and FA Common. It utilizes variable values set in All CAS Search and All CAS Track.
Called By:	FF and FA Common
Calls:	FF and FA Power Head Search Path, FF and FA Power Head Track Path
Expert Drawing:	This procedure corresponds to portions of Expert Drawings on pages SH2F.1 and SH2M.1.

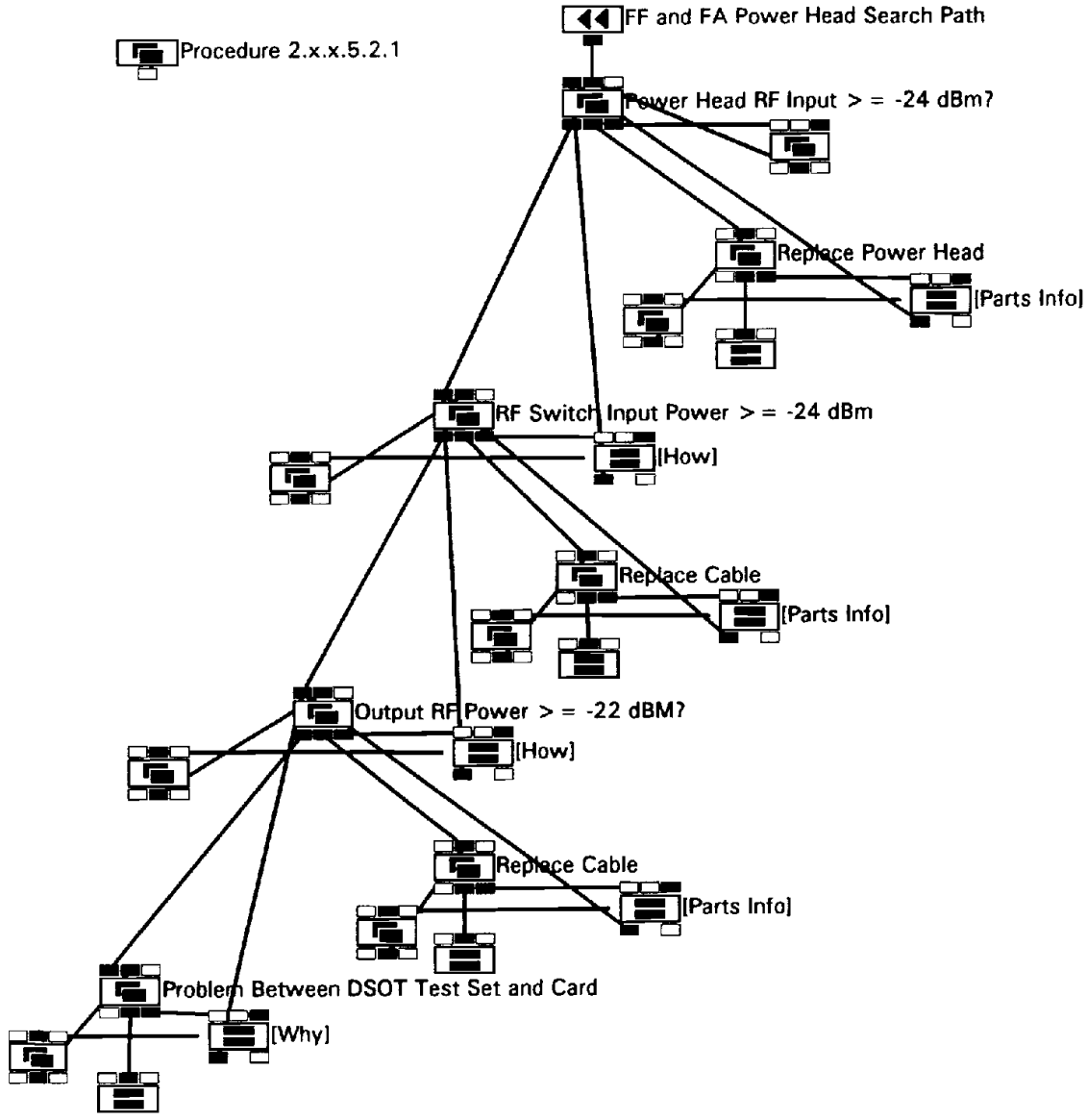
Procedure 2.x.x.5.2.1
FF and FA Power Head Search Path
Power Head RF Input > = -24 dBm?
Replace Power Head
[Parts Info]
RF Switch Input Power > = -24 dBm
[How]
Replace Cable
[Parts Info]
Output RF Power > = -22 dBM?
[How]
Replace Cable
[Parts Info]
Problem Between DSOT Test Set and Card
[Why]

Name:	**FF AND FA POWER HEAD SEARCH PATH**
Number:	2.x.x.5.2.1
Description:	This procedure is a common sub-element procedure that is part of a common troubleshooting path, FF and FA Common. It utilizes variable values set in All CAS Search.
Called By:	FF and FA Power Head In Spec
Calls:	None
Expert Drawing:	This procedure corresponds to a portion of the Expert Drawing on page SH2M.1.

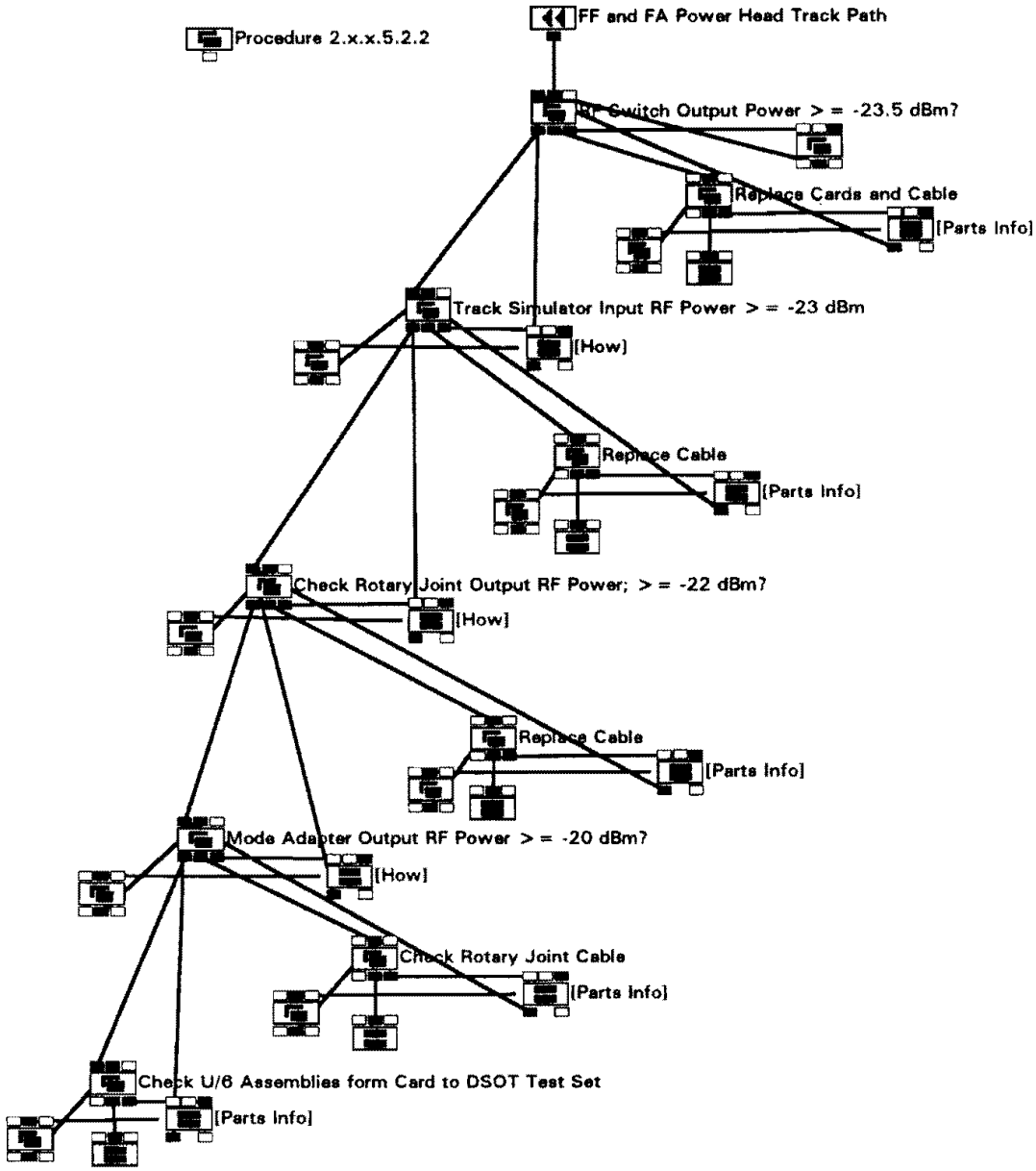
Procedure 2.x.x.5.2.2
FF and FA Power Head Track Path
RF Switch Output Power > = -23.5 dBm?
Replace Cards and Cable
[Parts Info]
Track Simulator Input RF Power > = -23 dBm
[How]
Replace Cable
[Parts Info]
Check Rotary Joint Output RF Power; > = -22 dBm?
[How]
Replace Cable
[Parts Info]
Mode Adapter Output RF Power > = -20 dBm?
[How]
Check Rotary Joint Cable
[Parts Info]
Check U/6 Assemblies form Card to DSOT Test Set
[Parts Info]

Name:	**FF AND FA POWER HEAD TRACK PATH**
Number:	2.x.x.5.2.2
Description:	This procedure is a common sub-element procedure that is part of a common troubleshooting path, FF and FA Common. It utilizes variable values set in All CAS Track.
Called By:	FF and FA Power Head In Spec
Calls:	None
Expert Drawing:	This procedure corresponds to a portion of the Expert Drawing on page SH2F.1

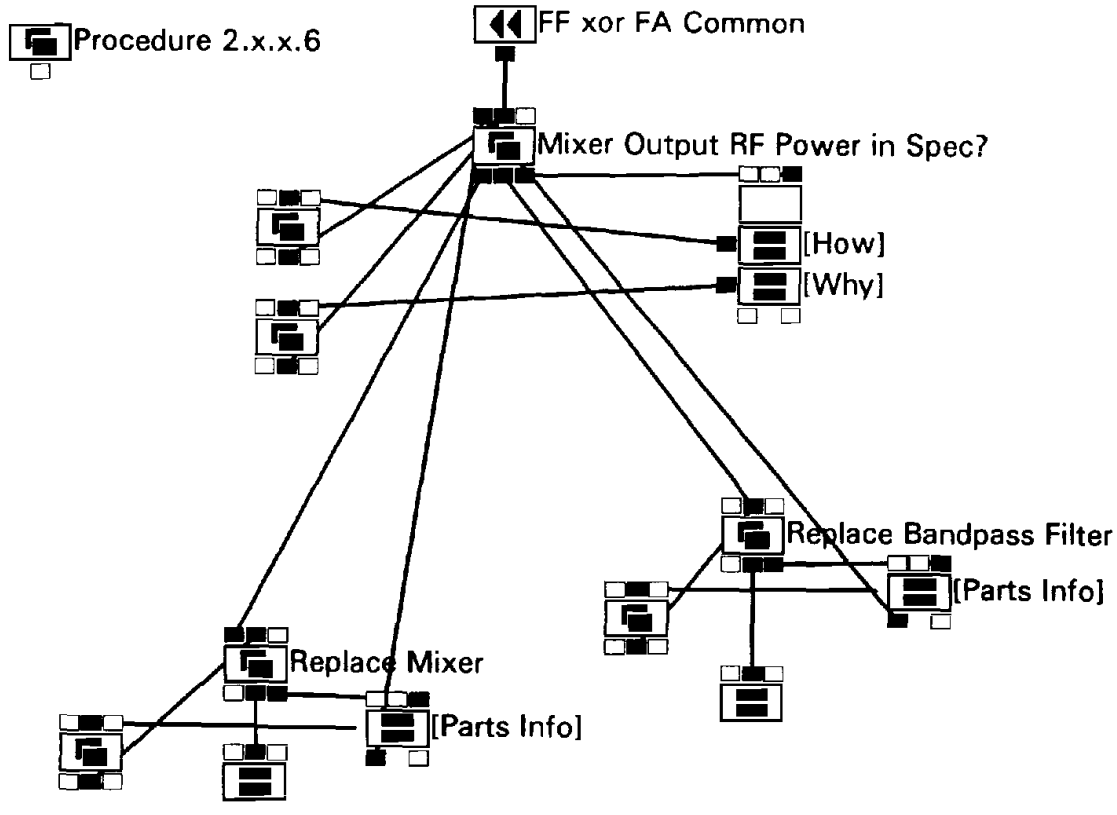
Procedure 2.x.x.6
FF xor FA Common
Mixer Output RF Power in Spec?
[How]
[Why]
Replace Bandpass Filter
[Parts Info]
Replace Mixer
[Parts Info]

Name:	**FF XOR FA COMMON**
Number:	2.x.x.6
Description:	This procedure is common to the troubleshooting paths, All CAS Search FF, All CAS Search FA, All CAS Track FF, and All CAS Track FA. It utilizes variable values that are set in the path procedures CAS Search FF xor FA and CAS Track FF xor FA.
Called By:	CAS Search FF xor FA, CAS Track FF xor FA
Calls:	None
Expert Drawing:	This procedure, when called by the path procedure CAS Search FF xor FA corresponds to the Expert Drawing on page SH2N. When called by CAS Track FF xor FA, it corresponds to the Expert Drawing on page SH2G.

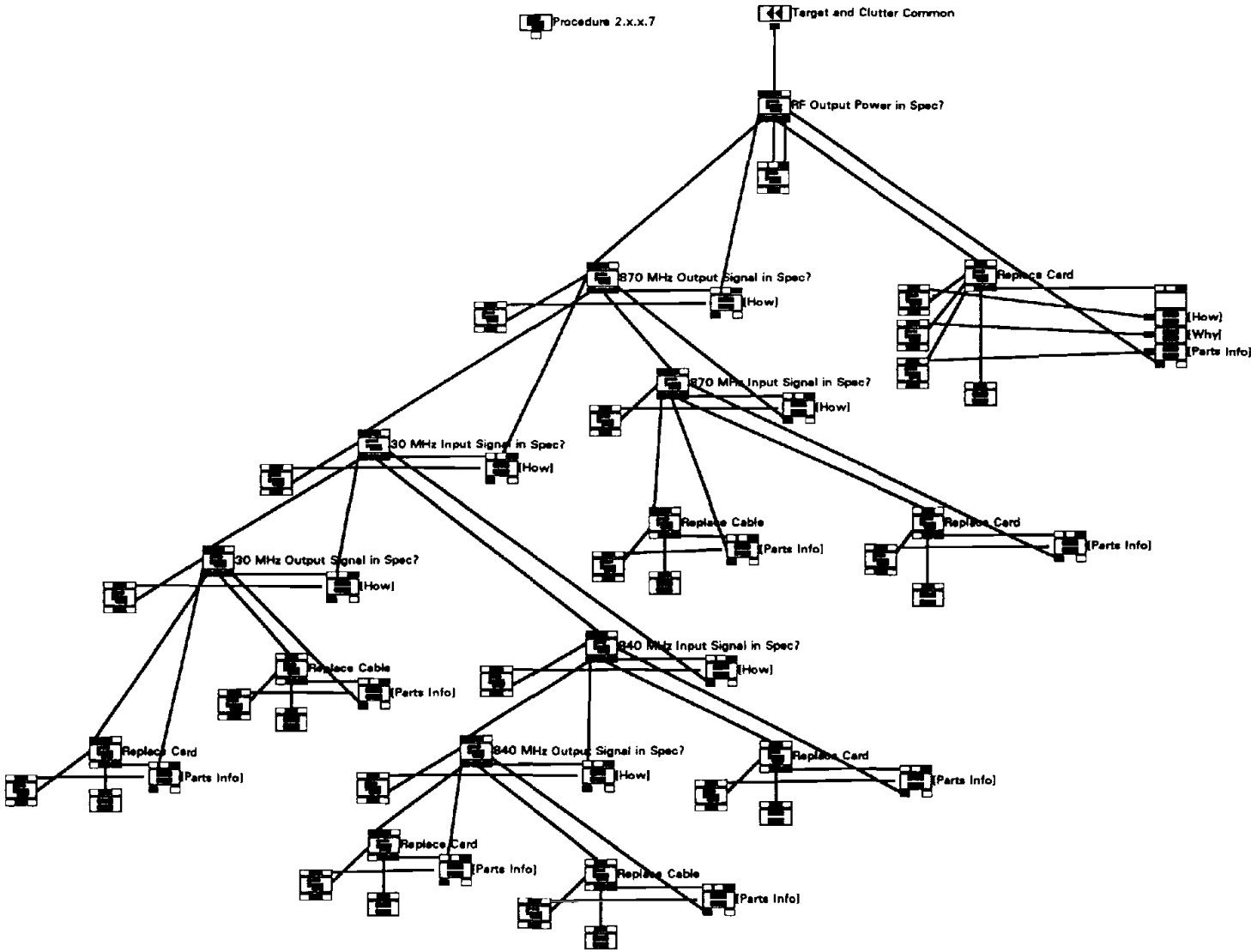
Procedure 2.x.x.7
Target and Clutter Common
RF Output Power in Spec?
870 MHz Output Signal in Spec?
[How]
Replace Card
[How]
[Why]
[Parts Info]
870 MHz Input Signal in Spec?
[How]
30 MHz Input Signal in Spec?
[How]
Replace Cable
[Parts Info]
Replace Card
[Parts Info]
30 MHz Output Signal in Spec?
[How]
840 MHz Input Signal in Spec?
[How]
Replace Cable
[Parts Info]
Replace Card
[Parts Info]
840 MHz Output Signal in Spec?
[How]
Replace Card
[Parts Info]
Replace Card
[Parts Info]
Replace Cable
[Parts Info]

Name:	**TARGET AND CLUTTER COMMON**
Number:	2.x.x.7
Description:	This procedure is common to troubleshooting path procedures CAS Search Target and Clutter, CAS Track Target and Clutter, and STIR Track Target and Clutter. These procedures set variable values for Target and Clutter Common in order to customize the procedure.
Called By:	CAS Search Target and Clutter, CAS Track Target and Clutter, and STIR Track Target and Clutter.
Calls:	None
Expert Drawing:	This procedure corresponds to the Expert Drawing page SH2O when called by CAS Search Target and Clutter. When called by CAS Track Target and Clutter, it corresponds to the Expert Drawing on page SH2H. Finally, when called by STIR Track Target and Clutter, it corresponds to the Expert Drawing on page SH3F.

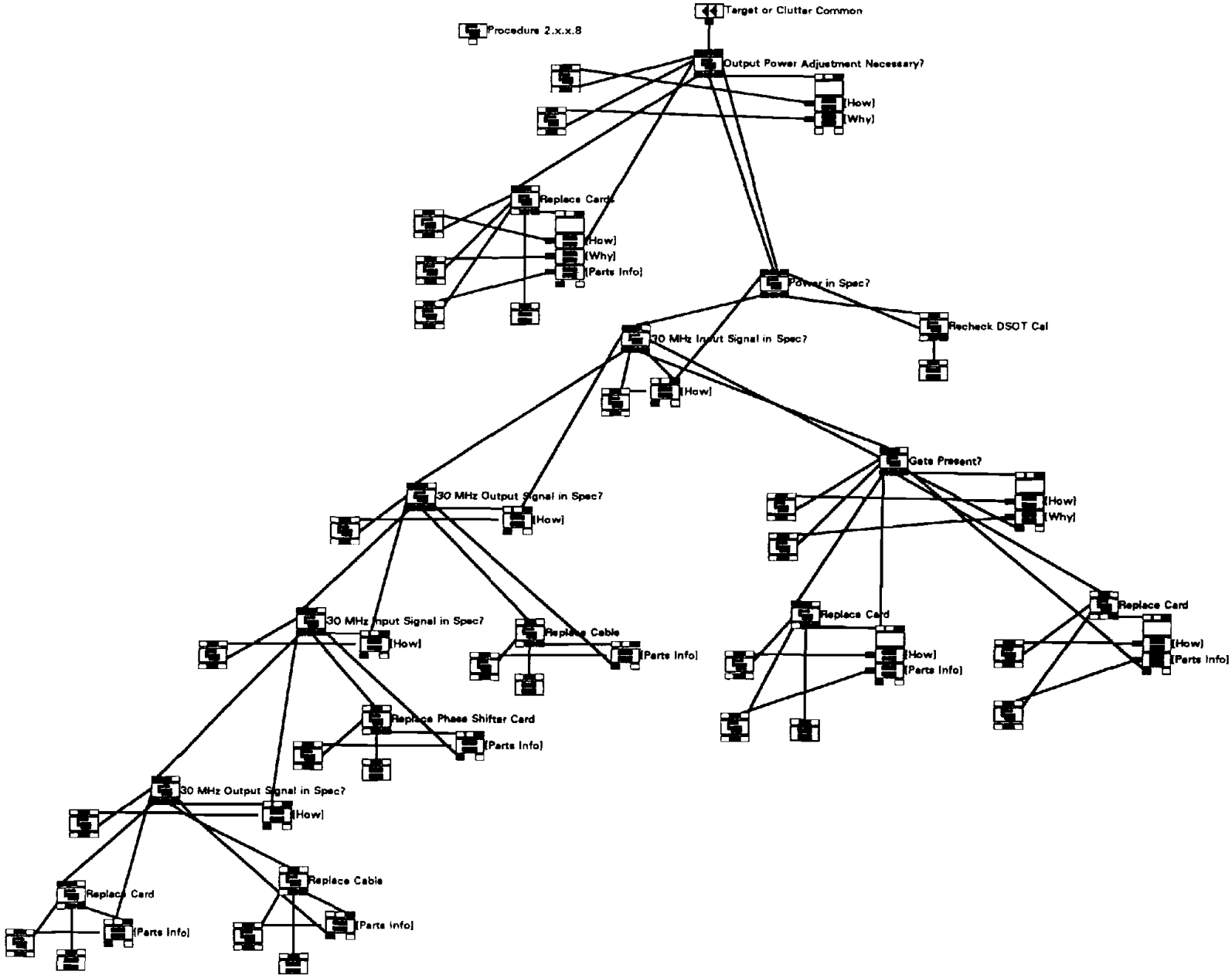
Target or Clutter Common
Procedure 2.x.x.8
Output Power Adjustment Necessary?
[How]
[Why]
Replace Card
[How]
[Why]
[Parts Info]
Power in Spec?
Recheck DSOT Cal
30 MHz Input Signal in Spec?
[How]
Gate Present?
30 MHz Output Signal in Spec?
[How]
[How]
[Why]
30 MHz Input Signal in Spec?
[How]
Replace Cable
[Parts Info]
Replace Card
[How]
[Parts Info]
Replace Card
[How]
[Parts Info]
Replace Phase Shifter Card
[Parts Info]
30 MHz Output Signal in Spec?
[How]
Replace Card
[Parts Info]
Replace Cable
[Parts Info]

Name:	**TARGET OR CLUTTER COMMON**
Number:	2.x.x.8
Description:	This procedure is common to the troubleshooting paths CAS Search Target, CAS Search Clutter, CAS Track Target, CAS Track Clutter, STIR Track Target, and STIR Track Clutter. These procedures set variable values for Target or Clutter Common in order to customize the procedure.
Called By:	CAS Search Target, CAS Search Clutter, CAS Track Target, CAS Track Clutter, STIR Track Target, and STIR Track Clutter.
Calls:	None
Expert Drawing:	This procedure corresponds to following path procedures' Expert Drawing pages: CAS Search Target (SH2P); CAS Search Clutter (SH2Q); CAS Track Target (SH2I) ; CAS Track Clutter (SH2J); STIR Track Target (SH3G); and STIR Track Clutter (SH3H).

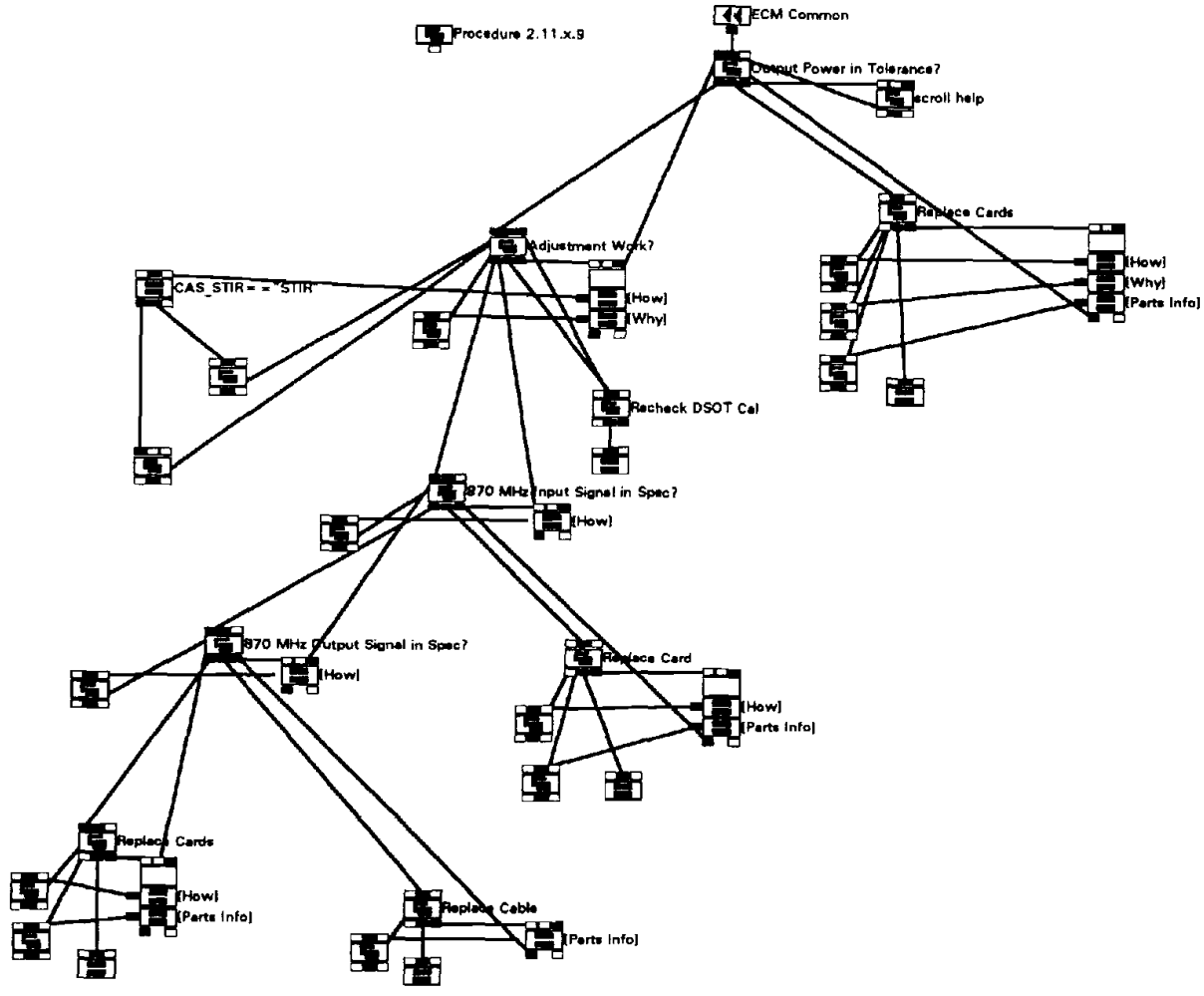
ECM Common
Procedure 2.11.x.9
Output Power in Tolerance?
scroll help
Replace Cards
[How]
[Why]
[Parts Info]
Adjustment Work?
CAS_STIR = = "STIR"
[How]
[Why]
Recheck DSOT Cal
970 MHz Input Signal in Spec?
[How]
970 MHz Output Signal in Spec?
[How]
Replace Card
[How]
[Parts Info]
Replace Cards
[How]
[Parts Info]
Replace Cable
[Parts Info]

Name:	ECM COMMON
Number:	2.11.x.9
Description:	This procedure is common to the troubleshooting paths of CAS Search ECM, CAS Track ECM, and STIR Track ECM. These path procedures set variable values for ECM Common in order to customize the procedure.
Called By:	CAS Search ECM, CAS Track ECM, STIR Track ECM
Calls:	None
Expert Drawing:	This procedure corresponds to the Expert Drawing page SH2R when CAS Search ECM is called, to SH2K when CAS Track ECM is called, and SH3I when STIR Track ECM is called.

APPENDIX B

VARIANCES BETWEEN CALIBRATION AND PERFORMANCE MODULES

This section describes the differences between the performance and calibration implementations of the MK92 MAES. Some calibration implementation aspects are transparent to the user and are important only for readability, maintainence, and reuse purposes. Others are user interface issues that differ from the standards built into the initial performance module, and require resolution before a single, integrated MK92 MAES can be deployed.

A. SCREEN DISPLAYS

Screen display differences reflect both the desire for an engaging interface for the technician and the lessons learned while using the Adept expert system shell.

1. Bitmap Objects

The bitmap object, the MK92 logo, in the standard Performance display is moved from the foreground to the background. This resulted in a smoother transition from display to display. The bitmap is anchored in the background flush against the left border of the display field. This arrangement provides more space for text and eliminates any tendency of the bitmap to "drift" between displays. Because backgrounds are shared by all displays within a single

application, it must be similarly moved in the performance module in the integrated MK92 MAES.

2. Text and Text Objects

The calibration module uses Arial 12 point bold as the standard font. We felt that this font is easier to read than the San Serif used in the performance module. Our text is top-left justified within the text object in the display rather than center-center justified. The text object is positioned 0.375 inches to the right of the bitmap, with its top edge flush with the top edge of the bitmap object. This arrangement provided a uniform starting location for the text field in any display. The readability of the new arrangements need to be tested with typical users.

Text objects with scroll bars are used when insufficient room was available within one display for a given piece of textual information. This eliminates chaining of display nodes to provide more text space, which thus forced the user to page through several screens. A similar strategy is used for help information.

3. Buttons

The calibration module uses the standard specifications of grey pushbuttons used in performance's display action buttons. The major difference comes with "Help" buttons. The calibration module uses the right side of the "Procedure" area (middle area) for help and page back

actions. The performance modules uses only the "Action" area, and help information does not show what kind of help is available. We felt that using separate buttons for "How", "Why", and "Parts Info" help and moving those buttons and the "Prev Screen" button to a different section of the display created a clearer separation between auxiliary functions that assist the user with the program and actual troubleshooting actions.

Another difference is the use of check boxes in the Printout Entry Menu. These were used to take multiple indication input from the user for analyzing system failures. The Manual Menu uses a list box to choose one condition/path based on the user's input. Both of these methods are used in place of a series of screens with multiple pushbuttons.

B. DESIGN ASPECTS

Several aspects of Calibration's design differ significantly from Performance. They range from how procedures are named to how the program analyzes and navigates through a problem. These issues are important from the maintenance standpoint. Where they result in changes that impact the user, functional features or interface ergonomics, they should be evaluated to determine which "flavor" works best.

1. One-Way versus Two-Way Links

Performance is built around one-way links (Adept Result nodes). This results in a "stovepipe" operation where

the user selects an area through a series of menus. The ability to backtrack exists only where a new one-way link is created as a menu choice. The initial analysis of the casualty is left to the user, who selects the path through an ever-narrowing series of case statements.

Calibration uses two-way links (Adept Goal nodes). The "road map" for Calibration takes the user through a comprehensive analysis of casualties and assignment of paths to correct them. Two-way links enable a design built around a top-down hierarchy of procedures that call each other using two-way links. The final design is modular and structured, where the system starts at the Main Menu, goes through casualty analysis, path assignment, path execution, and then returns to the Main Menu.

Two-way links enable the system to handle multiple path assignments. Where the performance module requires explicit user input to select a new path, the calibration module assigns all required paths based on the indications entered by the user at the very beginning of the session and proceeds through those paths in prioritized order until they are all completed.

2. Use of Common Procedures

Our initial inspection of the expert knowledge revealed paths that appeared to be exactly the same. Close examination showed that if variables were used several diagnostic paths could share a common procedure to

troubleshoot different casualties. The final design includes three ways of implementing specific troubleshooting paths:

- completely unique paths that share no elements with any other path;
- completely common paths that share all elements with at least one other path;
- hybrid paths that share some elements with at least one other path.

Of the twenty-seven specific paths in Calibration, three are completely unique. Nine common procedures satisfy twenty-two more specific paths. The last two paths are hybrids, with some unique elements and one common procedure. In the performance module, similar sections are duplicated in various procedures, making the program harder to maintain and modify.

It should be noted, however, that the use of common procedures could complicate the maintenance of the module. A common path requires more care in modification, because all the specific paths that call it need to be satisfied. The use of variables in multiple displays within one common procedure necessitates extreme care when modifying a variable. For example, a proposed change to the STIR AFC path must either have a matching change for CAS AFC or provide for a unique element within the procedure AFC Common because both CAS AFC and STIR AFC use AFC Common to troubleshoot their paths.

3. Casualty Analysis

Calibration uses a check box interface to gather user input on MK92 FCS indications from the DSOT printout.

The system analyzes these indications and determines which casualty conditions exist. These conditions are prioritized and the system troubleshoots them in that order. A screen showing the user which paths the system will troubleshoot is displayed to the user. This screen allows reentry of data for reevaluation, continuation with the system's choices, or the opportunity to abandon failure analysis and use the Manual Menu for direct selection of a specific path.

4. Naming Conventions

We made a conscious effort to use names that are unambiguous and readily understandable. Adept allows up to thirty-two characters for variable and procedure names. Performance names seemed obscure at times, and our purpose was to have the program be as free of arcane abbreviations as possible.

APPENDIX C

MK92 FCS DSOT CALIBRATION CASUALTY CONDITION ANALYSIS

This appendix lays out the domain expert's logic in analyzing the DSOT printout indications to determine which casualty conditions exist. The relative priorities of the conditions are established according to the following basic reasoning:

- CAS is more critical than STIR;
- Fixed frequency (FF) modes are more critical than frequency agile (FA) modes;
- Search modes are more critical than track modes;
- Target modes are more critical than clutter modes, and both are more critical than ECM modes.

There are three tables in this appendix. Table 1 translates the DSOT indications to the variables used within the application. Table 2 relates combinations of DSOT indications and their corresponding casualty conditions. Table 3 associates casualty conditions with the specific troubleshooting paths used to isolate faults of those conditions.

Table 1.

DSOT Printout	Indication	Variable
STIR AFC	STIR AFC	STIR AFC
CAS AFC	CAS AFC	CAS AFC
TR TGT FF	CAS Track Target Fixed Frequency	a
TR CLT FF	CAS Track Clutter Fixed Frequency	b
TR ECM FF	CAS ECM Fixed Frequency	c
TR TGT FA	CAS Track Target Frequency Agile	d
TR CLT FA	CAS Track Clutter Frequency Agile	e
TR ECM FA	CAS Track ECM Frequency Agile	f
SR TGT FF	CAS Search Target Fixed Frequency	g
SR CLT FF	CAS Search Clutter Fixed Frequency	h
SR ECM FF	CAS Search ECM Fixed Frequency	i
SR TGT FA	CAS Search Target Frequency Agile	j
SR CLT FA	CAS Search Clutter Frequency Agile	k
SR ECM FA	CAS Search ECM Frequency Agile	l
ST TGT FF	STIR Track Target Fixed Frequency	a1
ST CLT FF	STIR Track Clutter Fixed Frequency	b1
ST ECM FF	STIR Track ECM Fixed Frequency	c1
ST TGT FA	STIR Track Target Frequency Agile	d1
ST CLT FA	STIR Track Clutter Frequency Agile	e1
ST ECM FA	STIR Track ECM Frequency Agile	f1

Table 2.

#	Casualty Conditions	Indication
1	All CAS and STIR	a+b+c+d+e+f+g+h+ i+j+k+l+a1+b1+c1 +d1+e1+f1
2	CAS AFC	CAS AFC
3	All CAS Modes	a+b+c+d+e+f+g+h+ i+j+k+l
4	All CAS - FF	a+b+c+g+h+i
5	All CAS Non ECM	a+b+d+e+g+h+j+k
6	All CAS Non ECM - FF	a+b+g+h
7	CAS Search	g+h+i+j+k+l
8	CAS Search - FF	g+h+i
9	CAS Search Target and Clutter	g+h+j+k
10	CAS Search Target and Clutter - FF	g+h
11	CAS Search Target	g+j
12	CAS Search Target - FF	g
13	CAS Search Clutter	h+k
14	CAS Search Clutter - FF	h
15	CAS Track	a+b+c+d+e+f

16	CAS Track - FF	a+b+c
17	CAS Track Target and Clutter	a+b+d+e
18	CAS Track Target and Clutter - FF	a+b
19	CAS Track Target	a+d
20	CAS Track Target - FF	a
21	CAS Track Clutter	b+e
22	CAS Track Clutter - FF	b
23	STIR AFC	STIR AFC
24	All STIR Modes	a1+b1+c1+d1+e1+ f1
25	All STIR - FF	a1+b1+c1
26	STIR Track Target and Clutter	a1+b1+d1+e1
27	STIR Track Target and Clutter - FF	a1+b1
28	STIR Track Target	a1+d1
29	STIR Track Target - FF	a1
30	STIR Track Clutter	b1+e1
31	STIR Track Clutter - FF	b1
32	All CAS Non ECM - FA	d+e+j+k
33	All CAS - FA	d+e+f+j+k+l

34	CAS Search - FA	j+k+l
35	CAS Search Target and Clutter - FA	j+k
36	CAS Search Target - FA	j
37	CAS Search Clutter - FA	k
38	CAS Track - FA	d+e+f
39	CAS Track Target and Clutter - FA	d+e
40	CAS Track Target - FA	d
41	CAS Track Clutter - FA	e
42	All STIR - FA	d1+e1+f1
43	STIR Track Target and Clutter - FA	d1+e1
44	STIR Track Target - FA	d1
45	STIR Track Clutter - FA	e1
46	All CAS ECM	c+f+i+l
47	All CAS ECM - FF	c+i
48	All CAS ECM - FA	f+l
49	CAS Search ECM	i+l
50	CAS Search ECM - FF	i
51	CAS Search ECM - FA	l
52	CAS Track ECM	c+f

53	CAS Track ECM - FF	c
54	CAS Track ECM - FA	f
55	STIR Track ECM	c1+f1
56	STIR Track ECM - FF	c1
57	STIR Track ECM - FA	f1

Table 3.

Path Procedures	Called by Casualty Conditions
All CAS and STIR	All CAS and STIR
CAS AFC	CAS AFC
All CAS Modes	All CAS Modes
CAS Fixed Frequency	All CAS - FF
All CAS Search	All CAS Search
All CAS Track	CAS Track
STIR AFC	STIR AFC
All STIR Modes	All STIR Modes
STIR Fixed Frequency	All STIR - FF
CAS Frequency Agile	All CAS - FA
STIR Frequency Agile	All STIR - FA
All CAS ECM	* All CAS ECM * All CAS ECM - FF * All CAS ECM - FA
CAS Search ECM	* CAS Search ECM * CAS Search ECM - FF * CAS Search ECM - FA

CAS Track ECM	* CAS Track ECM * CAS Track ECM - FF * CAS Track ECM - FA
STIR Track ECM	* STIR Track ECM * STIR Track ECM - FF * STIR Track ECM - FA
All CAS Non ECM	* All CAS Non ECM * All CAS Non ECM - FF * All CAS Non ECM - FA
CAS Search FF xor FA	* CAS Search - FF * CAS Search - FA
CAS Search Target and Clutter	* CAS Search Target and Clutter * CAS Search Target and Clutter - FF * CAS Search Target and Clutter - FA
CAS Search Target	* CAS Search Target * CAS Search Target - FF * CAS Search Target - FA
CAS Search Clutter	* CAS Search Clutter * CAS Search Clutter - FF * CAS Search Clutter - FA
CAS Track FF xor FA	* CAS Track - FF * CAS Track - FA

CAS Track Target and Clutter	* CAS Track Target and Clutter * CAS Track Target and Clutter - FF * CAS Track Target and Clutter - FA
CAS Track Target	* CAS Track Target * CAS Track Target - FF * CAS Track Target - FA
CAS Track Clutter	* CAS Track Clutter * CAS Track Clutter - FF * CAS Track Clutter - FA
STIR Track Target and Clutter	* STIR Track Target and Clutter * STIR Track Target and Clutter - FF * STIR Track Target and Clutter - FA
STIR Track Target	* STIR Track Target * STIR Track Target - FF * STIR Track Target - FA
STIR Track Clutter	* STIR Track Clutter * STIR Track Clutter - FF * STIR Track Clutter - FA

LIST OF REFERENCES

1. Lewis, Clinton Dean, *Development of a Maintenance Advisor Expert System for the MK 92 MOD 2 Fire Control System: FC-1 Designation - Time, FC-1 Track - Bearing, Elevation and Range, and FC-2 Track - Bearing, Elevation and Range*. Master's Thesis, Naval Postgraduate School, Monterey, California, September 1993.

2. Smith, C.D., *Development of a Maintenance Advisor Expert System for the MK 92 MOD 2 Fire Control System: FC-1 Designation - Time, Range, Bearing; FC-1 Acquisition; FC-1 Track - Range, Bearing; FC-2 Designation - Time, Range, Bearing, FC-2 Acquisition, FC-2 Track - Range, Bearing; and FC-4 and FC-5*. Master's Thesis, Naval Postgraduate School, Monterey, California, September 1993.

3. Prerau, D.S., *Developing and Managing Expert Systems: Proven Techniques for Business and Industry*, Addison-Wesley Publishing Company Inc., Menlo Park, California, 1990.

4. Powell, Steven H., *Economic Analysis of the MK 92 MOD 2 Maintenance Advisor Expert System*, Master's Thesis, Naval Postgraduate School, Monterey, California, September 1993.

5. Himes, A., and Sperry, S., *Using Symbologic Adept*, Version 2.1, Symbologic Corporation, 1991.

INITIAL DISTRIBUTION LIST

	Number of Copies
1. Defense Technical Information Center Cameron Station Alexandria, Virginia 22304-6145	2
2. Library, Code 052 Naval Postgraduate School Monterey, California 93943-5002	2
3. Naval Sea Systems Command, Code 62Z 2531 Jefferson Davis Hwy. Washington, D.C. 22242-51603	1
4. Naval Sea Systems Command, Code 62ZP 2531 Jefferson Davis Hwy. Washington, D.C. 22242-51603 Attn: Ed McGill	1
5. Naval Sea Systems Command, Code 62ZPG 2531 Jefferson Davis Hwy. Washington, D.C. 22242-51603 Attn: FCC Stein	1
6. Commander, Code 4W32 Naval Surface Warfare Center, Port Hueneme Division 4363 Missile Way Port Hueneme, CA 93043-4307 Attn: Henry Seto	1
7. Professor Magdi Kamel, Code SM/Ka Naval Postgraduate School Monterey, CA 93943-5000	2
8. Professor Martin J. McCaffrey, Code SM/Mf Naval Postgraduate School Monterey, CA 93943-5000	2
9. LT David M. Geick Department Head Class Surface Warfare Officers School Command 446 Cushing Road Newport, RI 02841-1209	1
10. LT Steven E. Mikler, Code 37 Naval Postgraduate School Monterey, CA 93943-5000	1

DUDLEY KNOX LIBRARY
NAVAL POSTGRADUATE SCHOOL
MONTEREY CA 93943-5101

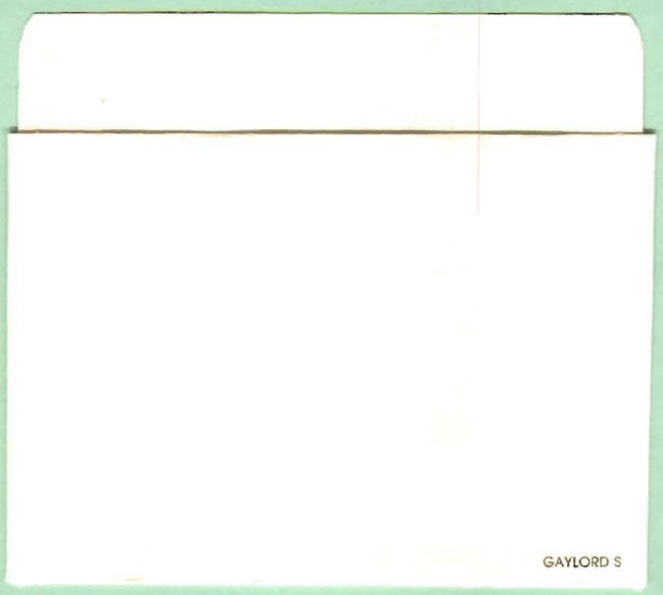

DUDLEY KNOX LIBRARY
3 2768 00019615 8