1948

A coaxial carrier-communications system

Wiederspahn, W. H.; Wiederspahn, W. H.

Monterey, California. U.S. Naval Postgraduate School

http://hdl.handle.net/10945/31624

A COAXIAL CARRIER-COMMUNICATIONS SYSTEM

W. H. Wiederspahn

This work is accepted as fulfilling
the thesis requirements for the degree of

from the
United States Naval Postgraduate School

[redacted]
Chairman

Department of Physics and Electronics

Approved: [redacted]
Academic Dean

PREFACE

This work constitutes a survey investigation of the L1 carrier system employed by the Bell Telephone Company for transmission of telephone messages. Although the system is being used experimentally for television transmission no comprehensive program of commercial application is presently being carried out; such a program should materialize in the very near future. For this reason emphasis has been placed on the voice transmission aspects of the system. It should be evident however that minor changes in equipment will also provide for a wide band television transmission.

The chapters have been arranged according to the functional features of the components of the system. No rigorous analysis has been attempted. It is believed the general treatment given is sufficient for an overall understanding of the system and its operation.

The more outstanding developments which have made the L1 system possible are treated in more detail in the later pages. The components so outlined are the amplifiers and cables. The chapter on crosstalk deals in general terms with the features of repeatered systems. Considerations developed are especially applicable to television transmission and the chapter was included for that reason.

The basic power supply may not be properly classfied under the head of "Electronics", but a description of it has been included because it presents a symbol of achievement, both technically and economically, for the entire L1 system. It will be used per se for other carrier systems wh which are still far in the future.

Technical and engineering details of design, application and maintenance will be missing in the following pages. Effort has been

expended in the direction of clarity and simplification in order to present average performance characteristics of the system.

I am especially grateful for the wise counsel and enduring patience which I received at the hands of Messrs. L. G. Abraham, K. E. Gould, M. E. Campbell, S. A. Levin, O. D. Grismore, F. M. Jones, T. Gleichman, I. G. Wilson, J. P. Radcliff, R. W. Marshall, and Miss M. V. Kummer, while a resident visitor at the Bell Telephone Laboratories from 5 January to 20 March 1948.

TABLE OF CONTENTS

Chapter I. 1
- Introduction 1
- Basic Philosophy 2
- Functional Components 4
- Terminal Equipment 4
- Coaxial Cable 7
- Repeaters 8
- Power Supply 9

Chapter II 11
- Channel Banks and V.F. Termination 11
- Voice Frequency Terminating Circuit 11
- Four Wire V.F.Test Bay 13
- Channel Modem 13
- Group and Supergroup Equipment(General) 16
- Group Terminal Equipment 16
- Supergroup Equipment 19

Chapter III 20
- Carrier and Pilot Supply(General) 20
- 4 KC Frequency Supply Circuit 20
- 4 KC Harmonic Generator 22
- Channel Carrier Filters 24
- Group Carrier Supply 25
- Supergroup Carrier Supply Circuit 27
- Synchronizing Frequency Amplifier and Comparison Circuit 28
- Emergency Provisions 29
- Carrier Generator Transfer and Alarm Circuits 31
- Pilot Frequency Supply Circuits 32

Chapter IV 33
- Line Arrangements For L1 Carrier(General) 33
- Line Arrangement For Office Amplifiers 33
- Line Arrangements For Auxiliary Amplifiers 38
- Panels 38

Chapter V 41
- Regulators(General) 41
- Manual Gain Control Unit 41
- Dynamic Regulators 45
- 2-a Thermistor 48
- Equalizers(General) 49
- Equalizers 50
- "A" Equalizers 50

Chapter VI 57
Pilot Indicators And Alarms 57
Continuous Pilot Level Measurement 58
Pilot Alarm System 59

Chapter VII 64
Repeater Power Supply Arrangements(General) 64
Power Supply Circuit 65

Chapter VIII 74
Amplifiers(Introduction) 74
Feedback Amplifier Considerations 74
Volume Performance 79
Maximum Feedback 82
Stability And Noise 90
L1 System Amplifiers 92

Chapter IX 95
Crosstalk(Introduction) 95
Preliminary Considerations 96
Crosstalk Between Two Coaxials 98

LIST OF ILLUSTRATIONS

FIG.		PAGE
1	Frequency Translations	3
2	General Overall Schematic of Type L1 (3 Megacycle) Telephone System	5
3	Channel Schematic- A2 Bank	12
4	Loss Frequency Characteristics and Circuit Schematics of 75 and 219 Type Band Filters	15
5	Group Terminal Equipment	17
6	Supergroup Terminal Equipment	17
7	Block Schematic of the Carrier and Pilot Supply	21
8	Schematic of the 4-KC Frequency Supply Circuit	23
9	Schematic of the 4-KC Harmonic Generator	26
10	Schematic and Typical Insertion Loss Characteristics of the Channel Carrier Supply Filters	26
11	Schematic of the Frequency Comparison Circuit	30
12	Block Schematic of a Terminal Repeater, or, with the Omissions Indicated, of One-half A Switching Main Repeater	35
13	Block Diagram Showing Connections at A Switching Main Repeater	37
14	Face of Auxiliary Repeater Panel	40
15	Simplified Schematic of Manual Gain control Unit, Connected to Repeater Power Supply	43
16	Simplified Schematic of 64 KC Regulator	43

17	Typical Loss Characteristic- 64 KC Crystal Unit	47
18	Typical curve of Regulator Output Voltage vs. Rectifier Current or Pilot at Input	47
19	2A Thermistor	47
20	Typical Resistance -Heater Current Characteristic of 2A Thermistor at an Ambient Temperature of 70 F	47
21	Schematic of 53A Equalizer	51
22	Loss Characteristic, 53A Equalizer	51
23	Maximum, Average and Minimum Loss Characteristics of D-163386 Equalizer	53
24	D-G Control Circuits for Regulating Networks	53
25	Change in Equalizer Loss in db at Frequency Indicated	55
26	Face View of D-163386 Equalizer	56
27	Block Diagram of Pilot Indicator Circuit	60
28	Simplified Schematic of Rectifier and D-C Amplifier	60
29a	Photograph of Pilot Alarm Unit	60
29b	Simplified Schematic of Pilot Alarm Unit Connected to Pilot Alarm Pair	60
30	Simplified Schematic of Pilot Alarm System	63
31	Schematic of a Power Section	66
32	Simplified Schematic of Repeater or Amplifier Power Supply	66
33	Rectifier Operation Voltage Regulation, Manual or Automatic, Automatic Shown	71
34	Inverter Operation	71
35	Schematic of a Feedback Unit	75

36	3000 KC Coaxial System Line Amplifier	80
37	Beta Circuit Loss and Phase for Line Amplifier	85
38	3000-1 Amplifier Volume Performance	83
39	Measured Values of Curves for Line Amplifier	85
40	Illustration of Equation 8 for Ideal Curves	87
41	3000-1 Amplifier Asymptote Structure	89
42	Typical Gain-Frequency Characteristic of Receiving Amplifier in Tandem with an Input Separation Filter	94
43a	Gain from Input of Hybrid Coil to Output of Transmitting Amplifier, and Transmission Levels and Pilot Powers at the Output of the Transmitting Amplifier or Auxiliary Amplifier	94
43b	Typical Gain Frequency Characteristic of a Line Section, Hybrid In to Receiving Amplifier Out, and Levels at Receiving Amplifier Out	94
44	Crosstalk Schematic for Two Coaxials	98
45	Crosstalk Schematic for two Unterminated Coaxials	101
46	Crosstalk Schematic for a Tertiary Circuit	106

CHAPTER I

INTRODUCTION

The early discovery of the linearity of transmission media made the growth of carrier communications possible. The same phenomena which produced two intelligible conversations from different sources on the same set of wires in the early stages of telephone communications, has been extended by carrier means to maintain many conversations on the same set of wires separable. In a word, the technique of telephone transmission has been altered; making possible the simultaneous transmission of as many as 480 separate voice signals or one wide-band television program in the present Bell Telephone Company's L1 carrier system.

The possibility of many communications channels over a single point-to-point transmission system naturally appeals to the economic aspirations of public service and commercial enterprises. This economic feature coupled with an insistent demand on the part of the public for additional services has provided for the growth of carrier systems to their present degree of complexity in design and function.

The L1 carrier system described by this paper is by no means the ultimate goal of such systems. A future installation now in the development stage contemplates use of at least twice the band width of the L1 system. It may be possible for time-duplexing or wave guide transmission of micro-waves to extend the usefulness of this art still further. The L1 system however represents the considerably advanced stage of the carrier technique as applied at present.

BASIC PHILOSOPHY

All human speech falls into a specified frequency range. The range necessary for acceptable intelligibility and quality has been determined by the TELEPHONE COMPANY to be from 0-4 KC. Therefore for any acceptable communications system the transmission and reception of this frequency band is essential. The philosophy of carrier technique then becomes one of frequency transposition. All 0-4 KC voice channels are transposed to a higher frequency for transmission and then retransposed for reception to the original range. This frequency transposition is complicated because of unilateral mediums for transposition. The carrier system must therefore be a directional system with one circuit for transmission and another for reception.

Figure (I) shows in principle the frequency transpositions used in the L1 system. The basic voice channels are grouped into sets of 12, transposed to range in frequency from 60 KC to 108 KC with no frequency gaps between channels. Five basic groups are then transposed in frequency to form a second set of frequencies ranging from 312 KC to 552 KC, referred to in the figure as a basic supergroup, and representing 60 voice channels or subscribers. Eight basic supergroups are then transposed in frequency through out the range 64 Kc to 2044 KC to form the carrier frequencies which are placed on the line for transmission to a remote point. The total carrier band therefore represents 480 channels or subscribers. For reception from a remote point the reverse of the transpositions shown by Figure (I.) are made. Assuming then that transmission and reception are necessary for adequate communication the capacity of the system has been increased from a maximum of 3 ordinary voice channels (by virtue of phantom loading) to

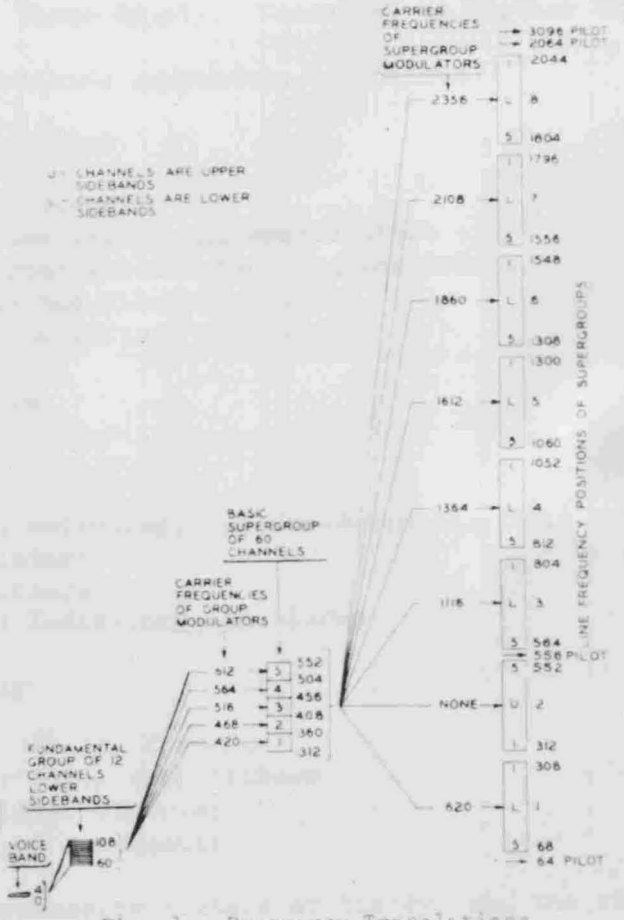

Fig. 1 - Frequency Translations

480 voice channels, an increase of 160 times.

FUNCTIONAL COMPONENTS

L1 system carrier equipment is divided most readily into functional components. These components include (a) Terminal equipment, (b) Coaxial cable, (c) Repeaters, (d) Power supply. These may be further broken up into more specialized functional components as follows:

(1) Terminal Equipment

1. Channel Banks
2. Group Modulators and Demodulators
3. Supergroup Demodulators and Modulators
4. Carrier and Pilot Supplies
5. Office Amplifiers and Panels

(2) Coaxial Cable

(3) Repeaters

(1) Line; Switching, and Non-Switching, Main Repeaters
(2) Regulators
(3) Equalizers
(4) Pilot Indicators and Alarms

(4) Power Supply

(1) Power Supply Circuit
(2) Power Separation Filters
(3) Rectifier-Inverter
(4) Loading Components

To give a more conprehensive pictore of the system, the above components are described briefly in order that a more logical inter-association may be felt as detailed descriptions are given in later chapters. Figure (2) is a block schematic of the overall L1 system.

TERMINAL EQUIPMENT

1. Channel Banks.

"Channel Bank" is the name applied to the equipment which is used

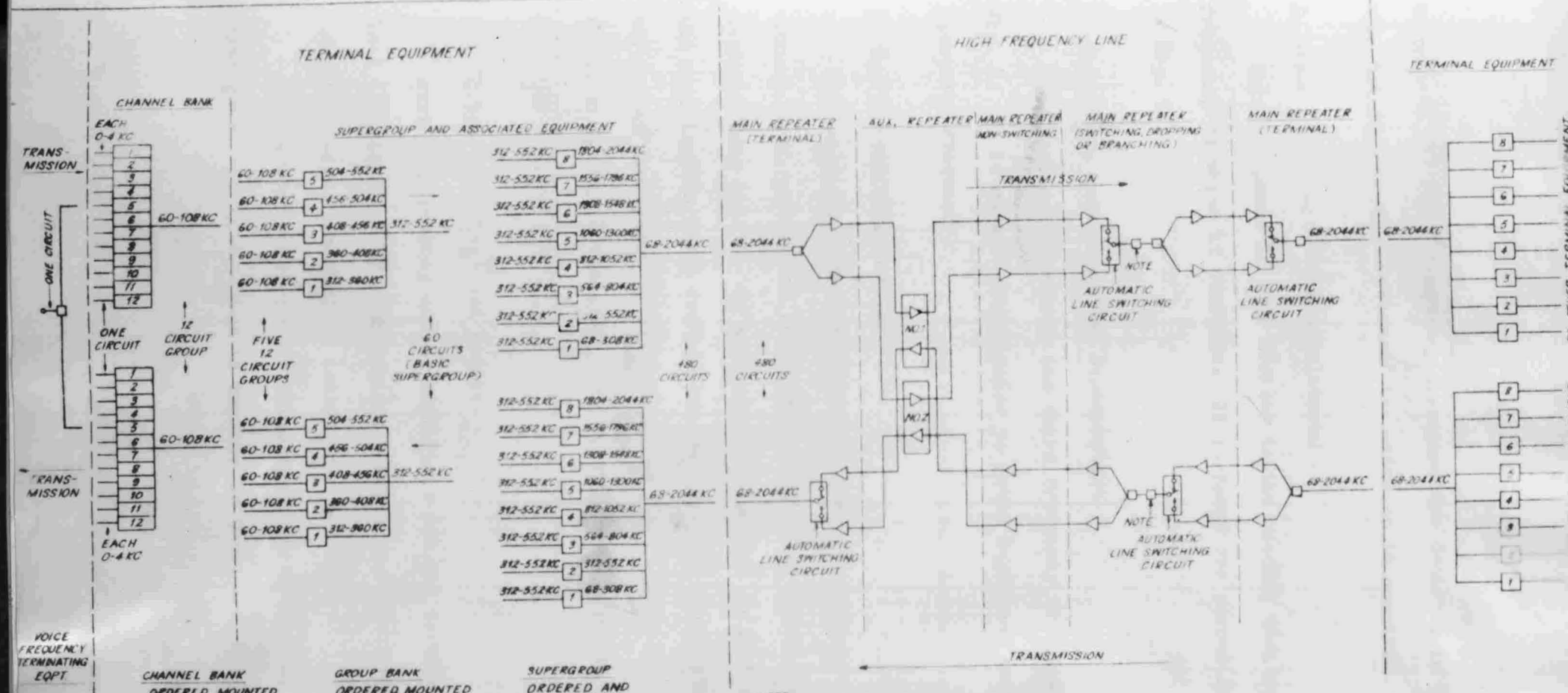

CHANNEL BANK

ORDERED, MOUNTED AND INSTALLED FOR GROUPS OF 12 CIRCUITS REQUIRES CARRIER SUPPLY FROM BASIC EQUIPMENT INSTALLED WITH SUPERGROUP

GROUP BANK

ORDERED, MOUNTED AND INSTALLED FOR FIVE 12-CHANNEL GROUPS. ONE SPARE GROUP BANK INSTALLED WITH THE FIRST AND FIFTH GROUP BANKS PROVIDED PER OFFICE

SUPERGROUP

ORDERED AND INSTALLED AS REQUIRED. EACH SUPERGROUP REQUIRES SPECIAL CARRIER FREQUENCIES EXCEPT SUPERGROUP 2 WHICH REQUIRES NONE. ONE GROUP BANK REQUIRED PER SUPERGROUP

NOTE

HIGH FREQUENCY LINE EQUIPMENT AND SWITCHING ARRANGEMENTS SHOWN ARE FOR FOUR COAXIALS. IF CIRCUITS ARE BRANCHED OR DROPPED AT AN INTERMEDIATE POINT, SWITCHING REPEATER IS REQUIRED AND BLOCKING FILTERS, HYBRID COILS AND TERMINAL EQUIPMENT ARE ADDED AT POINT INDICATED BY ARROWS. SWITCHING REPEATERS ARE REQUIRED NORMALLY EVERY 100-200 MILES, NON-SWITCHING REPEATERS ABOUT 50-75 MILES AND AUXILIARY REPEATERS ABOUT EVERY 5.4 MILES.

Fig. 2

GENERAL OVERALL SCHEMATIC OF TYPE L1 (3 MEGACYCLE) CARRIER TELEPHONE SYSTEM

to produce the first frequency transposition depicted in Fig. I. Here also the directional feature of transmission is acquired.

2. Group Modulators and Demodulators.

This equipment is very similar to the channel bank except for the frequency at which it performs. It performs the second frequency depicted by Fig. I.

3. Supergroup Modulators and Demodulators.

This equipment performs the third frequency transposition depicted by Fig. I. It is essentially similar to group equipment except for the operating frequency.

4. Carrier and Pilot Supply

This equipment produces the modulating frequencies fed into the channel bank, group, and supergroup equipment. These frequencies are apparent from Fig. I. In addition it generates "pilot" frequencies. As the name implies these frequencies are used for controlling the gain throughout the length of the system and for testing the system performance. As shown by Fig. I there are four pilot frequencies, 64 KC, 556 KC, 2064 KC, and 3096 Kc.

5. Office Amplifiers and Panels.

Strictly speaking office amplifiers are not terminal equipments. They are also used at intermediate points. However they must be used at terminals also, hence their inclusion.

Office amplifiers are of three types; transmitting, receiving, and flat gain. Their function is implied by their names.

The transmitting amplifier is used at terminals to put the carrier frequencies from the supergroup modulators on the coxial line with sufficient strength to reach the first repeater. The gain characteristic cannot be altered during their installation.

Receiving amplifiers are used at terminals to select the incoming carrier signals from the coaxial line and deliver them, amplified, to the supergroup demodulators. The gain characteristic of these amplifiers may be altered by a regulator.

Flat gain amplifiers have a flat gain characteristic over the carrier band. Generally they are used to increase the gain of line frequencies by a value lost while being transferred from or through a loss component. They are used in the receiving lines at terminals. There is no provision made for gain control of this amplifier.

Panels are units in which an amplifier performs its function of amplification. A panel unit however consists of power supplies, pilot indicators, alarm circuits, power separation filters, building out networks, equalizers, and other minor components in addition to amplifiers. Panels are basic arrangements of the above equipments installed at terminals and intermediate points between terminals. Office and line amplifiers are treated more completely in a separate chapter.

COAXIAL CABLE

The coaxial cable presently installed is of three types characterized by the inside dimensions of its outer conductor. The oldest type is .275 inch with hard rubber beads for center conductor support. A more recent type is a .275 inch with poly-ethylene beads. The most modern type is

.375 inch with poly-ethylene beeds. The appendix gives the characteristics of the latter type.

The attenuation loss is approximately proportional to $\sqrt{f}$ where f is the frequency; at 2000 KC this attenuation is about 8 db per mile. Design specifications call for cables to be 99.5% underground to prevent large loss variations due to temperature changes.

The coaxials are placed 2, 4, 6, or 8 in a lead sheathed cable. Nineteen or twenty-two gauge pairs are included for alarm circuits and local order wires. Regular pairs for short haul communication are sometimes wound about the inner core of coaxials.

REPEATERS

1. Line; Switching, and Non-Switching Main Repeaters.

Repeaters may be grouped into three functional categories, (a) line or auxiliary repeaters (generally referred to as "aux" repeaters), (b) switching main repeaters, and non-switching main repeaters.

"Aux" repeaters are spaced at intervals of 5½ miles to 8 miles depending on the type of cable installed. As many as ten "aux" repeaters may be connected in tandem by coaxial line. These repeaters are insertion gain devices employing line or "aux" amplifiers in a line or "aux" panel.

Switching main repeaters employ office amplifiers in office panels; an additional function of switching carrier frequencies from one coaxial line to another is performed at this repeater. Power supplies for one half the preceding "aux" repeaters are installed at this point.

Non-switching main repeaters are identical with switching main re-

peaters except that the switching provisions of the latter are not available.

Provision for dropping circuits may be installed at switching and non-switching main repeaters.

2. Regulators

Regulators are devices which have a pilot frequency input and a 2000 cycle output which supplies a negative resistance element in amplifiers and equalizers to control the gain and loss of the respective units.

3. Equalizers.

Equalizers are passive loss devices which by means of variable impedances standardize the overall gain of a repeater or of a section of line. One type of equalizer has a fixed loss.

For telephone communications gain equalization is of paramount importance in reducing amplitude distortion over long lines. For television transmission gain and phase equalization acquire equal degrees of importance.

4. Pilot Indicators and Alarms.

Pilot Indicators have pilot frequency inputs. They are used at main repeaters to measure the performance of the transmission system.

Alarm circuits serve as automatic warning devices indicating failure of the transmission system.

POWER SUPPLY

1. Power Supply Circuit.

The power supply circuit consists of a 60 cycle source of power with a standby supply of batteries for inversion.

2. Power Separation Filters.

Power separation filters are used at the input and output of repeaters and terminals to separate into appropriate channels the carrier frequencies and the power frequency.

3. Rectifier Inverter

The rectifier inverter is used as a standby unti to convert battery power into 60 cycle alternating current.

4. Loading Components

Loading coils and condensers are used to produce a constant current source of alternating voltage at the repeaters.

CHAPTER II

CHANNEL BANKS AND V. F. TERMINATION (GENERAL)

This section describes the channel banks and voice frequency terminating units of the L1 system. With this equipment the first frequency transposition is made. The equipment installations are of two types called A1 and A2. The channel banks are common to J, K, and L type carrier systems. The A2 system, the more modern of the two, will be described. Essential differences occur in the compactness of units.

VOICE FREQUENCY TERMINATING CIRCUIT

The circuit used for short haul telephone transmission lines usually consists of a single two-wire line or os two 2 wire lines; the latter being used for directional transmission. Either connection may be made to the channel banks. The most common connection is the two wire line which will be assumed to be the connection used for the purposes of this description. Figure (3.) is a block schematic of the entire channel bank with the terminating circuit shown to the left. The two wire subscriber line is shown at the extreme left. The arrangement of five coils at the left-center of the diagram represents a hybrid coil. It is essentially a 3 winding balanced transformer which will transmit in one of two directions but not in the third.*

For signals originating on the two wire line, the energy travels up and also into the compensating or precision net. For signals originating in the receiving circuit below, transmission is to the left and right. For perfect performance the impedance looking in all four directions from

* See Everitt; "Communications Engineering"

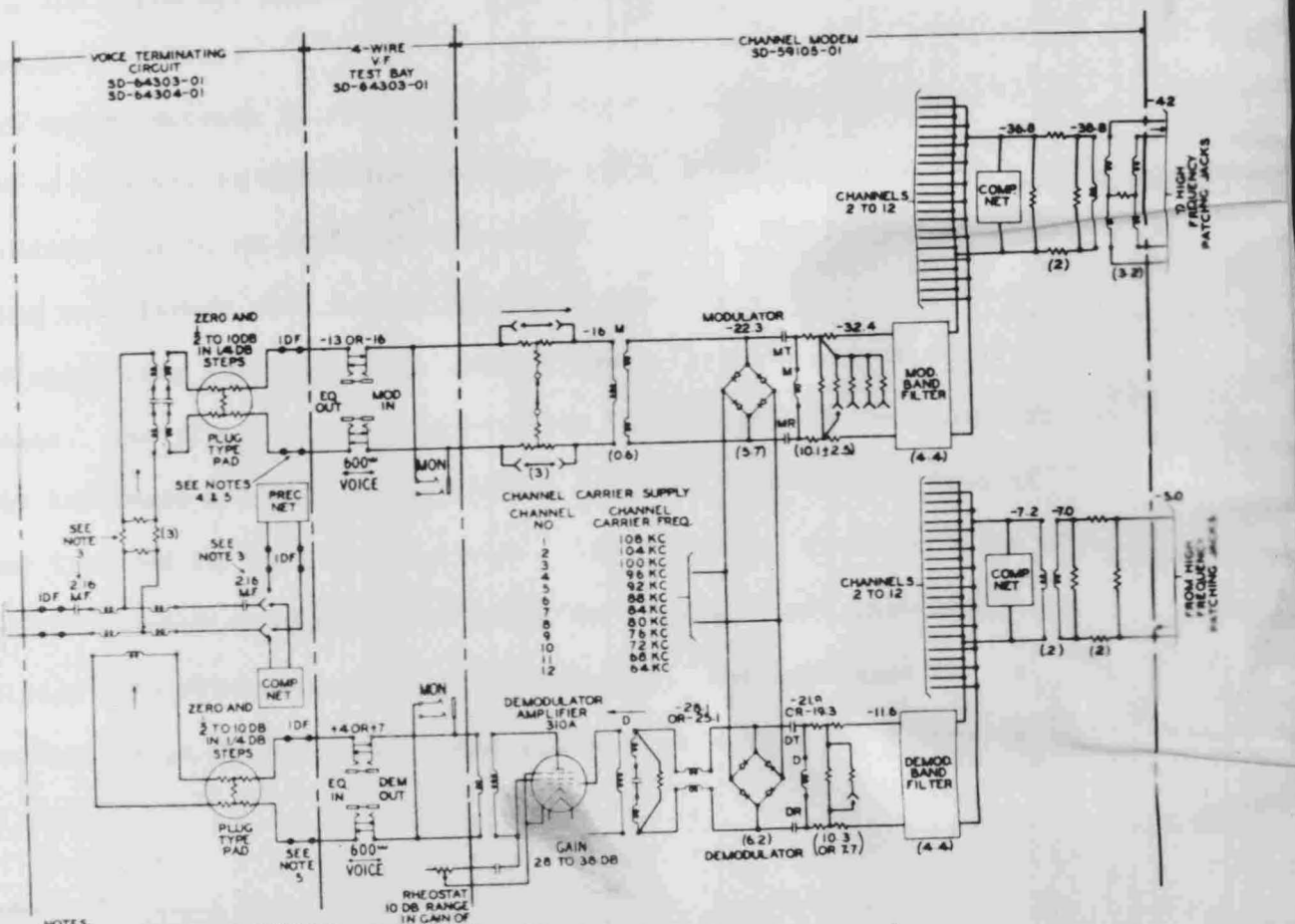

Fig. 3 - Channel Schematic - A2 Bank

the hybrid coil must be identical. Half of the energy present in the original transmission is lost in the precision or compensating network regardless of the originating circuit. The 2.16 mf condenser is a dc blocking and impedance matching device necessary for the connection to switchboard equipment.

The square network of resistances in the transmitting path constitutes a loss or, in telephone language, pad. It is placed in the transmission side as an impedance match to the line. The following isolating transformer also serves as a high pass filter to discriminate against signalling and switchhook interference. It cuts off at about 200 cycles. The plug type pad connected to the transformer secondary is used for impedance matching and amplitude control. The same is true of the plug type pad in the receiving side. The frequency characteristic of the voice frequency terminating set with the precision net installed is essentially flat from 200 cycles to 4000 cycles. The impedance of the terminating set is nominally 600 ohms viewed from either the 2 wire or 4 wire sides.

FOUR WIRE V. F. TEST BAY

This bay is connected as shown by Figure (3.) to the 4 wire voice frequency terminating set. It provides jacks for testing and monitoring purposes. It also includes a remote gain control for the receiving amplifier.

CHANNEL MODEM

I. MODULATOR

"Modem" is the term used to signify modulator and demodulator. The

input pad to the modulator may be strapped out if it is found necessary to increase the level at the output of the modulator. It adds about 3 db of loss when inserted. The transformer connecting to the modulator proper serves as a low pass filter to block carrier sidebands out of the voice circuit, therefore presenting a high impedance to carrier sidebands which helps the modulator perform more efficiently.

The carrier frequency appearing in the output of the modulator is designed to be down 26 dbm.* Normally it is considerably less than this value. The amount it is down depends on the degree of balance achieved in the modulator elements.

The pad at the output of the modulator may be adjusted over a range of 10 to 2.5 db to permit the 12 channels to be brought to the same level. Its major function, however, is to present a good impedance to the band filter following. Although it is not shown by Figure (3.) grounds are connected at the midpoint of the shunt element of the pad and also to the center tap of the output transformer. The grounds are necessary for the proper operation of the balanced crystal filter labeled "Mod. Band Filter."

A half section filter composed of the MT and MR condensers and the M coil presents a high impedance to voice frequencies.

The band filter is a crystal filter of lattice structure with extremely sharp attenuation at unwanted frequencies. The characteristic of the two types of filter used and their structure is shown by Figure(4.). The filter selects the lower sideband of the modulator output. The output of the 12 channel modulators are paralleled and fed into the net side of a hybrid coil which acts to transform the impedance to 135 ohms. A compensating network is used to correct for poor impedance at the extreme

* 26 below 1 milliwatt

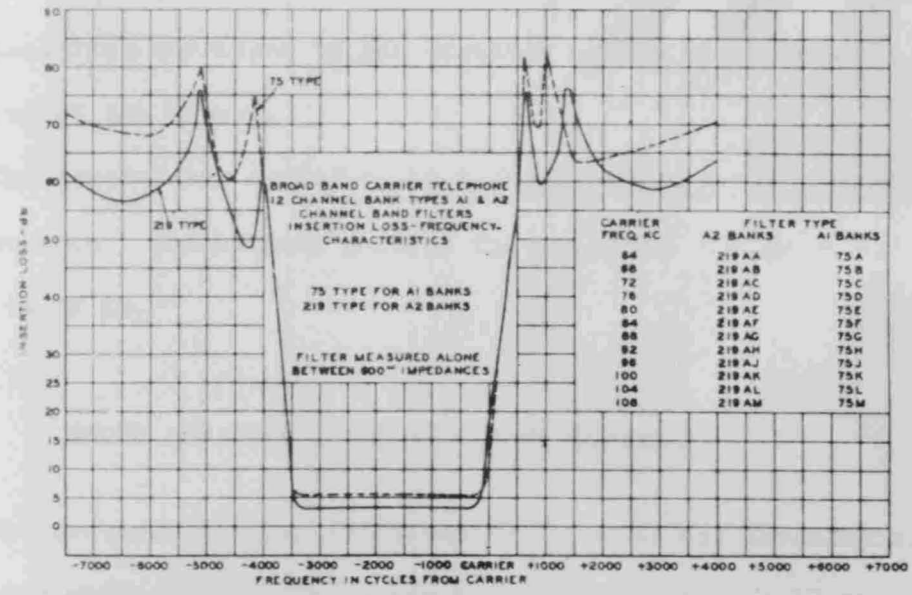

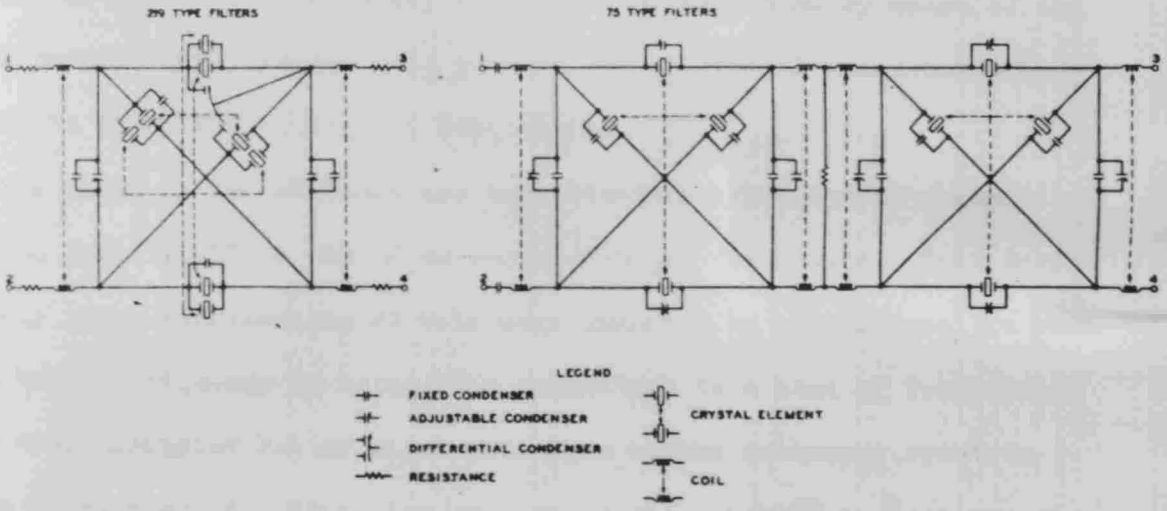

Fig. 4 - Loss Frequency Characteristics and Circuit Schematics of 75 and 219 Type Band Filters

ends of the 60 KC to 108 KC frequency band output.

II. Demodulator

The modulator and demodulator use the same carrier frequency and are identical from the input to the variator bridge to the paralleled connections at the output.

The demodulator amplifier is a feedback amplifier having a single stage and one tube. The overall gain of the amplifier may be varied from about 28 db to 38 db.

GROUP AND SUPERGROUP EQUIPMENT (GENERAL)

The previous chapter explained the process for translating 12 voice frequency channels to a frequency band of 60 KC to 108 KC by means of the channel bands. This chapter will explain two additional frequency translations, to group and supergroup frequencies.

Five 60 KC to 108 KC bands are translated in frequency to a band extending from 312 KC to 552 KC by means of group modulators. This basic frequency group representing 60 telephone channels or subscribers is next translated in frequency by supergroup modulators to a band of frequencies 240 KC wide occupying one of eight positions in the frequency spectrum from 64 KC to 2044 KC. It is the purpose of this chapter to describe the group and supergroup modulators.

GROUP TERMINAL EQUIPMENT

Fig. 5 shows in schematic form the group modulator and demodulator circuit. It may be seen by comparison that this circuit corresponds with

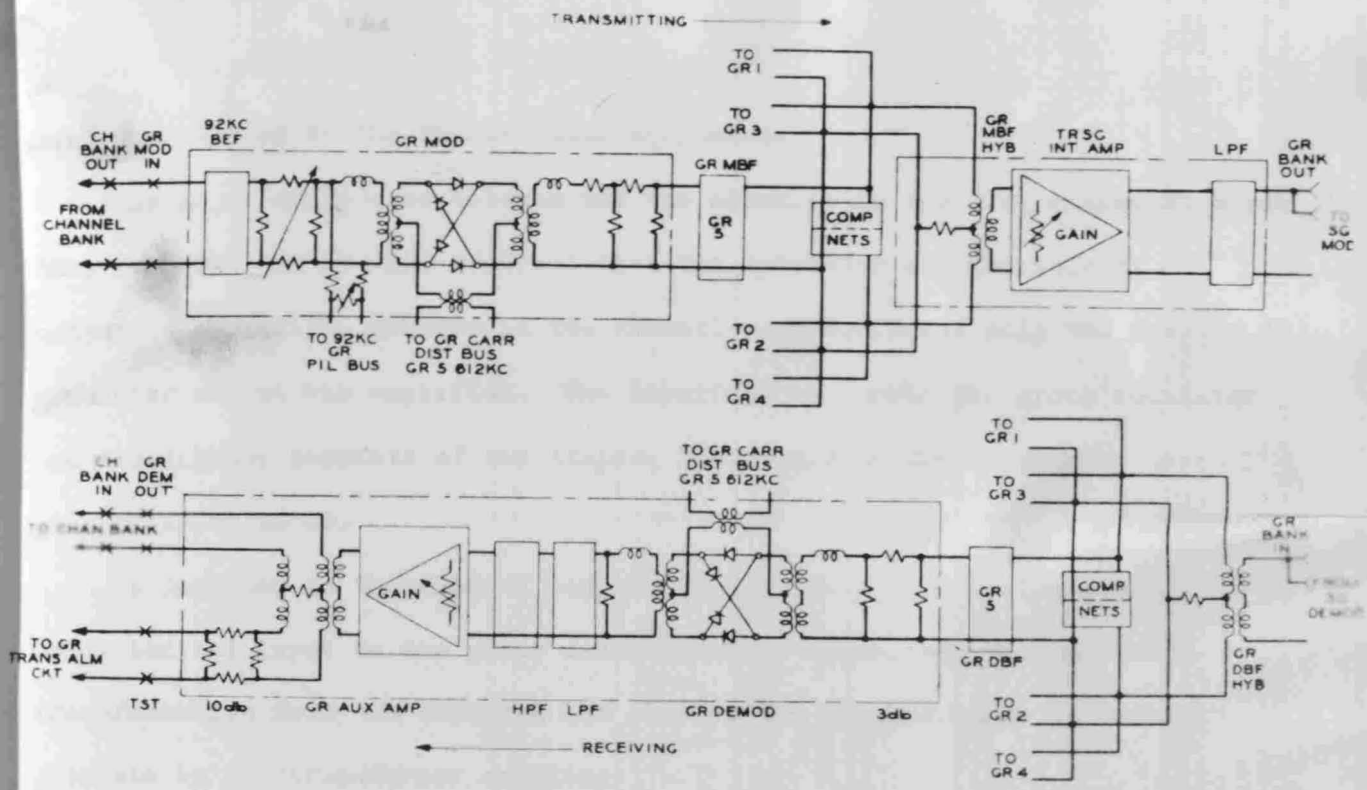

Fig. 5 - Group Terminal Equipment

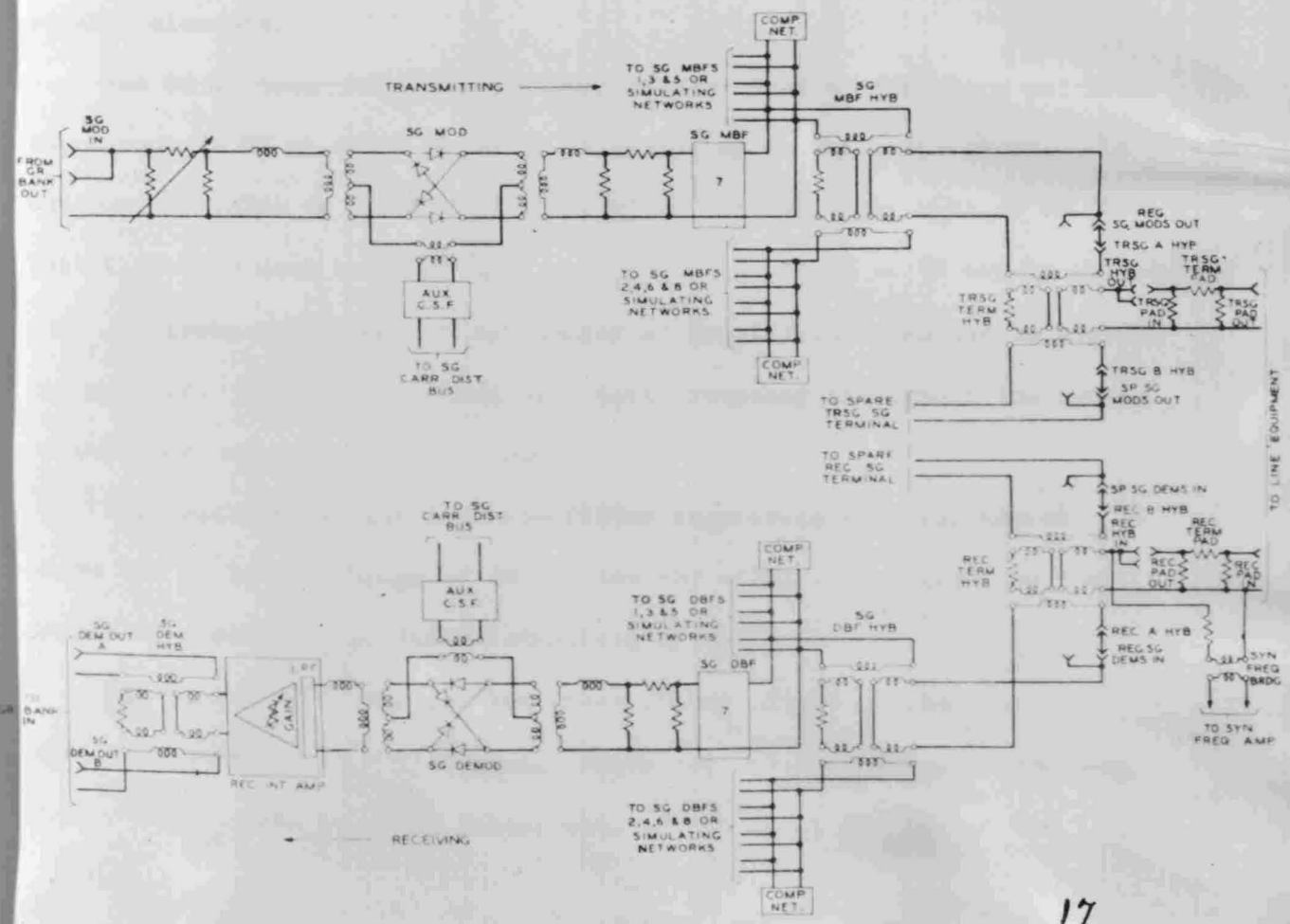

17

Fig. 6 - Supergroup Terminal Equipment

minor exceptions to the channel bank equipment.

The major difference between the two circuits is the frequencies at which they perform. It is also apparent that the modulator and demodulator output is amplified, whereas in the channel bank equipment only the demodulator output was amplified. The amplifier used with the group modulator and demodulator consists of two stages, feedback stabilized, with an overall gain of about 30 db.

In contrast to the channel bank equipment the output of the group modulator and input to the group demodulator is unbalanced 72 ohms. The transformation from the balanced 135 ohms of the channel banks is made possible by the transformer coupling.

The group modulator band filters at the output of the modulator and input to the demodulator are coil and condenser arrangements rather than crystal elements.

The 92 KC band elimination filter at the input to the group modulator suppresses 92 KC by about 38 to 58 db depending on the temperature. The attenuation falls to about 2 db at 60 to 70 cycles either side of 92 KC. This filter is used in order that a pilot frequency of 92 KC may be introduced into the group modulator without danger of pilot distortion due to signal frequencies. The 92 KC is used as a test frequency throughout the system to determine operating performance.

The modulator output low pass filter suppresses all frequencies above 600 KC by an average of 60 db, thereby eliminating noise and the danger of modulation products introduced by the amplifier.

The high pass filter and low plass filter of the demodulator are used to suppress fringe frequencies which are not eliminated by the band filter input. The low pass filter cuts off at about 200 KC and the

high pass filter at 54 KC. The input to the auxiliary amplifier is therefore essentially free of frequencies which could cause modulation products to appear in the output.

SUPERGROUP EQUIPMENT

The supergroup modulator and demodulator are essentially the same as the group equipment with the exception of the operating frequencies. The supergroup equipment is bilateral, a basic unit being supplied for both modulator and demodulator. The schematic is shown by Figure 6.

The carrier supply is filtered to prevent crosstalk and unwanted modulation products by a very selective coil-condenser filter. In general all components used for the supergroup band filters are coil-condenser networks.

Adjacent channels are not paralleled. Alternate channels however are paralleled and the two sets are combined in a hybrid coil. By this method of combination there is no interaction of impedances at the overlapping edges of the bands where the impedances of the band filters are not of the proper value.

Supergroup channel number 2 does not undergo any modulation but is placed directly onto the line after group modulation. Pads are inserted into the circuit to insure the proper output level to the line.

CHAPTER III

CARRIER AND PILOT SUPPLY (GENERAL)

Perhaps the most rigid performance requirements for any unit in the L1 system is placed on the carrier and pilot supply components. Reference to the frequency translations necessary indicates that a number of carrier frequencies must be provided. To prevent overlapping of bands and cross modulation, a very stable frequency source and highly selective filters are required.

This chapter describes the method of meeting these requirements and presents a simplified view of the circuits. Figure 7 gives and overall block diagram of the carrier and pilot supply. Details of the various blocks are covered in the following paragraphs.

4 KC FREQUENCY SUPPLY CIRCUIT

The method used to obtain carrier frequencies separated by 4 KC is to produce even and odd harmonics of a fundamental 4 KC signal in a harmonic generator. This necessitates the introduction of a 4 KC standard frequency. To achieve the necessary frequency stability a crystal circuit operated at 128 KC is utilized. The 4 KC fundamental is produced by successive frequency division. The circuit used for this function is shown by Figure 8.

The oscillator is a bridge stabilized design coupled to the grid and plate circuit of the tube by tuned transformers. Frequency variation of a minor degree is provided by the tapped inductance and variable capacitor CC. At the operating frequency the crystal network performs

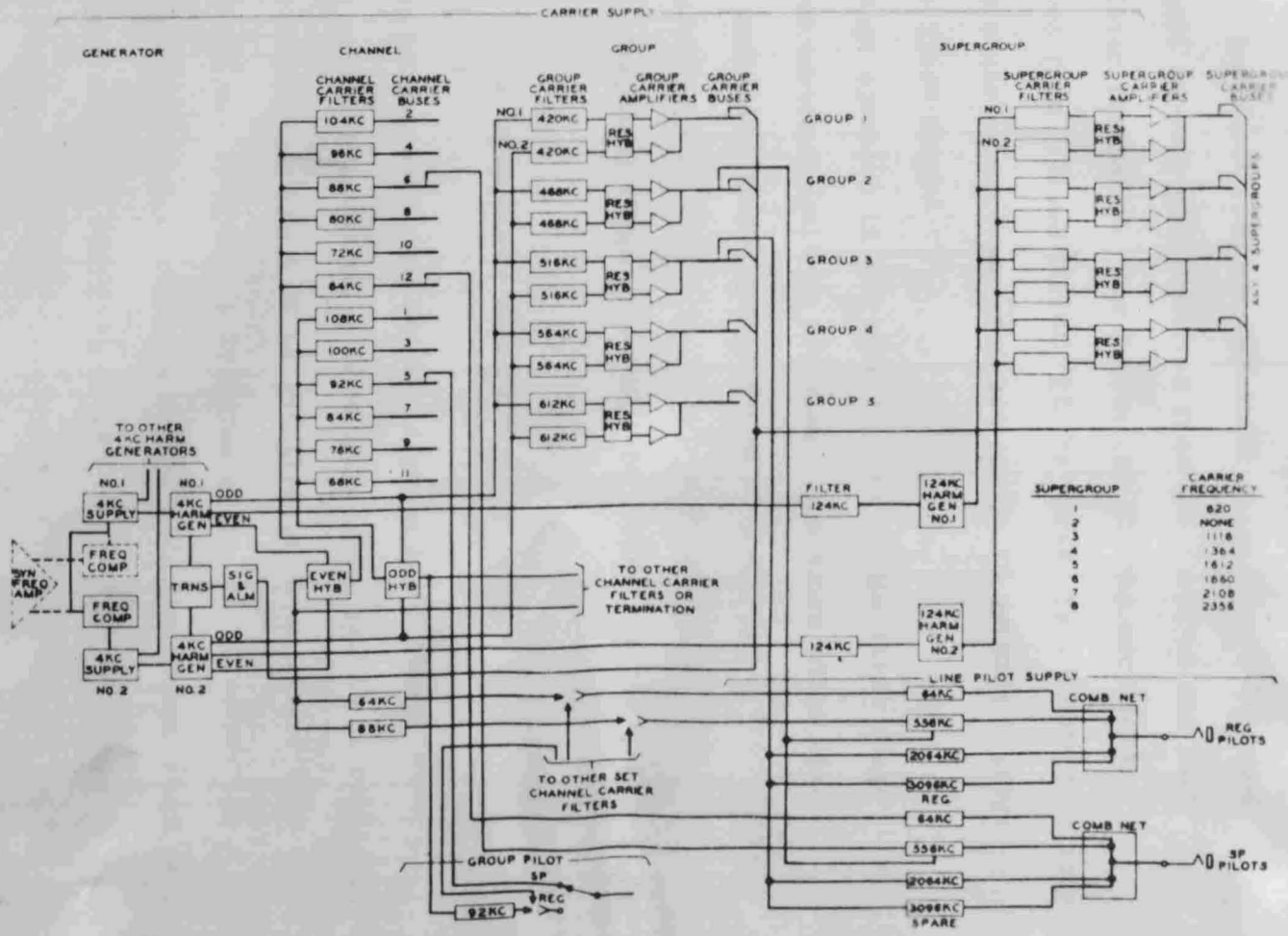

Fig. 7 - Block Schematic of the Carrier and Pilot Supply

as a resistance in one arm of the bridge. Amplitude adjustments are possible by a resistance tap in the opposite arm. The tungsten lamp operates to balance the bridge and stabilize the amplitude of oscillations.

The frequency division circuit achieves a division by 4, 4, and 2 in successive stages. The first frequency division stage uses a balanced modulator in the grid circuit with feedback from the plate at one half (64 KC) the oscillator frequency. One fourth (32 KC) the oscillator frequency is derived from a tuned circuit in the screen lead which modulates the 64 KC from the plate circuit and produces the 32 KC driving voltage at the grid of the first stage.

The second stage operates in the same fashion as the first stage except that a tuned screen circuit is not used. The third stage uses only one balanced modulator with plate feedback at ½ the input frequency.

The crystal frequency is stable to 1 part in 10 million. The condenser CC has a frequency range of about 1.28 cycles per second.

4 KC HARMONIC GENERATOR

The next step in producing the carrier signals is to obtain even and odd harmonics of the fundamental 4 KC supply. This result is realized by the circuit of Figure 9. The 4 KC is supplied to an amplifier tube which selects the no. 1 and no. 2, 4 KC supply by means of the transfer circuit (not shown). The first tube is a driver for the second stage of push-pull amplification. The push-pull stage is operated in an over-loaded condition to minimize output variations. A resistance (F) in the grid circuit prevents excessive grid current. Input and output trans-formers of the push-pull stage are tuned to 4 KC. Further selectivity

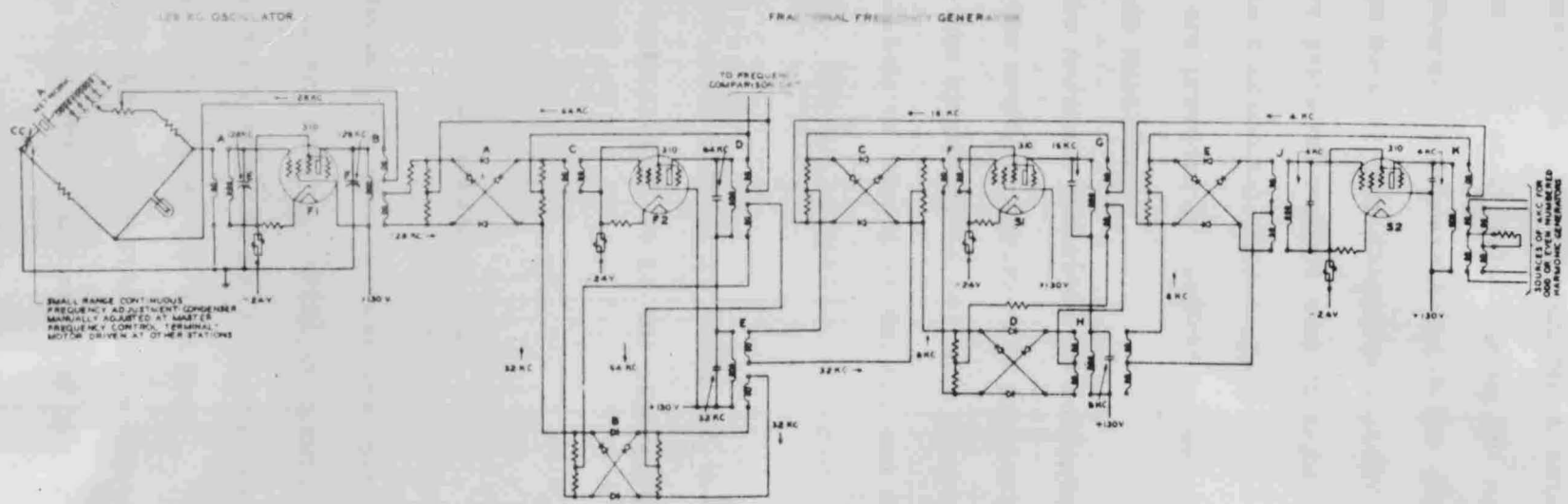

Fig. 8 - Schematic of the 4-kc Frequency Supply Circuit

is provided by the condensers A, B, and the coil A. Harmonics are produced by the saturable core reactor HP, which saturates very early in each half cycle of the 4 KC signal. During the normal operation of the saturable core reactor condensers A and B are charged. As soon as the reactor saturates however they discharge rapidly, thereby producing positive and negative peaks of current very rich in harmonics up to very high multiples of the fundamental frequency.

Even harmonics are produced by rectifying the alternate peaks in a full wave copper-oxide rectifier.

The output of the harmonic generator is connected to hybrid coils and thence to buses for carrier supply. The duplicate harmonic generator is also connected to the hybrid coils and that generator is selected which has the greatest amplitude of signal at 64, 88, and 92 KC, the other then being terminated. The two outputs of the hybrid coil each supply 120 channels.

The supply for the group carrier is taken off the odd harmonic output preceding the hybrid coil, as is the supergroup fundamental of 124 KC.

CHANNEL CARRIER FILTERS

The output of the odd and even hybrids are connected to separate buses. The carrier filters must therefore discriminate against frequencies 8 KC apart instead of 4 KC, which would have been the case had both odd and even outputs been connected to the same bus.

Average characteristics of the filters are depicted by the graph of Fig. 10. All filters fall within the range of the solid and dotted curves.

The arrangement of the filter is also shown. It is a lattice structure crystal filter.

The output of each filter is fed to a bus which contains 11 terminals, 10 for active channel carrier circuits and one for spare or pilot supply. Each tap is connected through 22 ohm resistances in each lead to prevent a direct short circuit of the bus due to shorted carrier taps.

GROUP CARRIER SUPPLY

As previously pointed out the group carrier supply is derived from the odd output of the harmonic generator. Each harmonic generator will supply 480 channel carriers and 5 group carriers. The group carrier output is paralleled to supply 3 other sets of 5 group carriers each.

The group filters are similar in design to the carrier filters, but to obtain a greater degree of discrimination two filter sections are used instead of one. The rejection at 4 KC to either side of the group frequency becomes 80 to 100 db instead of 55 db for the carrier frequency.

The same frequency outputs from the odd side of each harmonic generator are passed through separate filters and then connected to a resistance hybrid to two amplifiers. The amplifier outputs are connected in parallel. A pad providing variable loss in steps of .5 db up to 3.5 db is placed in the filter output being greater.

Although it is not evident from the block schematic, the transfer circuit labeled TRNS controls the bias on the grids of the input amplifiers to the harmonic generators. The grid circuit of one input amplifier is connected to ground by the transfer circuit while the input grid of the other harmonic generator is held at -24 volts, thereby holding the latter

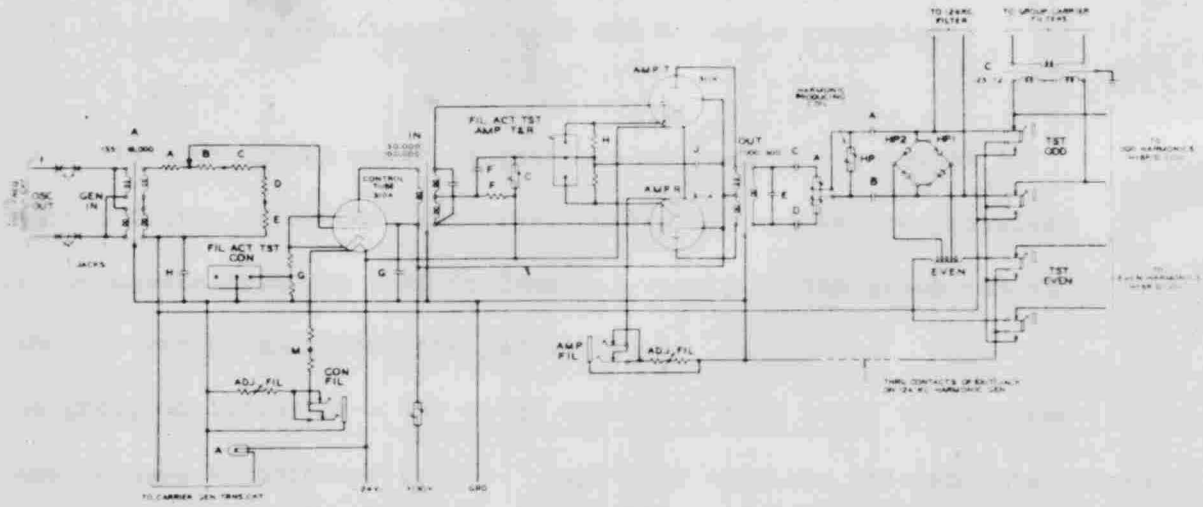

Fig. 9 - Schematic of the 4-kc Harmonic Generator

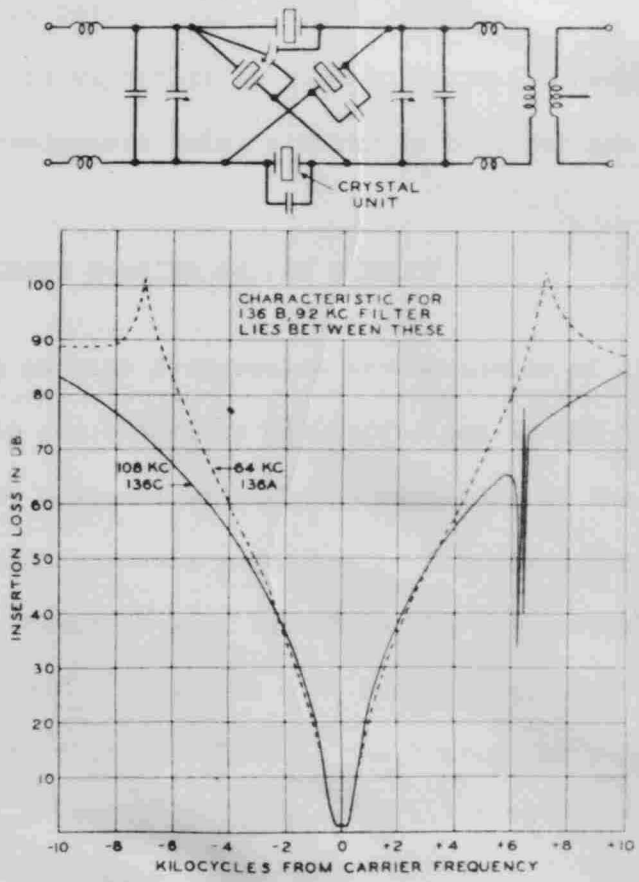

Fig. 10 - Schematic and Typical Insertion Loss Characteristics of the Channel Carrier Supply Filters -

amplifier inoperative. Consequently only one harmonic generator operates at a time.

The resistance hybrid makes it possible to connect the output of either group filter to either amplifier. Therefore spares are provided for all components from the 4 KC fundamental supply to the group output where the two group amplifiers are paralleled.

The group amplifier is a two stage amplifier with tuned transformer input and untuned transformer output. Impedance coupling between interstages is used; a variable tap inductance provides the proper impedance at different group frequencies. Feedback from the second stage plate to the first stage cathode is provided for stability. A gain control provides about 14 db variation in gain. Local feedback is supplied by unbypassed cathode impedances in both stages.

The output of the amplifier is tapped to buses through 60 ohm resistances; the arrangement being similar to that for the carrier supply.

SUPERGROUP CARRIER SUPPLY CIRCUIT

The supergroup carrier frequencies are harmonics of 124 KC. The output of the 4 KC harmonic generators is not sufficient at the higher order of harmonics to produce a signal of suitable amplitude at the frequencies required. An additional harmonic generator is therefore utilized to produce the higher order frequencies with 124 KC as the fundamental. The 124 KC is derived from the odd side of the 4 KC harmonic generators by passing it through a 125 KC band filter similar to those used for carrier and group supplies. The filter has an attenuation of about 95 db at 124 KC $\pm$ 4 KC. The loss at 124 KC is about 6 db.

A single stage harmonic generator is used with paralleled tubes. An output filter is used to preserve the purity of the 124 KC signal which is then impressed on a saturable core reactor similar to that used in the 4 KC harmonic generator. The output therefore contains odd harmonics of 124 KC. This putput is connected to the supergroup filters. These filters are designed to be connected to 72 ohm unbalanced circuits and are consequently single sided whereas the carrier and group filters are symmetrical and balanced to ground. The attenuation of the supergroup filters is approximately 5 db at the supergroup carrier frequency and about 50 db at the carrier frequency $\pm$ 124 KC.

The supergroup amplifiers consist of two stages of fixed gain. Impedance coupling and negative feedback is used. The overall gain is about 30 db. Output and input untuned transformers are used for coupling.

The output of the amplifier is connected to buses through 30 ohm resistance in each bus lead.

SYNCHRONIZING FREQUENCY AMPLIFIER AND COMPARISON CIRCUIT

All carrier frequencies in the L1 system are synchronized to the master office which is located arbitrarily. The synchronizing frequency is chosen as 64 KC. This frequency is taken from the line by means of a high impedance shunt and a 64 KC pickoff filter. The pickoff filter is a single crystal unit shunted across the output of a transformer. It supplies two stages of negative feedback amplification of nominal 54.5 db gain and produces an output of 13.5 dbm at the input of the frequency comparison circuit. A gain adjustment of 13 db range is provided.

A schematic diagram of the frequency comparison circuit is shown in Figure 11. The output of the synchronizing amplifier is connected through transformer B to a resistance capacity bridge. The center tap of transformer B is connected to the high side of transformer A which supplies 64 KC input from the 1st. frequency division stage of the local 4 KC supply. Each common point of the bridge is connected to the grid of a separate tube, thereby producing voltages which have 90° phase difference from the grid of the first to fourth tube. The connection from the high side of transformer A to the center tap of transformer B changes the phase on all grids by the same amount. The plates of the four tubes each connect to one winding of a 4 phase motor.

If the signals coming into the A and B transformers are equal then the voltages on the motor windings remain stationary in phase and amplitude with each other, and no torque is produced. If, however, a difference in frequency exists, the signal amplitudes on the grids of the tubes will be different; and a rotation of the vectors at the frequency difference of the two signals will occur, thereby producing motor torque. The direction of torque depends on whether the standard frequency is above or below the local frequency. The motor is geared to drive the condenser CC in the 128 KC oscillator circuit to correct for the frequency difference.

EMERGENCY PROVISIONS

Duplicate 4 KC frequency supply, 4 KC harmonic generators, 124 KC harmonic generators and group and supergroup carrier supply filters and amplifiers are provided. Either system, labeled no. 1 or no. 2, may be used to supply the carriers continuously. An automatic or manual transfer

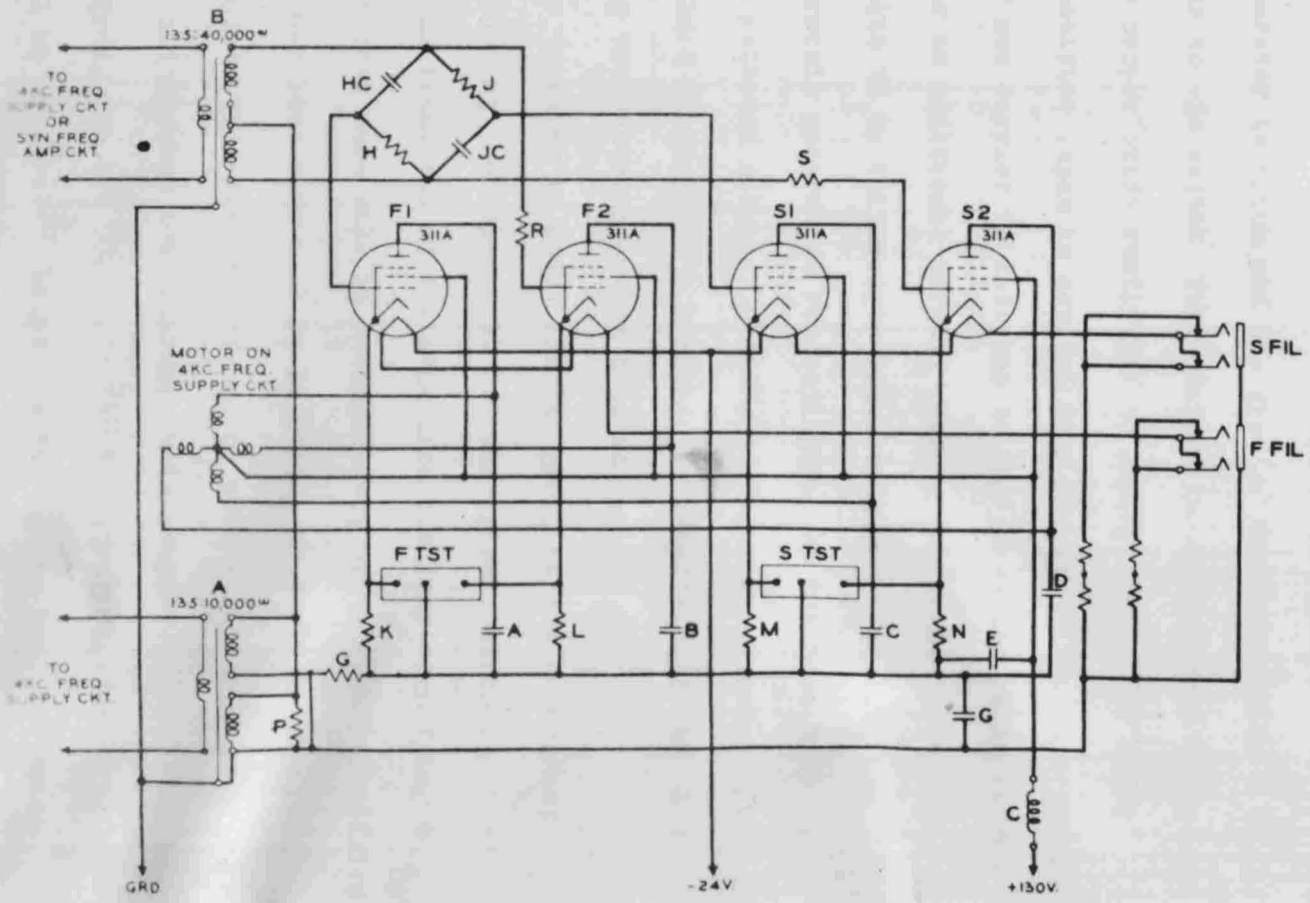

Fig. 11 - Schematic of the Frequency Comparison Circuit

may be made in case of failure of the working unit.

CARRIER GENERATOR TRANSFER AND ALARM CIRCUITS

The carrier transfer circuit acts to connect the grid of the working 4 KC harmonic generator to groun and the grid of the non-working 4 KC harmonic generator to -24 volts. This feature is accomplished by connecting full wave copper oxide rectifiers to supply current to relay windings. The rectifier input is derived from the group and supergroup carriers. If any one carrier is lost due to any cause the relay is released which opens an additional circuit causing the connections of ground and -24 volts to be switched to previously non-operating and operating 4 KC harmonic generators respectively. At the same time the relay contacts so released causes the operation of a third relay which signals a minor alarm by means of a buzzer. A transfer light is also lighted signifying that a transfer has been made.

If, after the transfer is made, all the group or the supergroup carriers are not working the relay will be reenergized, switching back to the original condition; and at the same time the lamp signifying a transfer as having been made will be extinguished, and a light signifying a double transfer has been made will be lighted. No further transfer is made after a double transfer; but if one or more group or supergroup carriers is still not working the minor alarm is sounded. If all of either the group or supergroup are not working after a double transfer, a major alarm circuit will be energized. Lights on the panels indicate which group or supergroup is not working.

A transfer circuit is provided for each pair of 4 KC harmonic generators. The non-working 4 KC harmonic generator may be energized for test purposes by terminating the odd and even outputs of the harmonic generator and the output of the 124 KC harmonic generator.

PILOT FREQUENCY SUPPLY CIRCUITS

The four line pilot frequencies, 64 KC, 556 KC, 2064 KC, and 3096 KC, are normally derived from the carrier buses. They may also be taken from the net side of the hybrid coils.

The 64 KC pilot is taken directly from the carrier bus or hybrid net and converted from a 125 ohm balanced circuit to a 72 ohm unbalanced circuit by a transformer. Continuously variable pads up to 8.5 db may be used to regulate the output. A low pass filter is used to suppress unwanted harmonics.

The 556 KC pilot is derived from a balanced copper oxide modulator by using the 468 KC group and the 88 KC channel carrier. A 556 KC band pass filter selects the upper side band and provides suppression of other modulation products. The output level is controlled by a pad similar to that used in the 64 KC circuit.

The 2064 KC and 3096 KC pilots are derived from the modulation products produced in a full wave copper oxide rectifier by the 516 KC group carrier. Low pass filters are used at the input and band pass filters at the output. Output pads similar to those used in the 64 KC circuit are provided. Variable input pads are also provided for proper output level.

The output level of all pilots is adjusted to -54 dbm into 72 ohms. All circuits are converted by transformers from 125 ohm balanced to 72 ohm unblanced . All outputs are combined in a combining network which has 72 ohm impedance.

CHAPTER IV

LINE ARRANGEMENTS FOR L1 CARRIER (GENERAL)

As mentioned in Chapter I there are four types of L1 amplifiers. Each of these amplifiers is designed to perform a specific function in the system. Depending on the location, the amplifiers are known as office amplifiers or line amplifiers. Office amplifiers are of three models, receiving, transmitting, and flat gain; whereas the auxiliary amplifier is the only model of line amplifier. As indicated by the notation, office amplifiers are located at major intervals along the line, while line amplifiers are located at average intervals of 5.25 miles, 5.45 miles, or 7.9 miles depending on the type of coaxial cable used and the topography.

LINE ARRANGEMENTS FOR OFFICE AMPLIFIERS

Office amplifiers are located at switching main stations, non-switching main stations, and at terminals. A switching main station is a station which provides a means for changing the carrier frequency circuit from one coaxial which is ordinarily used to one which is ordinarily maintained as a spare. In addition it may be arranged for terminal equipment to be installed at a switching main station in order that messages may be sent and received from such a location. These terminal equipments are known as "drop" points. In general a switching station is located in existing telephone buildings and is an attended station.

A non-switching main station is similar to a switching station except that it does not provide switching facilities; and in general it is not used as a drop point. It may be unattended.

Each of the three stations noted above serves as a primary source of 60 cycle power for the auxiliary repeater stations located in either direction from it.

Switching stations are separated from each other by from 100 to 200 miles. Non-switching stations are separated from each other by from 40 to 80 miles, and terminal stations are separated from each other by various distances depending on the geography and demand for long-distance service.

Fig. 12 shows the arrangement of office amplifiers at a terminal station. The transmitted carrier frequencies are fed into the hybrid coil at the HYB IN jack and are sent in two directions, the circuits of which are identical. The HYB IN jack may be found in the upper left corner of the figure. From the two HYB OUT jacks the circuit is through a transmitting amplifier, pilot indicators, building out networks, and output power separation filter to the coaxial line. It may be seen from this diagram that it can not be predicted at the terminal station which coaxial line is the working line and which is the spare line. The selection of the working line is made at the first switching station following the terminal. It should be noted also that the pilot frequencies are fed into the net jack of the hybrid coil and are present at all times with the carrier frequencies.

Sixty cycle power for the transmitting amplifier is supplied locally. The output power separation filter is used to supply 60 cycle power to following line repeaters.

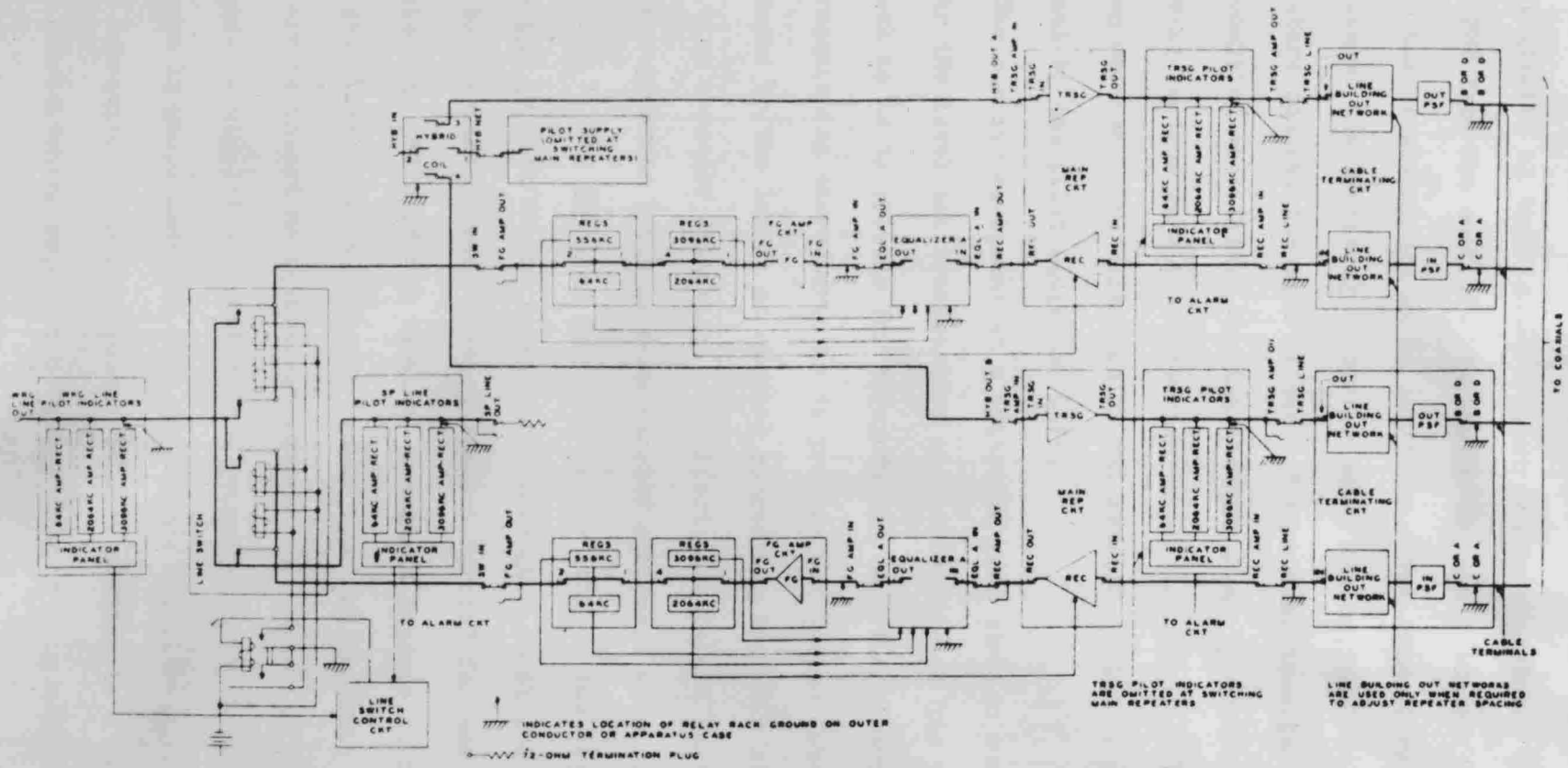

Fig. 12 - Block Schematic of a Terminal Repeater, or, with the Omissions Indicated, of One-half a Switching Main Repeater

The receiving line may best be followed at the bottom of the page beginning at the right. Carrier frequencies enter at the input PSF from the coaxial. It may be seen that all of the regulators follow the receiving and F. G. amplifier. The 2064 KC regulator controls the gain of the receiving amplifier while the 64,556, and 3096 KC regulators control the loss of the "A" equalizer immediately following the receiving amplifier. For the instant shown by the figure the lower receiving section is a spare section while the upper section is the working section. The selection of the receiving line is made at the terminal by the pilot indicator unit.

The carrier equipment at a switching main station must first recover the level and transmission characteristic of the sending terminal so as to provide for "drops". It must then introduce a level and transmission characteristic to provide for losses subsequently introduced by the length of coaxial connecting the main station to the first line repeater following. In effect therefore a switching main station represents twice as much carrier equipment as a terminal station. In Fig. 12 if the WKG Line Out jack at the left of the figure was patched to the HYB IN jack at the upper left, through a 40 db pad the result would be a switching main station without "drops" for one direction of transmission. "Drops" and terminal equipment produce an insertion loss of 40 db. Therefore to keep the proper level of transmission it is necessary to insert an equivalent passive loss where no "drops" are provided. A simplified drawing of a switching main station is shown by Figure 13 which does not show regulators and pilot indicators.

A non-switching main repeater is very similar to a switching station. In the non-switching repeater however the flat gain amplifier and the

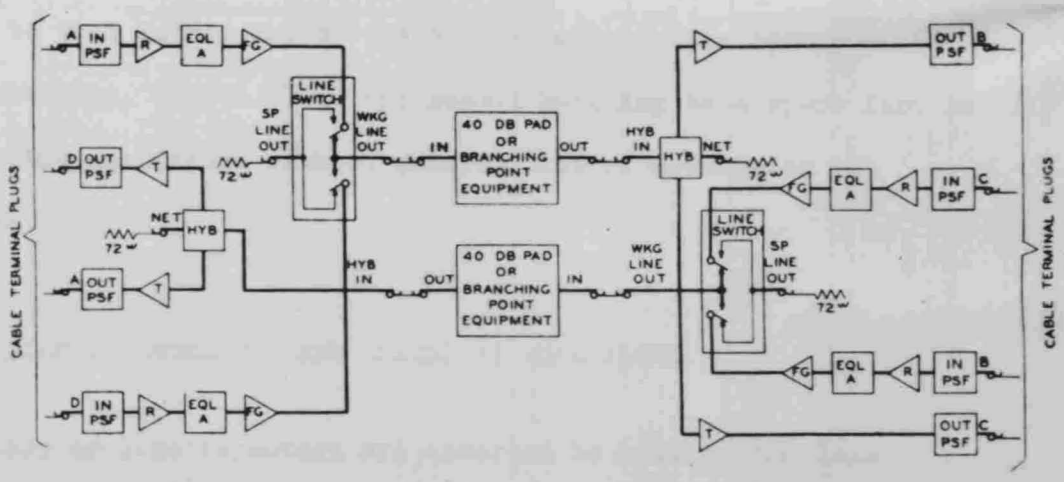

Fig. 13 - Block Diagram Showing Connections at a Switching Main Repeater

40 db pad are eliminated. The coaxial therefore feeds into the tandem arrangement of an, In PSF, Receiving amplifier, A Equalizer, Hybrid Coil, Transmitting amplifier, Out PSF, to the coaxial. The receiving amplifier is controlled by a 2064 KC regulator with its input taken from the output of the receiving amplifier. The 64 KC, 556 KC, and 3096 KC regulators may or may not be used to control the loss of equalizer A depending on conditions present. The hybrid coil is not absolutely essential but is placed in the circuit to produce a loss equivalent to that introduced by the hybrid coils in the terminal and switching stations, and to allow for manual patching to a spare line in case of trouble conditions without interruption of service on the working line.

LINE ARRANGEMENTS FOR AUXILIARY AMPLIFIERS

Auxiliary or line repeaters are inserted to nullify the loss inherent in the preceding length of coaxial. Regulators operating at 2064 KC, or a manual control unit, govern the insertion gain of these devices. They are unattended stations located in huts or in manholes.

PANELS

All amplifiers are installed in a panel. The panel consists of two upright members 19 inches apart to which a solid metal plate is fastened by machine screws. The metal plate is fitted with hardware and wiring to accomodate the units which are either plugged into sockets or are permanently attached. The plug in and permanently

attached units protrude on the face of the panel. All jacks and hardware is contained on the back of the steel plate.

Permanently attached units consist of long life units such as power transformers, condensers, and filters. Fig. 14 shows the face of an auxiliary repeater panel. The units shown in solid outline are permanent components of the panel; those in dotted outline are replaceable plug in units. A panel serves two coaxial lines, one for each direction of transmission. A 6 coaxial cable therefore would require 3 auxiliary repeater panels.

Panels are also provided for main repeaters. One main repeater panel will provide for the installation of one receiving and one transmitting amplifier.

A flat gain amplifier panel is also available. It provides for the installation of two flat gain amplifiers.

Several accessory units are necessary at main stations in addition to amplifier panels. These accessory units are mounted individually between the upright supports and fastened by means of machine screws.

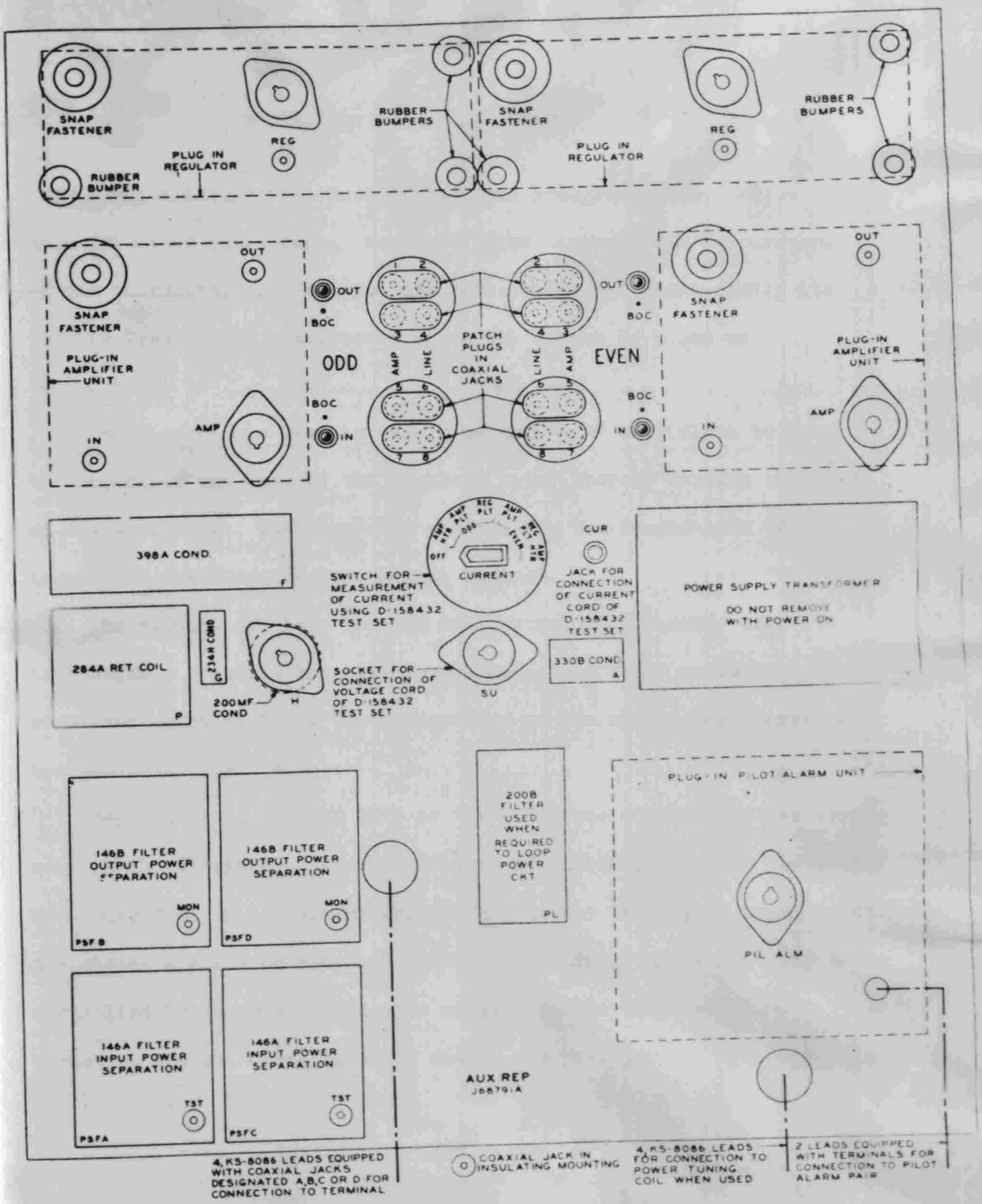

Fig. 14 - Face of Auxiliary Repeater Panel

CHAPTER V

REGULATORS (GENERAL)

A "thermistor" is a device which has a negative temperature coefficient of resistance. Any unit which controls the temperature of the thermistor will control its resistance, and consequently its passive loss. Such a temperature control device is known as a "regulator."

Thermistors are used in receiving and "aux" amplifiers to vary the impedance and loss of the feedback path, thereby varying the gain of the amplifier. The regulator controlling the temperature of the thermistor therefore becomes a gain control.

Thermistors are also used in conjunction with passive elements to provide a variable loss and impedance across fixed networks. The regulator which controls the temperature of the thermistor therefore becomes a loss control.

Regulators to perform both of the functions described above are used in the L1 system. The temperature of the thermistor is controlled by application of electrical energy to a heater winding adjacent to the thermistor element or "bead." The heater winding temperature may be controlled by an automatic device or by a device which supplies a fixed amount of energy. Both types of device are used in the L1 system.

MANUAL GAIN CONTROL UNIT

The "Manual Gain Control Unit" (MGCU) is that type of regulator

which supplies a fixed amount of energy to the heater winding of a thermistor. The amount of energy supplied by the MGCU is controlled by a screw-driver adjustment. The adjustment may be made at all times under operating conditions.

The MGCU is only used as a volume control of "aux" amplifiers. It is a plug in unit which is installed to replace the two dynamic regulators shown by Fig. 15.

When installed, it controls the gain of both amplifiers on the repeater panel. In sections of the country where temperature variations are slight annually, or where coaxial cable is laid almost entirely underground; each alternate "aux" repeater panel is supplie with a MGCU.

Fig. 15 presents a schematic diagram of the unit. The heater secondaries ordinarily supply power to the heater windings of a dynamic regulator. They are connected together by chokes to suppress cross modulation due to carrier frequencies. The "odd" winding ordinarily supplies a regulator associated with one direction of transmission, while the "even" winding supplies the regulator associated with the opposite direction of transmission.

The two heater secondaries and the two R. F. chokes are connected in the form of a bridge. MGCU power is derived from one diagonal of the bridge, and a balance network to equalize the load between the two secondaries is connected to the other diagonal of the bridge. The total drain on the power supply is designed to be equivalent to that of the two dynamic regulators ordinarily supplie with the "aux" repeater panel. The RFC's are designed to withstand 400 milliamperes of load unbalance.

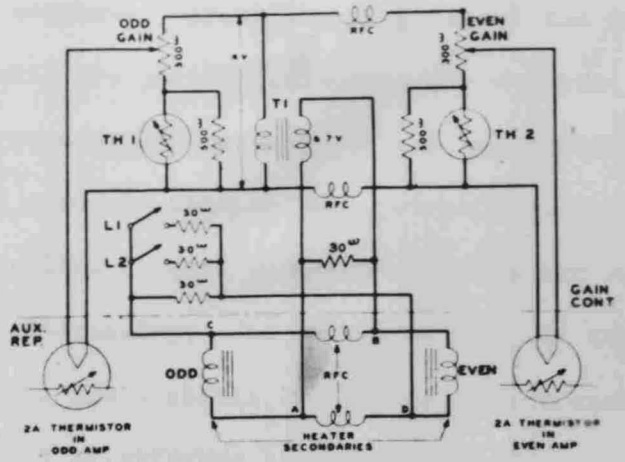

Fig. 15 - Simplified Schematic of Manual Gain Control Unit, Connected to Repeater Power Supply

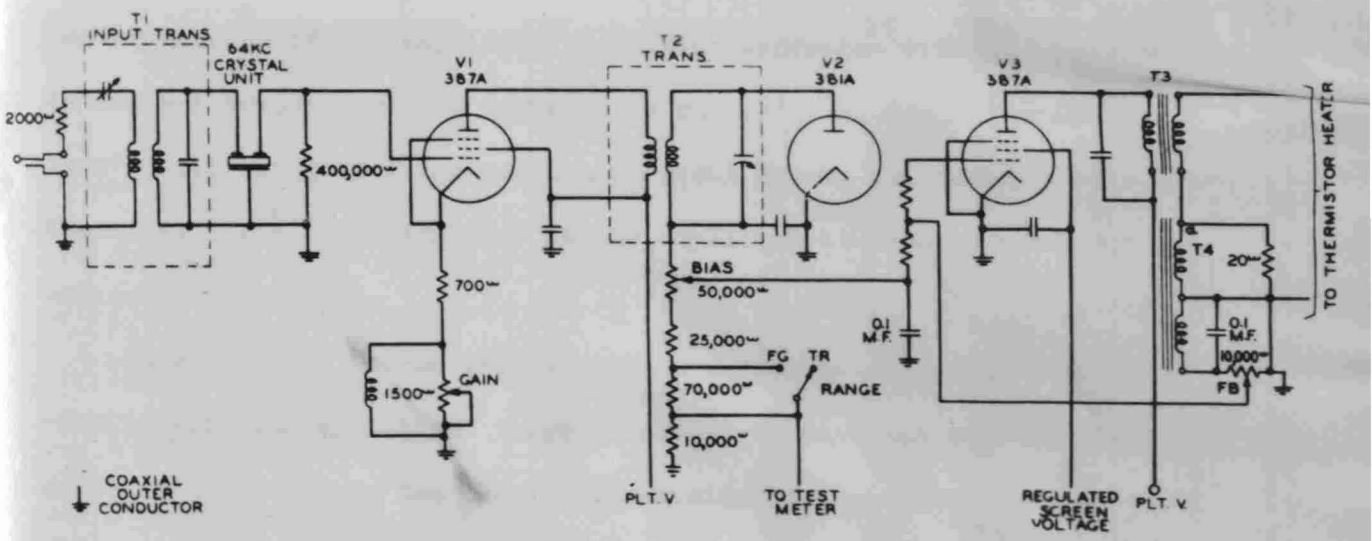

Fig. 16 - Simplified Schematic of 64 Kc Regulator

The circuit of the MGCU proper is supplied at 4 volts derived from a transformer connected across one diagonal of the bridge supply. Two identical circuits are paralleled across the 4 volts. An RFC provides carrier frequency suppression between the paralleled circuits.

The paralleled circuits consist of a potentiometer of 300 ohms in series with a parallel circuit composed of a 500 ohm resistor and an ambient temperature thermistor. The heater winding of the amplifier thermistor connects to the variable arm of the potentiometer and the low side of the 4 volt transformer secondary.

The ambient temperature thermistor has a negative temperature coefficient of resistance similar to the thermistor in the "aux" amplifier. Since it has no heater winding its impedance is controlled solely by ambient temperature. The potentiometer setting is the screw-driver adjustment mentioned above.

By a circuit analysis it may be shown that the current through the heater winding of the amplifier thermistor decreases with an increase in ambient temperature. A decrease in current produces a decrease in "aux" amplifier gain which would have risen due to the ambient temperature increase, since the thermistor in the amplifier is also affected by ambient temperature.

In order that the ambient temperature thermistor in the MGCU is readily affected by ambient temperature the outer braid of a coaxial cable is connected to the low impedance side of the thermistor and to the case containing the unit. The braid of the coaxial cable provides a low thermal impedance path.

DYNAMIC REGULATORS

A dynamic regulator supplies an amount of current to a thermistor heater winding depending on the input pilot power to the regulator. Pilot frequencies are 64 KC, 556 KC, 2064 KC, and 3096 KC. The 2064 KC regulators supply heater windings of thermistors located in amplifiers. These regulators are therefore automatic gain controls.

Regulators operating at the other pilot frequencies usually supply heater windings of a thermistor located and connected so as to vary the loss or impedance of a passive network. The network and thermistor arrangement is known as an equalizer. In performing this function the regulator becomes an automatic loss control.

Fig. 16 is a simplified schematic diagram of the 64 KC regulator. a bridging circuit is used at the input to provide a 4000 ohm load across the transmission line. The impedance of the crystal unit, about 100,000 ohms, is matched to the input impedance by the input transformer. Fig. 17 gives the typical loss characteristic of the 64 KC crystal unit. The signal is impressed on the grid of the amplifier tube. Local feedback is supplied by the unbypassed cathode impedance which may be varied manually. The choke in parallel with the variable gain control is a high impedance at 64 KC. DC bias is developed by virtue of space current flow in the plate-cathode circuit. The output of the amplifier is transformer coupled to a rectifier tube and circuit.

The function of the rectifier is to supply bias voltage to the oscillator, tube V-3. The value of the bias supplied may be regulated manually by the 50 K potentiometer, or it may be changed in two steps by means of the FG-TR RANGE switch.

The oscillator is designed to operate at a frequency of 2000 cps. For proper regulation the rate of change of oscillator output power with pilot input power must be quite large. The characteristic shown in Fig. 18 is typical. A change in input pilot power of about .5 db will change the oscillator output voltage by approximately 2.5 volts. The regulator is adjusted to operate in the middle of the near vertical region of the curve.

The feedback network for the oscillator is an autotransformer having one winding in series with the output transformer secondary. The output secondary of the oscillator supplies power to the heater coil of the thermistor. The bias voltage supplied to the oscillator grid controls the magnitude of the oscillator output.

The "TO TEST METER" lead is connected to a microammeter when the regulator is initially installed. The variable arm of the potentiometer is then varied until the meter reads the correct value of current. For 2064 KC regulators connected to the output of "aux" amplifiers this lead is connected to microammeter type relays which form an integral part of an alarm circuit.

All dynamic regulators are essentially identical with the exception of components sensitive to pilot frequencies. In 2064 KC and 3096 KC regulators the plate-to-grid capacity of the amplifier tube is sufficient to cause regenerative feedback. A neutralizing circuit composed of a tertiary winding on the plate coupling transformer is connected to the grid through a 2 mmf condenser and serves to neutralize the grid and plate circuits of these regulators.

The 64 KC, 556 KC, and 3096 KC regulators are connected at the output of flat gain and transmitting amplifiers, which have different

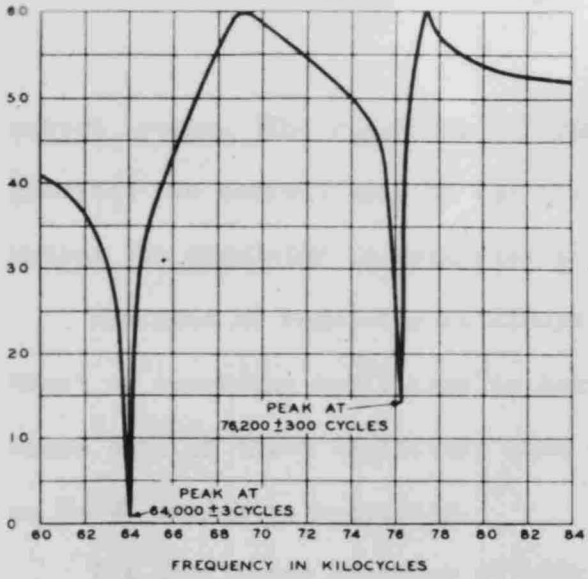

Fig. 17 - Typical Loss Characteristic - 64 Kc Crystal Unit

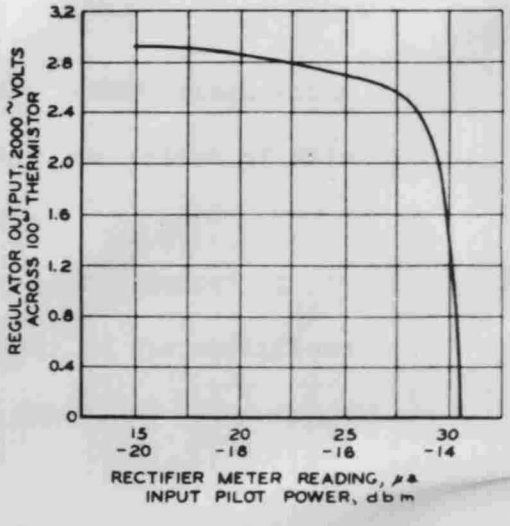

Fig. 18 - Typical Curve of Regulator Output Voltage vs. Rectifier Current or Pilot at Input

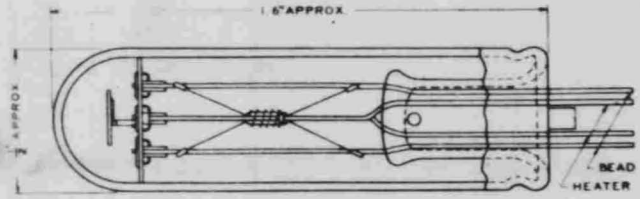

Fig. 19 - 2A Thermistor

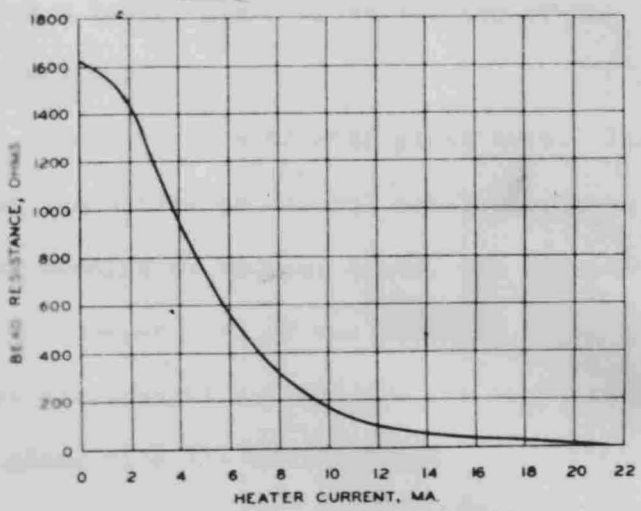

Fig. 20 - Typical Resistance-Heater Current Characteristic of 2A Thermistor at an Ambient Temperature of 70°F.

output levels. The regulator is provided with a RANGE switch which provides the correct bias to the oscillator tube regardless of which output the regulator is connected to.

The 2064 KC regulator is always connected at the output of "aux" or receiving amplifiers to control the gain of the amplifiers. Since both of these amplifiers have identical levels of power output no RANGE switch is necessary.

The oscillator operates at 2000 cycles. To prevent variation of frequency with power supply variations the screen voltage to the tube is regulated by a gas discharge tube.

2-A THERMISTOR

Although the thermistor is not a part of the regulator, it is described here because it is essential for proper regulator action.

Fig. 19 and 20 show a longitudinal cross section of the thermistor and its average characteristic.

The thermistor is placed in an evacuated glass bulb. The control element is a mixture of the oxides of several metals enclosed in a small glass "bead." A heater winding is wrapped around the outside of the glass bead to control the temperature of the oxides. Wires making contact with the oxides are brought out through air tight seals in the base of the glass bulb along with the heater leads.

As shown by the bead characteristic the resistance decreases with an increase in heater current. The temperature of the bead is directly proportional to the heater current. The thermistor is operated ordinarily about a midpoint of the straight line region of the curve corresponding

to a resistance of about 130 ohms.

EQUALIZERS (GENERAL)

It is a usual observation that most manufactured mediums of transmission have a characteristic response to signal frequencies in regard to amplitude and phase. If the response characteristic is uncorrected after reception over the medium the received signal differs in amplitude and phase from the original transmission. Such signals are referred to academically as having experienced amplitude and phase distortion. In the transmission of telephone messages, the bandwidth of 4 KC per audio channel experiences detrimental effects from attentuation but rarely is phase distortion a serious problem.

To correct for amplitude distortion telephone engineers have developed devices which restore the original signal to its transmitted dimensions over the entire frequency band transmitted. In telephone parlance these devices have come to be known as "gain equalizers" and the general practice of correction as "equalization."

There are two types of equalizers used in the L1 system for correction of amplitude distortion. The "A" equalizer is a "mop-up" equalizer installed at each main repeater, switching or non-switching. Spacing of the "A" equalizer therefore occurs at intervals of approximately 50-80 miles. Its function is to correct locally the amplitudes of the signals relative to those sent. It is called a "mop-up" equalizer because it corrects for deviations in level that the passive element equalizers, "basic equalizers," at each "aux" repeater station have not corrected for. By design there-

fore the output level at all main stations is the same regardless of their order of occurrence or direction of transmission.

EQUALIZERS

Each auxiliary amplifier has an insertion gain which is peculiar to itself, but for field acceptance it must fall within set limits on either side of an average curve taken by statistical means for a group of acceptable amplifiers. The magnitude of individual variations from the average is in the vicinity of ± .3 db. The basic equalizer is designed to correct the amplitude response of an average amplifier in tandem with an average length of coaxial cable, to produce a flat frequency response. The configuration of the basic equalizer is shown in Fig. 21. It isacomplex filter network made up of linear passive elements having an average overall characteristic as shown by Fig. 22.

"A" EQUALIZER

The "A" equalizer is a device which may be manually or dynamically controlled. Dynamic control is maintained by 64 KC, 556 KC, and 3096 KC dynamic regulators. It was designed for installation at main-stations at intervals of 9 average auxiliary repeaters, connected by rubber insulated aerial cable. Due to less drastic temperature variation, it would consequently accommodate a longer section of underground cable. Adjustment of the equalizer is a service function and the proper adjustment procedure is too detailed for inclusion. It is a complicated and time consuming process that must be repeated at intervals to account for aging of units,

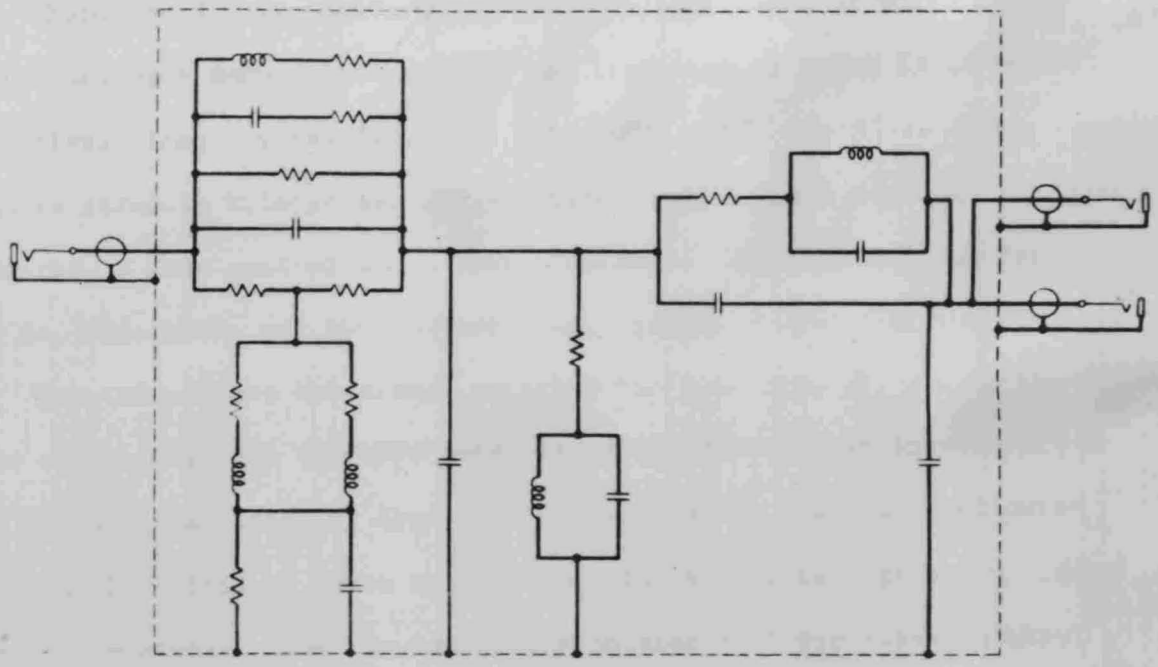

Fig. 21 - Schematic of 53A Equalizer
(For Rubber Insulated Coaxial)

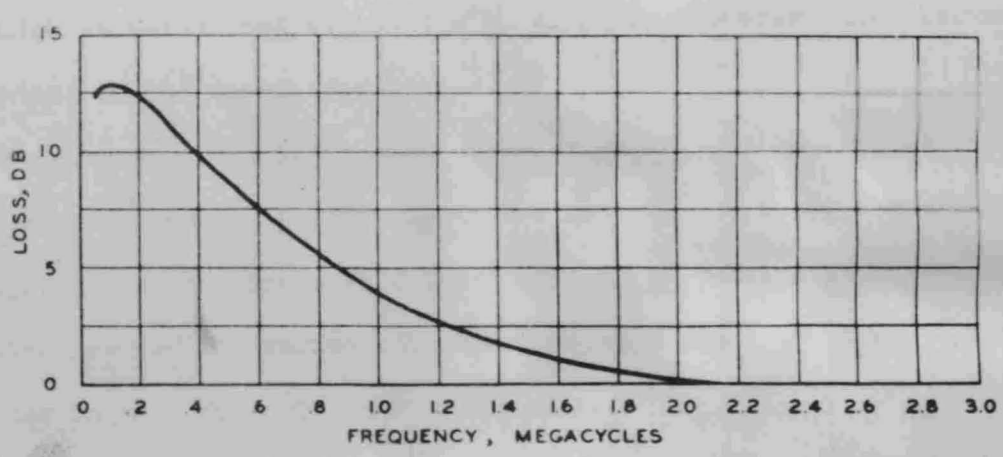

Fig. 22 - Loss Characteristic, 53A Equalizer

their repair, or new installations.

There are 7 basic networks in the equalizer, each of which is designated by a number referring to the frequency at which it is most effective. They are 64, 110, 250, 556, 1056, 2800, and 3096. The numbers refer to kilocycles. In addition there are two controls for some networks, a fine control and a coarse control. The fine control for the 64, 556, 2800, and 3096 networks are changed by means of thermistors.

The thermistors are always utilized for fine control, but in the case of the 64, 556, and 3096 networks heater voltage for the thermistor may be supplied either by dynmaic regulators or by the scheme allowing for manual control as shown in Fig. 23. The 2800 fine control is always a manual control. From Fig. 23 it may be seen that for manual control thermistor heater current is supplied from a regulated source of dc voltage. The current is varied in incremental steps thereby changing the loss by increments.

In the "A" equalizer the thermistors function independently of the ambient temperature. They are enclosed in a temperature stabilized oven which is maintained at 100°±.5°F, which is therefore the minimum temperature of the thermistor bead.

To prevent crosstalk at carrier frequencies when regulators are used as the control device, filter inputs are used to the thermistor heater windings, These are low pass filters capable of passing 2000 cycle regulator power. The series capacitor prevents entrance of dc to the regulator in case of negligence or trouble.

The 20 position fine control manual switch is so designed that the 10 th position is the normal setting. From the 10 th to the 20 th

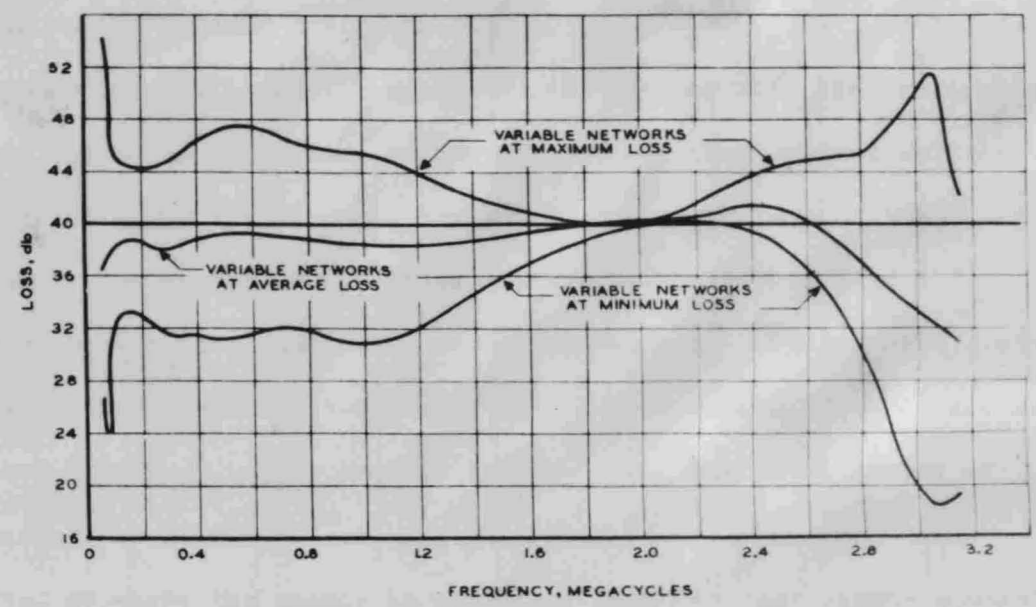

Fig. 23 - Maximum, Average and Minimum Loss Characteristics of D-163386 Equalizer

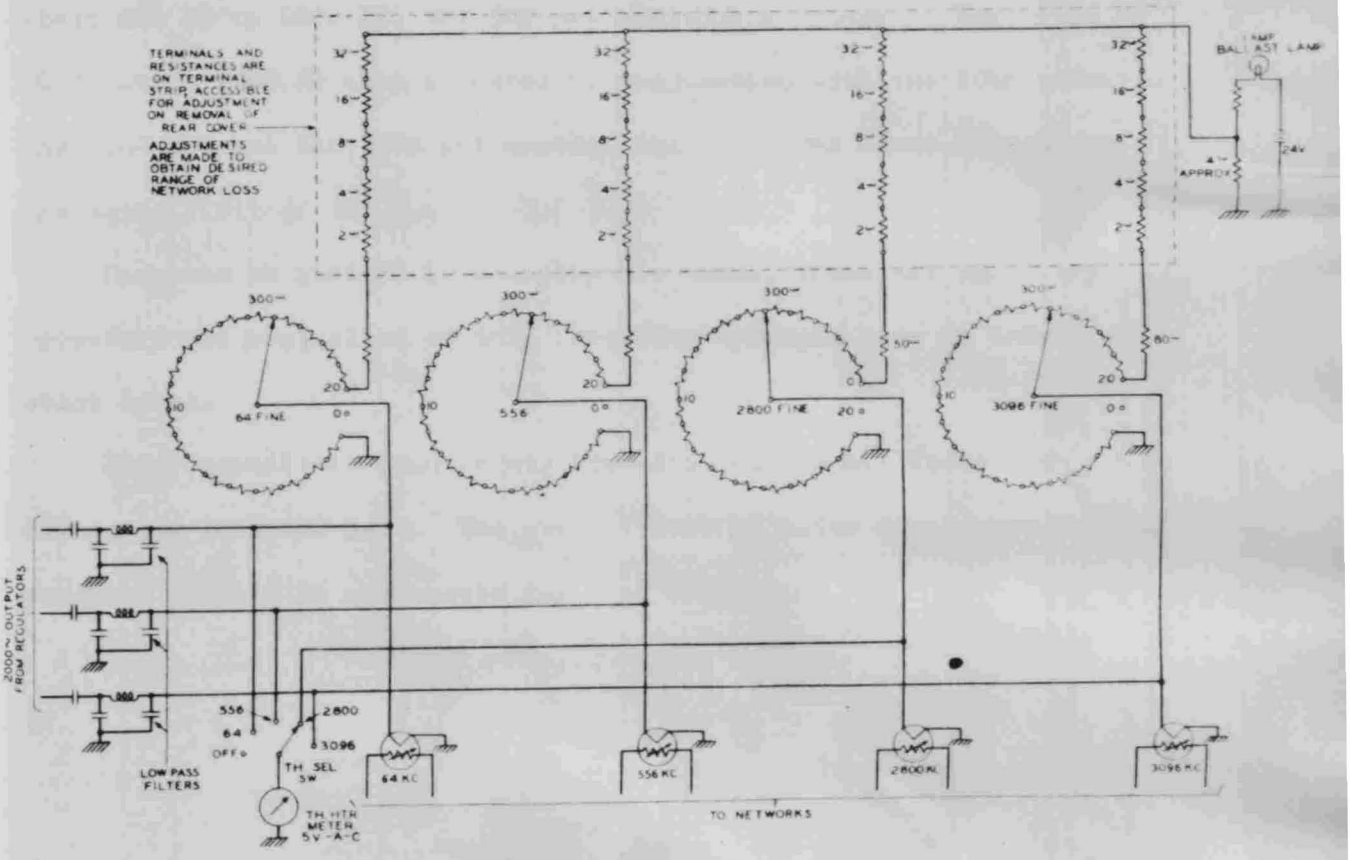

Fig. 24 - D-c Control Circuits for Regulating Networks

position an increase in loss will be produced and from the 1 st to the 10 th a decrease in loss will occur, except for the 2800 fine control which is connected in reverse to the other three fine control switches.

Fig. 24 gives the average, maximum, and minimum loss of the equilizer. The number of loss characteristics obtainable over the frequency band within the limits shown are enormous. There are 3 coarse controls with 3 positions each and 7 fine controls with 20 positions each. The total number of positions is therefore 149. The total number of combinations is 3456×10^7.

Fig. 25 shows the change in equalizer loss for the various control positions at the frequency of the control networks. It may be seen that the 64 and 110 networks have no effect on the loss at frequencies above about 250 KC. The 250 network has an effect in the frequency range from about 250 KC to 1056 KC, the 556 net produces a change in loss from 64 KC to about 2000 KC when operated in conjunction with the 1056 network. The 2800 net and the 3096 net control the loss from about 2000 KC to the upper limit of the band around 3100 KC.

The loss as 2064 KC is a negligible amount since all auxiliary repeaters are controlled at this frequency by regulators to have a constant level.

Later equalizers incorporate two additional nets. These are designated 1552 and 2450. The overall loss of later equalizers is also somewhat reduced to compensate for aged amplifiers.

Control Desig.	Pos.	64 kc	110 kc	250 kc	556 kc	1056 kc	2800 kc	3096 kc
		Change in Equalizer Loss in db at Frequency Indicated, Referred to Mid-position of Key or Control						
64 COARSE	-	+3.5	+0.9	+0.1				
	0	0	0	0				
	+	-3.5	-0.9	-0.1				
64 FINE	0	+5.0	+1.0					
	10	0	0					
	20	-5.0	-1.0					
110	0	+3.8	+2.6	+0.2				
	10	0	0	0				
	20	-3.7	-2.6	0				
250	20			+0.8	+3.8	+0.2		
	10			0	0	0		
	0			-0.8	-3.8	-0.2		
556	0	+1.2	+2.0	+5.3	+5.0	+3.8		
	10	0	0	0	0	0		
	20	-1.3	-1.9	-5.2	-5.0	-3.8		
1056	0					+3.8		
	10					0		
	20					-3.9		
2800 COARSE	+						+0.9	+4.5
	0						0	0
2800 FINE	20						+0.6	+4.0
	10						0	0
	0						-0.6	-5.3
3096 COARSE	+						-2.7	-2.8
	0						0	0
	-						+2.6	+3.2
3096 FINE	0						+4.4	+5.0
	10						0	0
	20						-4.1	-5.0

Fig. 25

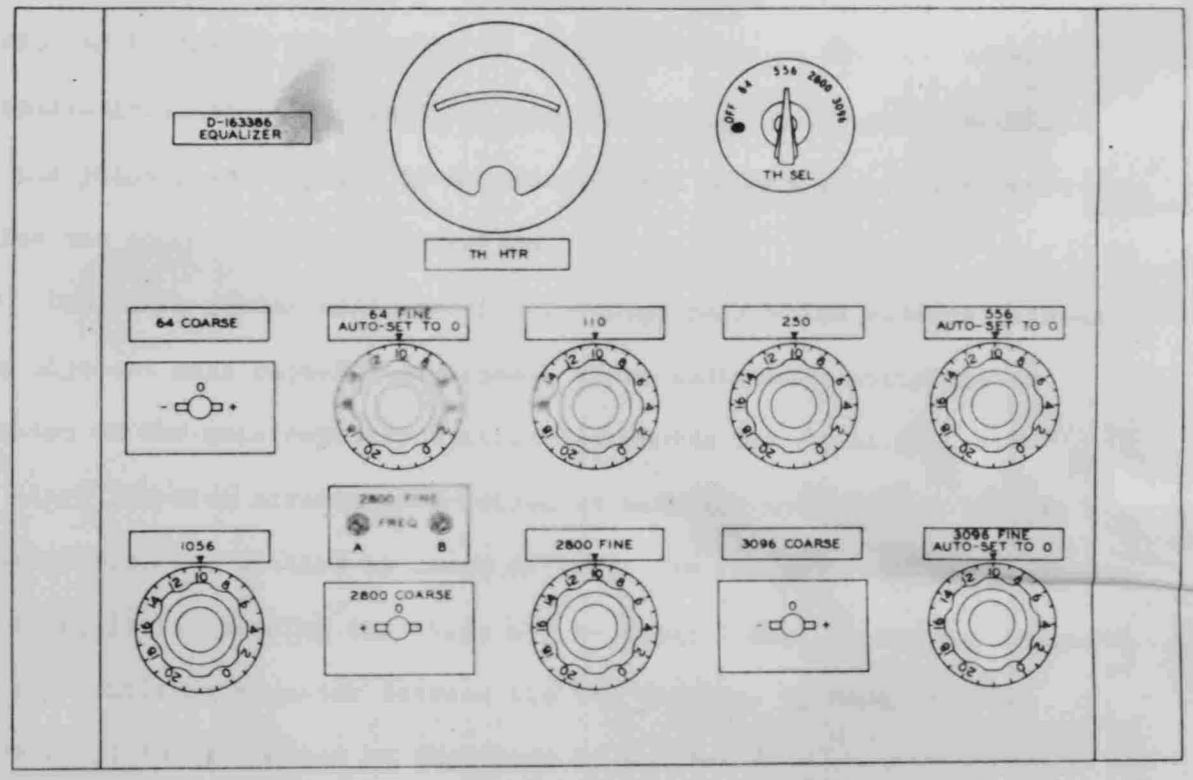

Fig. 26 - Face View of D-163386 Equalizer

CHAPTER VI

PILOT INDICATORS AND ALARMS (GENERAL)

Pilot indicators are provided for pilot frequencies of 64,2064, and 3064 KC. These indicators are installed at each main repeater and at terminals. At switching main repeaters the switching function is performed by the 64 KC and 2064 KC pilot indicators. For all other installations the pilot indicators are connected to the alarm circuit. If the pilot power departs by a predetermined amount from its normal value the alarm circuit is energized.

The alarm system consists of a 22-gauge pair which extends between two adjacent main repeater stations. Alarm indicating equipment is located at the main repeater station designated the "home office." An alarm location circuit is provided at both the home office and the distant repeater station by means of which the repeater and the direction of transmission causing the alarm may be identified. Alarms may be given by any auxiliary repeater between the two stations by means of the circuit of the regulator as explained in Chapter V.

CONTINUOUS PILOT LEVEL MEASUREMENT

The pilot indicators for all frequencies differ only in the circuits which are sensitive to frequency. The block diagram of Fig. 27 presents a general layout of the indicator system. Each indicator has a high input impedance, a selective input circuit, a

feedback amplifier, a rectifier, and a dc amplifier. The output of the rectifier is used to operate the indicating meter and the microammeter type relay.

Since the input impedance of the indicators is very high, a long cable connecting them in parallel with the line would introduce an objectionable amount of parallel capacity to the line. Consequently, the line itself is connected through a bracket arrangement which allows a connecting probe to energize the indicators. The indicators may be removed by a two position switch without causing interference on the line. The input impedance of the indicators is greater than 4000 ohms.

Each indicator has a transformer input circuit similar to the input circuit of the regulators at the same frequencies. The same crystal elements used for the regulators are used in the indicator circuits for selectivity.

The amplifier section of the indicators is conventional feedback amplifier design employing two stages. A tuned impedance is used as the interstage coupling. In the 64 KC and 3096 Kc indicators the second stage is connected to the rectifier circuit by means of tuned transformers. In the 2064 KC indicator a tuned impedance coupling is used.

A simplified schematic of the rectifier and dc amplifier circuit is shown by Fig. 28. The generator shown represents the signal input from the amplifier section of the indicator.

The criss-cross connection allows for a very stable balance condition with no signal input, and eliminates errors due to contact potentials in the rectifier circuit. With no signal applied the balance adjustment is positioned so that the microammeter reads zero.

Change in plate voltage are nullified by a resultant change in the grid bias on the dc amplifier tubes.

The impression of a signal upsets the balance condition and allows point B to reach a higher voltage than point C, thereby causing the microammeter to register a reading. The gain control of the indicator amplifier is adjusted to give the correct reading by the microammeter.

The alarm relay shown is similar to those described subsequently for "aux" repeater stations. It may be adjusted to operate when the signal differs by from ± 2 to ± 5 db from the normal value. Contact is held by magnetic force once the relay operates. A mechanical reset is provided by means of a knurled knob which protrudes from the glass enclosed face of the relay. The relay contacts are closed through an office alarm circuit to signify departure of the pilot level from the ± 2 or ± 5 db of the normal value.

When the 64 and 2064 KC indicators are used for line switching purposes the relay is set for ± 5 db variation from normal. An electrical reset is supplied with this alarm relay. Minor changes in the indicator panel are also made to allow for slightly different electrical characteristics.

PILOT ALARM SYSTEM

As noted previously, a microammeter type relay is installed at each auxiliary repeater which has a dynamic regulator as automatic gain control. The relay is essentially a microammeter which makes contact point at either end of its current range. Once contact is made a magnetic field holds it securely. Fig. 29 shows the circuit and

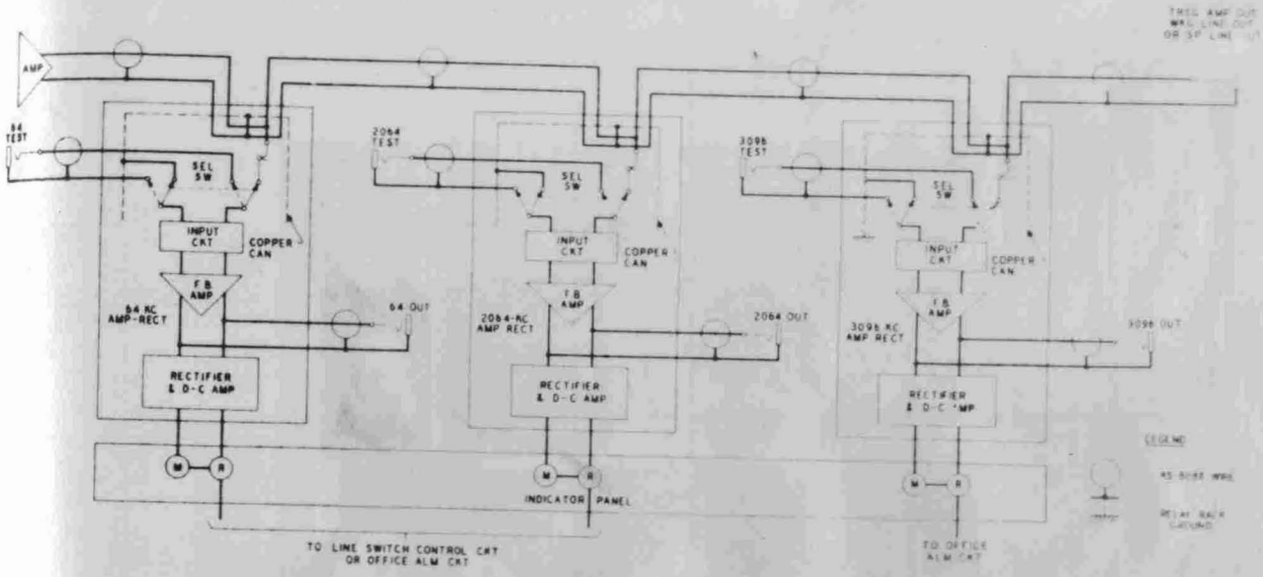

Fig. 27 - Block Diagram of Pilot Indicator Circuit

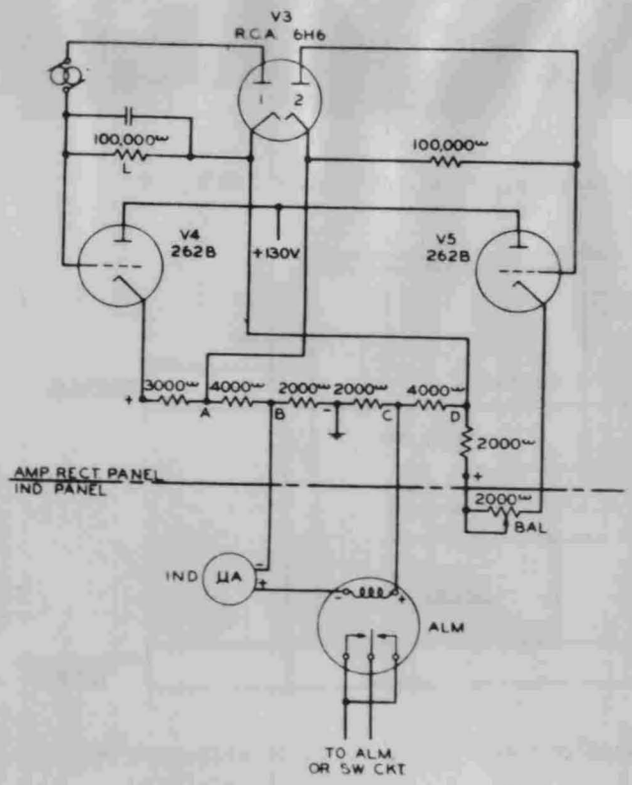

Fig. 28 - Simplified Schematic of Rectifier and D-c Amplifier

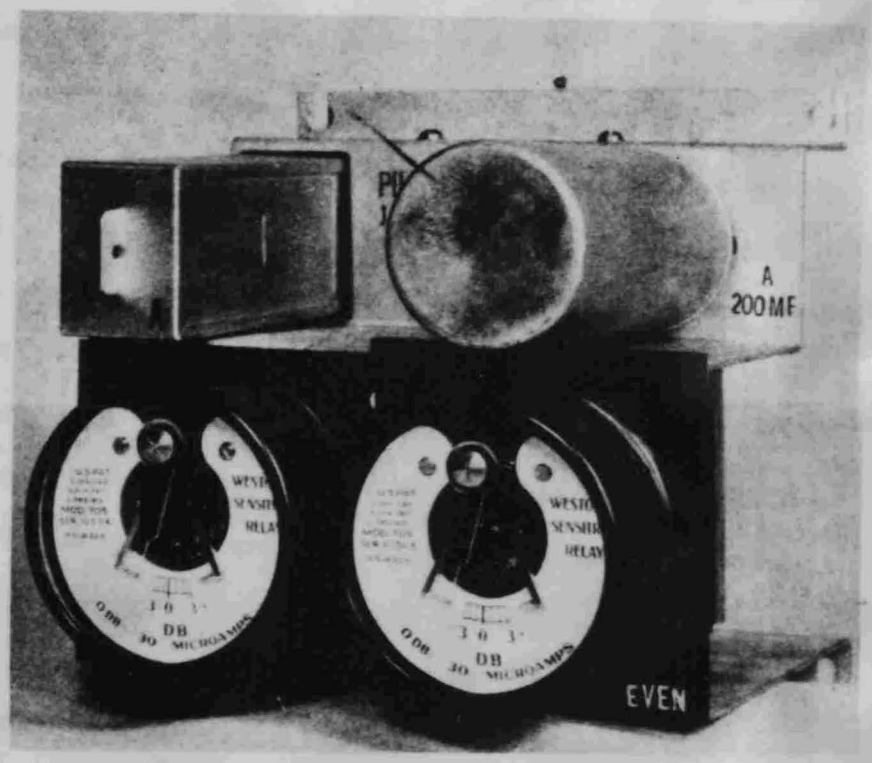

Fig. 29a - Photograph of Pilot Alarm Unit

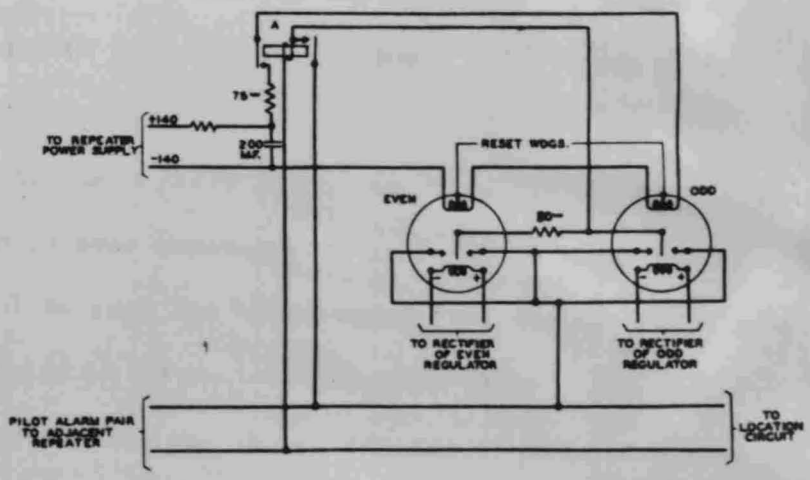

Fig. 29b - Simplified Schematic of Pilot Alarm Unit Connected to Pilot Alarm Pair

a pictorial view of the pilot alarm unit. As noted in the chapter on regulators the meter current derived from the regulators is essentially constant under normal operating conditions. This current supplies the relay windings labeled "To Rectifier of Even (or odd) Regulator" and causes movement of the needle. A departure of the pilot input power of ± 3 db from normal level is sufficient to make the relay operate.

The other winding shown by the drawing is a reset winding. Mechanically, reset is accomplished by two metal arms forced inward by a solenoid. The metal arms move the needle to the center position. If the rectified regulator current is of the correct value after reset the relay contacts will not be remade.

Six volts is sufficient to reset the relays. This voltage is supplied by a 200 mf electrolytic condenser through a 75 ohm resistor to the reset windings. The condenser is charged through a 100,000 ohm resistor from the plate supply circuit of 140 volts.

If either contact of the EVEN relay is made the two wires of the alarm circuit are connected through the A relay winding and the 50 ohm resistance. If either contact of the ODD relay is made the 50 ohm resistance is out of the circuit and the A relay winding alone is placed across the alarm wires.

Operation of the A relay itself is accomplished by a greater value of current than is ever necessary to operate the alarm relays. This current is supplied over the alarm wires from the home office where the alarm location circuit is installed. When the A relay operates, the alarm relays are shorted and the resistance of the alarm circuit before and after closure of the A relay will indicate whether the 50 ohm resistance was in the alarm circuit before A relay operation. It is

therefore apparent to the personnel at the home office which directional circuit caused the alarm.

A simplified schematic of the pilot alarm system is shown by Fig. 30. The resistance measuring circuit is shown at the right. It is a one-to-one Wheatstone bridge. A variable voltage is supplied by a battery in series with a variable resistance. The 460 ohm resistances represent the resistance of the alarm pair over an average distance of repeater separation. The pilot alarm relays are shown as a single unit with separate ODD and EVEN contacts.

Under satisfactory operating conditions the alarm pair is an open circuit. As soon as a relay associated with one direction of transmission operates due to an interruption of pilot supply, succeeding relays associated with the same direction of transmission will also operate. Tables at the main station will allow the personnel to decide from the resistance measurement of the Wheatstone bridge which repeater station was first in the line of failure. Operation of the A relay by a high current measurement will indicate which direction of transmission is at fault. If, after the A relay is operated, the Wheatstone bridge battery supply is shut off the A relay will disengage. Another measurement at a current value less than is necessary to operate the A relay will indicate whether the original trouble has been cleared or whether it is permanent.

If the trouble is of a temporary nature at the first repeater from the home office the series of measurements is repeated for the next repeater. After indication of permanent disability of a repeater further measurements are not helpful until the trouble is cleared.

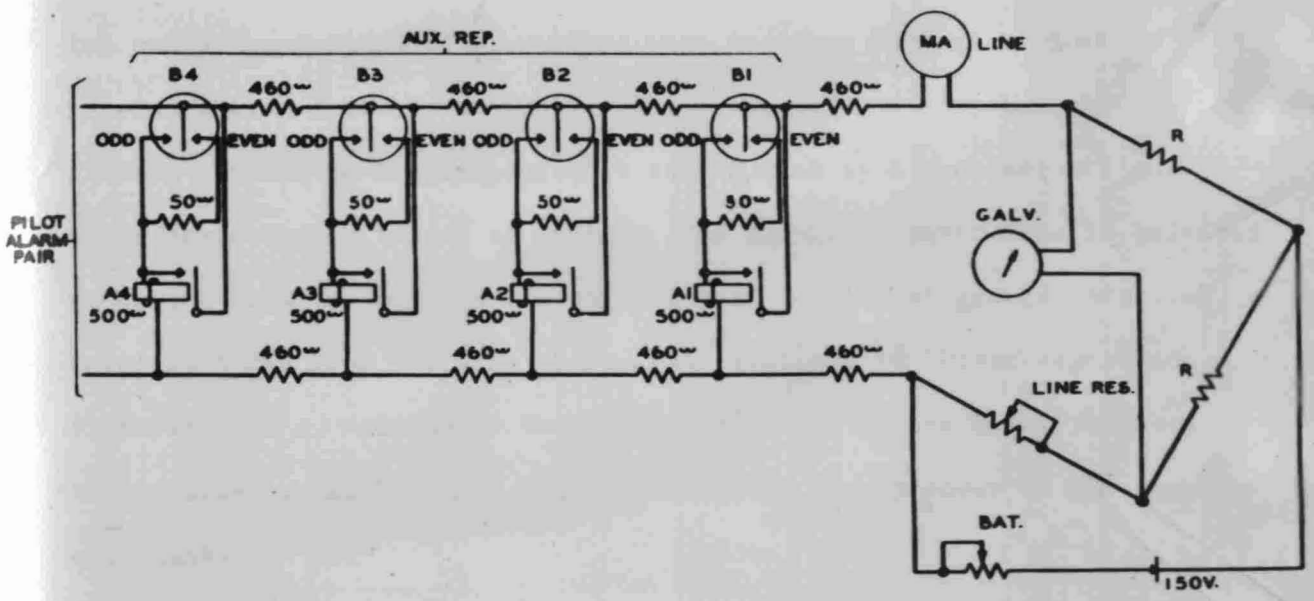

Fig. 30- Simplified Schematic of Pilot Alarm System

CHAPTER VII

REPEATER POWER SUPPLY ARRANGEMENTS (GENERAL)

It is apparent from previous chapters that the L1 system of carrier communications consists of two coaxial lines for two way transmission. Advantage of this arrangement is taken to supply power to the repeater stations. A loop circuit is improvised from the two center conductors by connecting them together through a shunt impedance at a distant station. Sixty cycle power at the local repeater is then applied to the loop circuit thus formed by a constant current transformer center tapped to ground. The resulting power line is balanced to ground with the outer conductors of each coaxial at ground potential. Power is taken from the line at repeater stations by "Power Separation Filters" (PSF's) and passed through transformers before being returned to the line by another PSF. The transformers supply power to the repeater equipment.

By maintaining a constant current in the loop circuit all repeaters will be supplied with a constant voltage. A regulating network at the source maintains a constant input current to the loop and loading units are located along the line to nullify shunt leakage of current.

A standby unit is located at the power source which ordinarily is used as a rectifier to charge a local battery switchboard supply. If failure of the 60 cycle source occurs the battery charging circuit is converted to an inverter circuit using the local switchboard supply as its source.

POWER SUPPLY CIRCUIT

I. Power Section

Fig. 31 shows in simplified form a power section. The input power is derived from a 230 volt, single phase, 60 cycle source, which is made available by commercial companies. An autotransformer is motor driven to supply a transformer secondary with a constant current output of about 430 ma as read on the MA meters shown. The center tap of the secondary is grounded. The output of the secondary is fed through P_1 and P_2 which are windings of the T transformer located on the main repeater panel. P_1 supplies power to the units associated with one direction of transmission (odd units) while P_2 supplies power to the units associated with the opposite direction of transmission (even units). The OUT PSF is used at the main repeater station to place the 60 cycle power onto the center conductors of the coaxial line which transmits it to the first "aux" repeater.

At the "aux" repeater the IN PSF takes the 60 cycle power from the line while at the same time the carrier signals are allowed to pass. P_1 and P_2 of the "aux" repeater panel function in the same way as the P_1 and P_2 windings of the main repeater panel. Successive "aux" repeaters are served until the end of the power section is reached.

Although it is not apparent from the diagram, power is also supplied at the main repeater to a power section extending in the opposite direction from the section shown. Each main repeater therefore supplies power to half of the "aux" repeaters between it and the preceding and following main repeater.

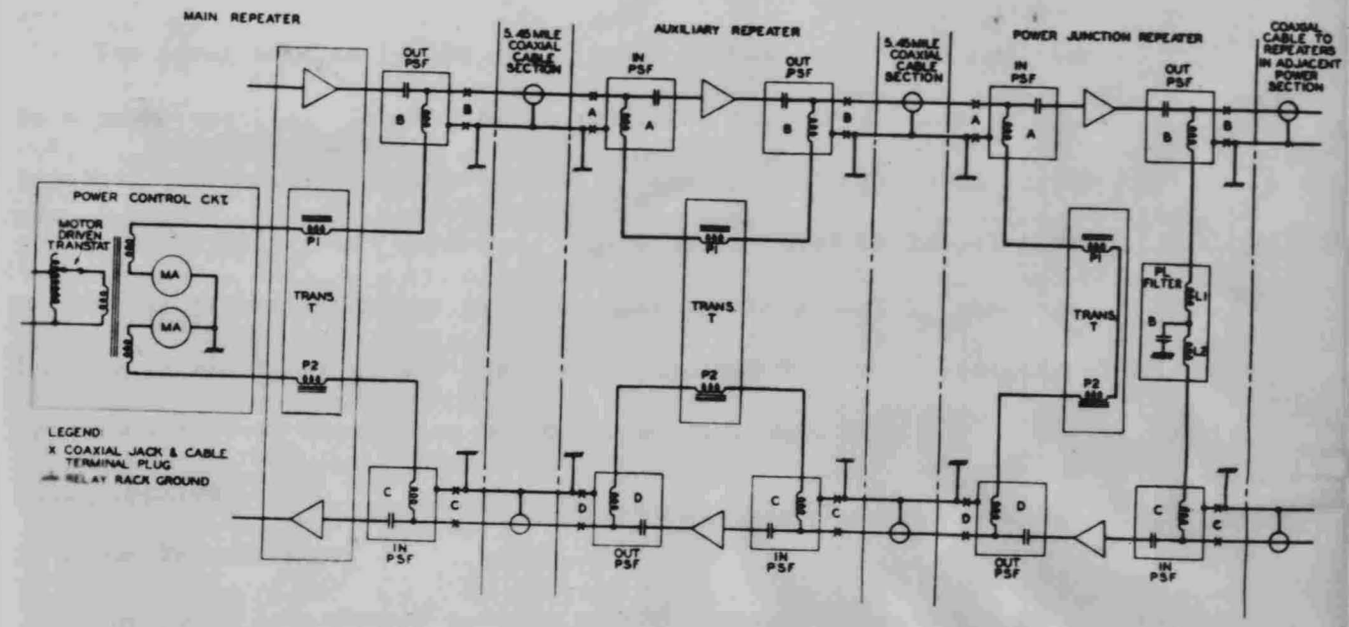

Fig. 31 - Schematic of a Power Section

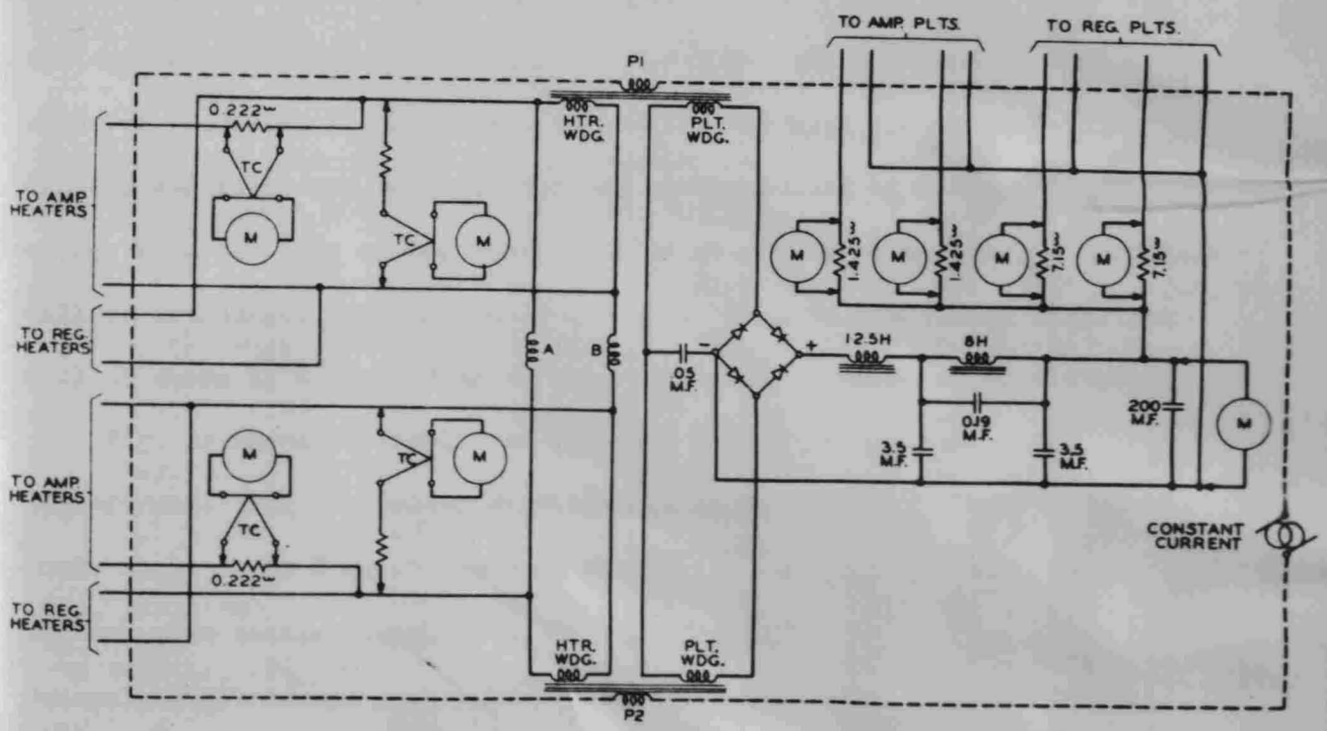

Fig. 32 - Simplified Schematic of Repeater or Amplifier Power Supply

The power section is looped together at the last "aux" repeater in a power section. Looping is accomplished for one section by tying together the output terminals of the P_1 and P_2 windings which supply power to the last "aux" repeater. The other section is looped through a balanced filter which has the same loss as the P_1 and P_2 windings. Looping is necessary at the same "aux" repeater to insure resistance measurements over the entire length of coaxial when line faults are being located.

2. Power Transformer

The power transformer consits of two primary windings wound on separate cores which are not coupled magnetically. Four primary taps are provided which allow for an adjustment of primary voltage. Such an arrangement is necessary to provide for the decrease of current due to shunt leakage as the length of the power section increases. Separate secondaries for heater and plate supplies are provided. The heater voltage is controlled by the primary taps. The plate secondary has taps for adjusting plate voltage as the primary taps are changed. Primary and secondary taps for the odd windings must be changed in unison with the taps on the even windings otherwise an unbalanced condition will be introduced into the power section. Such an unbalanced condition will be shown by different meter readings at the main repeater station.

Fig. 32 shows in simplified form the secondary circuit of the transformer. The two heater windings are shown connected through two choke coils A and B which are used for carrier suppression between the odd and even heater secondary windings. The coils readily pass 60 cycle currents and maintain the line balance.

The two plate windings are connected to supply a bridge type selenium rectifier. The selenium rectifier will operate without injury at much higher temperatures than a copper oxide rectifier. The forward resistance of the selenium rectifiers varies with age until it reaches a constant value after a period of approximately one year of continuous operation. This necessitates the provision for secondary taps.

The rectifier employs a choke input filter of conventional design except for the antiresonant circuit of the henry choke and .19 mf condenser. The output of the filter feeds the plate circuits of the amplifiers and regulators. It is shunted by a 200 mf electrolytic condenser. The function of this condenser is to supply power to the amplifiers and regulators during momentary interruptions of the power supply before the rectifier-inverter can operate. The condenser is a plug in unit as shown by the face view of the "aux" panel in Fig. 14. It must be charged before being plugged in, otherwise an overload condition will be imposed on the rectifier.

A special test set is provided which measures the currents and voltages indicated. All components except the meters indicated by the figure are connected. A selector switch allows for the various measurements.

The switch and plugs necessary for the connection of the test set are shown by the face view of the "aux" repeater panel shown by Fig.

3. Loading.

The primary current at each auxiliary repeater is the vector sum of the line and shunt currents. The resultant is not always the same at each repeater. To maintain a more nearly uniform secondary voltage,

power loading is resorted to. A shunt coil may be installed at the power source and series coils may be connected between the input PSF's and the primary windings, or condensers may be connected across the transformer primaries. The type of loading is a function of each individual repeater. Shunt loading at intermediate points cannot be used because of the sealed condition of the cable. Shunt loading at repeaters is unsatisfactory because of impedance measurements which must be made on the line during fault location. The following table gives empirical data on power loading and the power source. Power loading is begun at the last repeater in the power section.

# of aux repeaters	# of points with loading	Approx. Input dc voltage	Approx. Input Power. Watts
3	0	624	345
4	0	754	410
5	0	894	480
6	1	1046	560
7	3	1328	705
8	4	1484	785
9	5	1700	895
10	6	1894	990

4. Power Separation Filters

Power separation filters are shown schematically by Fig. 31 as being composed of a shunt coil and a series condenser. The condenser passes carrier frequencies and stops the power frequency. The coil

passes the power frequencies and stops the carrier frequencies. This representation is essentially correct for the filters. Actually the shunt coil consists of two windings with two shunt condensers connecting to the outer conductor. The series condenser is followed by additional shunt elements to pass 60 cycle currents. The series section of the filter supplies an attentuation of 100 db to 60 cycles and .1 db to carrier frequencies. The shunt section attentuates carrier frequencies from 32 db to 70 db over the range from 60 KC to 3100 KC.

The filter described above is used throughout except for the output PSF at "aux" repeaters. The out PSF at "aux" repeaters has an additional shunt section after the series condenser to provide a small degree of equalization.

5. Rectifier-Inverter.

The rectifier-inverter normally operates to supply dc voltage to 130 volt batteries used locally in the main repeater station. The circuit of the rectifier for automatic operation is shown by Fig. 33. The rectifier tubes are gas filled triodes which may be regulated by the phase control circuit on the grids of the tubes. This control may be manual or automatic. When manual control is used a variable resistor (V) in series with a fixed condenser (RCI) is used to control the phase.

When automatic control is used the variable resistance is replaced by the plate resistance of a vacuum tube (RVI). The plate resistance of this tube is controlled by varying the grid voltage. The grid voltage is supplied by the voltage drop across the voltmeter V which is controlled by the plate resistance of RV2. The varistor bridge acts as a reference voltage for the system.

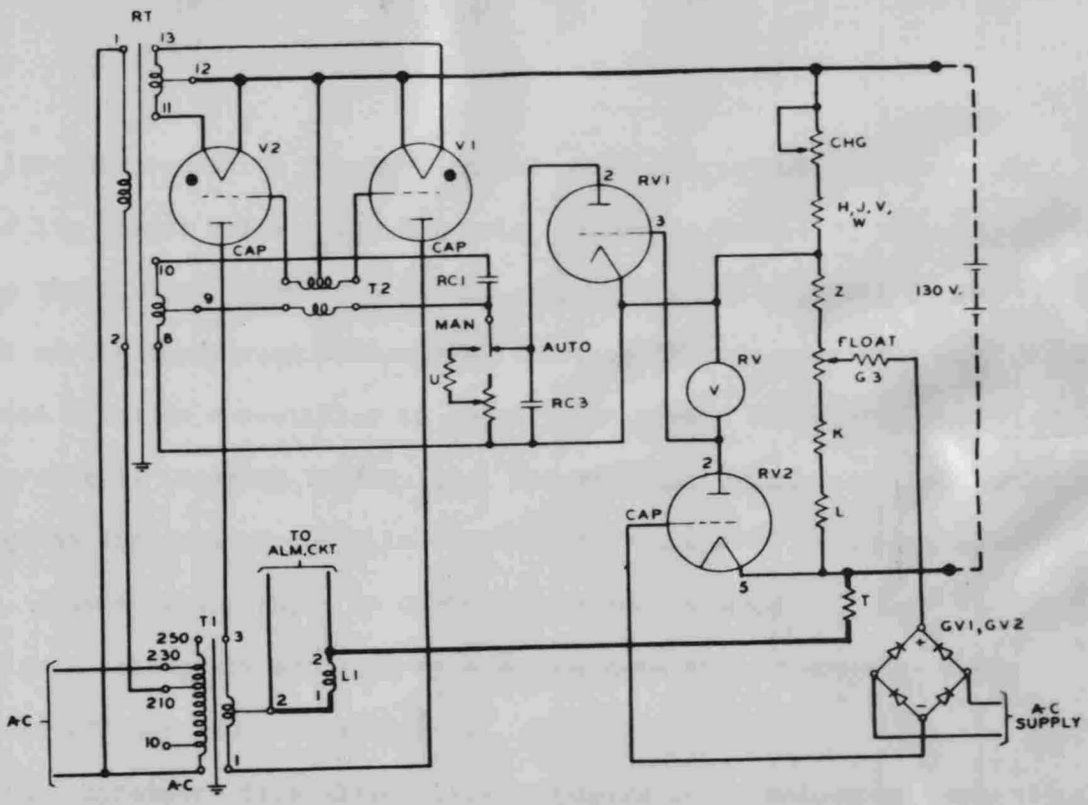

Fig. 33- Rectifier Operation Voltage Regulation, Manual or Automatic - Automatic Shown

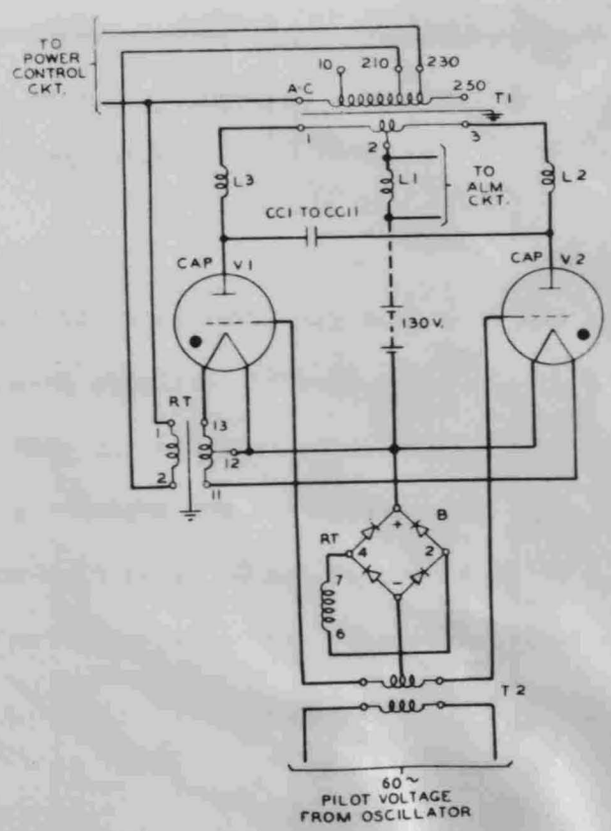

Fig. 34- Inverter Operation

Inverter operation begins when the power source voltage drops to 90% of its normal value. The 130 volt battery is connected by relays to the thyratrons. Thyratron filament power must be supplied by the output of the thyratrons themselves, therfore the inverter must be operated first as a rectifier in order to have warm filaments. The inverter circuit is shown by Fig. 34. The varistor bridge supplies a negative voltage to the grid circuits in addition to which a 60 cycle voltage is added. The varistor input is derived from the inverter output. The 60 cycle grid voltage is supplied by a vacuum tube circuit locally which operates off the 130 volt batteries.

The thyratrons fire alternately supplying large values of peak current to the T1 output transformer. Condensers CC-I to CC-II act as storage condensers and also serve to extinguish the conducting tube when the non-conducting tube fires.

The alarm circuit is energized from a 120 cycle voltage developed across L1 during both rectifier and inverter operation. The 120 cycle voltage is fed to a transformer which has a secondary winding tuned to 120 cycles. The tuned secondary supplies a gas tube whose current controls the operation of the alarm relay.

6. Rotating Equipment.

More recent installations of auxiliary equipment has made the rectifier-inverter circuit obsolete although these equipments will continue to function in their present installations.

Present practice prescribes the installation of three rotary units on the same shaft. One unit is an AC motor, one is an AC generator, and the other is a DC motor or generator. The AC motor-alternator is

normally used to supply AC power while the DC unit operates as a generator to charge batteries. During power failure the batteries drive the DC unit as a motor which in turn drives the AC alternator.

CHAPTER VIII

AMPLIFIERS (INTRODUCTION)

The previous chapters have been concerned with units of the L1 system which are easily understood and represent practices which have long existed in the field of carrier development. In the next chapters a few basic considerations will be discussed which are peculiar to the L1 system and represent more recent developments. A brief technical analysis of properties and design will be attempted in this and subsequent chapters.

As pointed out in previous chapters, there are four models of amplifiers used in the L1 carrier system. These are known as (1) transmitting, (2) receiving, (3) flat gain, and (4) auxiliary amplifiers. The first three are sometimes referred to as office amplifiers since they are generally installed at main stations or terminals where the routine of telephone service is performed. The fourth amplifier is often termed a line amplifier since its installation is at regular intervals along the coaxial lines. Basic differences in the amplifiers are apparent in their input and output impedances, and in the complexity and function of their feedback circuits.

FEEDBACK AMPLIFIER CONSIDERATIONS

1. Basic Assumptions

A complete analysis of feedback amplifier design is an exhaustive study.* By a few fundamental considerations however the advantages

* Bode, H. W. - (4)

of such an amplifier may be readily understood. From Fig. 35, which represents a feedback circuit, let μ be the forward gain of the amplifier

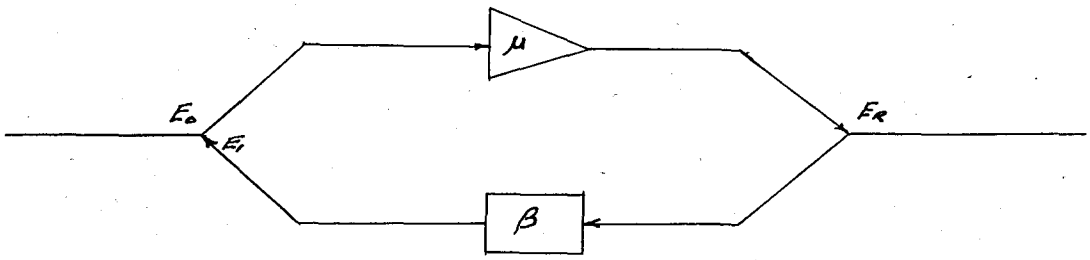

Fig 35 Schematic for a Feedback Unit

without feedback, E_o the impressed input signal, E_R the output signal, and β is the ratio of E_R to E_1. β represents a passive network across which the output voltage is impressed and E represents the voltage fed back to the grid.

The total signal to the amplifier, u, will therefore be $E_o + E_1$. The output voltage may then be calculated to be

$$E_R = \mu (E_o + E_1) \qquad (1)$$

$$\text{but } E_1 = \beta E_R \qquad (2)$$

$$\text{and } E_R = \mu (E_o + \beta E_R) = \frac{\mu}{1-\mu\beta} E_o \qquad (3)$$

The overall amplifier gain may then be written

$$\frac{E_R}{E_o} = e^{\sigma} = \frac{\mu}{1-\mu\beta} \qquad (4)$$

where σ is the overall gain in nepers. This equation may also be written as follows:

$$e^{\sigma} = \frac{\mu\beta}{1-\mu\beta} \frac{1}{\beta} \qquad (5)$$

Now if the product, $\mu\beta$, is made large with respect to unity, as is generally done for stable amplifiers, the above equation may be written

$$e^{-\theta} = \frac{1}{\beta} \qquad (6)$$

$$-\theta = -\log_e \beta \qquad (7)$$

Equation (6) may be interpreted to mean that the gain of the feedback unit is inversely proportional to the amount of feedback since by taking logarithms of each side and $\log_e B$ represents the loss of the feedback circuit in nepers. Therefore for $\mu\beta >> 1$ the gain of the amplifier is equal to the negative loss of the B circuit.

Many possibilities are provided by application of equation (7). It is readily seen that the gain of an amplifier may be controlled solely by the loss of its feedback circuit. For the single stage and multi-stage amplifiers introduced in previous chapters this condition was employed to vary the gain of the amplifiers. The mu-beta product is made sufficiently large so that a db change in the beta circuit loss results in a db change in the amplifier output. For such amplifiers the relative range of variation must be small compared to the overall feedback in order that the mu-beta product will remain large. Such a device as beta circuit loss can not be utilized to vary the gain from zero to a maximum.

3. Self-equalizing amplifiers.

It may be easier to obtain a clearer insight into the self-equalizing nature of L1 amplifiers by consideration of a hypothetical situation. Suppose for example that a source of voltage over the frequency range

of the L1 system is maintained constant at the input to an average length of coaxial. The input signal to the following repeater will then have a loss-frequency curve which differs from the input signal by the loss-frequency characteristic of the coaxial. The db loss of a coaxial is proportional to the square root of the frequency. The characteristic can be expressed as $L = K\sqrt{f}$. The signal at the input to the repeater will then be $L_o - L$ where L_o is the signal input to the coaxial. The units are db.

If the beta circuit loss of the repeater amplifier is flat over the band width then the output signal will be $L_o - L$ G where G is the gain of the amplifier. The shape of the output signal is still controlled by L since G is a flat gain due to the beta circuit. The loss-frequency curve has not been altered although the level of the signal has been changed. It is evident that if the original ratio of amplitudes is to be recovered or maintained, a characteristic other than a uniform one is necessary for the amplifier.

Suppose the amplifier characteristic is changed so that it is the negative of the cable loss. The output amplitude of the amplifier will now be flat with frequency and the original ratio of voltages will be similar if the amplifiers compensate for the coaxial loss. If the loss of the cable is changed due to an increase or decrease of temperature then it will be necessary for the amplifier gain to change by a constant amount over the band-width to compensate for the loss*.

The problem now arises as to how the compensation and regulatory action of the amplifier is to be achieved. Examination of equation (7)

*This function is achieved by the regulators discussed earlier.

indicates that a frequency-sensitive beta circuit could be used to compensate for the line loss since this equation is independent of frequency. However if the regulatory action of the amplifier is to be achieved in the beta circuit also, conflicting requirements may be set up. This is especially true since the regulatory element is to be the variable resistance of a thermistor, which will change the Q of the frequency sensitive circuits, and consequently their loss. An undesirable compensating characteristic would therefore be obtained due to regulator action.

Suppose it is decided that regulation will be the only requirement (in addition to feedback) which will be imposed on the beta circuit. The problem now necessary of solution is that of compensation. This problem is very handily solved by having input and output transformers for the amplifier which are wound in such a way as to compensate for the line loss. To make the design of these transformers easier one half of the compensation may be achieved in the input transformer and one half in the output transformer. The above methods then lead to a self-equlaized system of amplifiers.

3. Performance.

The above simplified outline gives the considerations which have led to the present design of the L1 amplifiers. Some additional considerations must be heeded however. In the first place the beta circuit is in the cathode connections of the tubes and any change in the amplifier input or output configuration will affect the function of the beta circuit. This accounts for the complex configuration of the beta circuit.

as shown by Fig. 36. The loss of the beta circuit is essentially constant over the bandwidth with a change in the value of the thermistor resistance resulting in a non-uniform change in the loss of the beta circuit to follow the temperature coefficient of the line.* Fig. 37 shows the transmission through the beta circuit for the "aux" amplifier. A similar curve is characteristic of the receiving amplifier beta circuit.

VOLUME PERFORMANCE

The use of compensating transformers at the input and output of the line amplifier will naturally result in the coaxial line being unterminated and reflections will be the result. This problem has been thoroughly investigated by H. W. Bode and he has introduced the concept of "volume performance" to explain it.* "Volume performance" or VP is a fictitious transfer impedance which relates the voltage at one point to the current at another point.

"This concept is defined as the ratio of the signal voltage on the grids of the input tubes to the plate current flowing in the output tubes of the preceding repeater. In a multichannel telephone system it is desirable to have the volume performance as large as possible and the same at all transmitted frequencies. This follows from the requirement that the disturbances in each channel, arising from modulation and tube noise, be equal. If the line noise on the input grids is negligible compared to the tube noise and if tube noise and modualtion

* Bode, H. W.- (4)

*See Appendix - Fig. 3

BELL TELEPHONE LABORATORIES, INC.

Fig. 36

3000KC COAXIAL SYSTEM
LINE AMPLIFIER

ES-812716

ISS	DATE	APP
THIS DWG MADE FROM ES 784823		
1	11 10 39	A L S
2	3 4 40	B V K
3	4 5 40	B V K

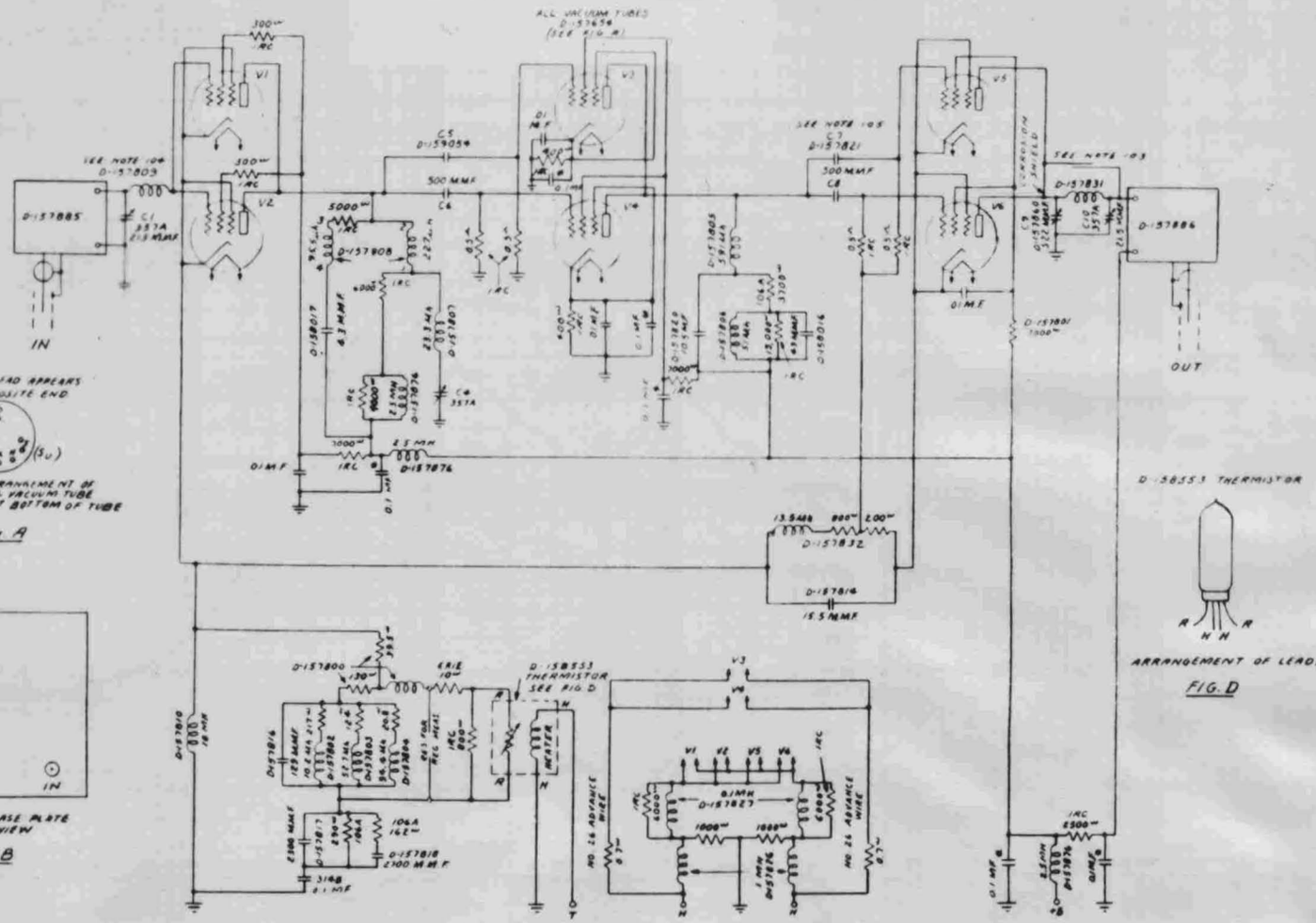

PLATE LEAD APPEARS AT OPPOSITE END

LEAD ARRANGEMENT OF D-157654 VACUUM TUBE LOOKING AT BOTTOM OF TUBE

FIG. A

AMPLIFIER BASE PLATE REAR VIEW

FIG. B

FIG. 1

VIEW OF POWER PLUG FROM WITHIN AMP.

FIG. C

ARRANGEMENT OF LEADS

FIG. D

NOTES

101 : ALL IRC RES PER KS-8038 & ALL .01 MF COND CORN DUB KS 7151

102 COND MARKED ⊕ ARE PART OF D-157823 RED LEAD COMMON GRD.

103 : PARALLEL WIRE TRIMMER COND

104 : TO BE REPLACED BY D-157831 AT CONVENIENCE OF W.E. CO

105 : TO BE REPLACED BY D-159054 AT CONVENIENCE OF W.E. CO.

106 : CORROSION SHIELD CONNECTED TO + B

PRINTED IN U.S.A.

Fig. 37

Beta Circuit Loss
and Phase
for
Line Amplifier

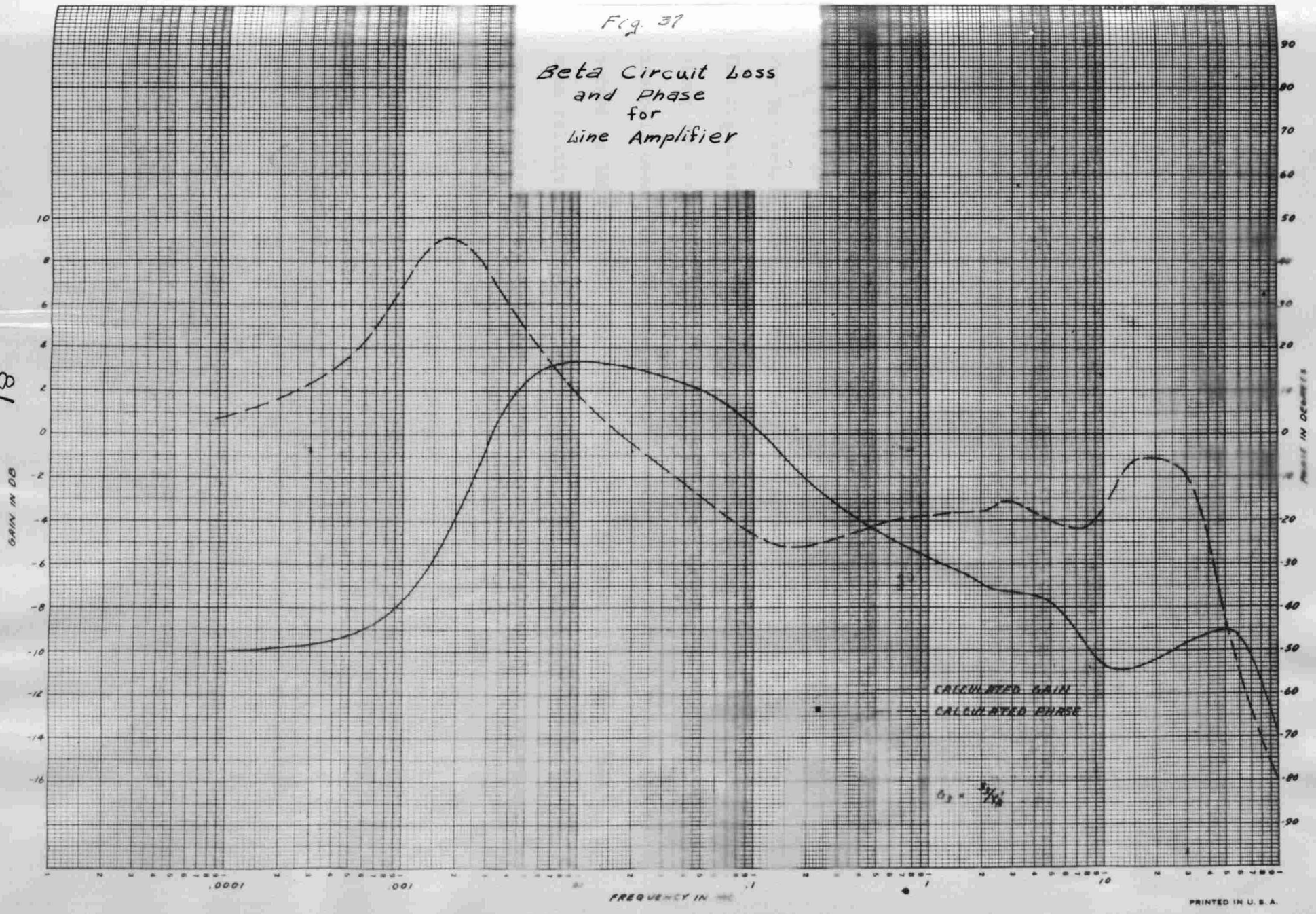

noise are to contribute equally to the systems noise then it can be shown that the gain from the input to the first grid and the gain from the output grid to the output should each compensate for one hald the cable loss."*

The concept of volume performance is similar to predistortion and compensation for radio broadcast work in the frequency modulation system or in audio systems where the effects of noise on the transmission efficiency of high frequency components may be nullified to a certain extent by such practices.

Fig. 38 gives the overall volume performance of the line amplifier. For perfection the curve would be a straight line on the o db axis. The characteristic from two to three megacycles is not too important since noise considerations in this region was originally ignored. It has only been since the mergence of television networks that thought has turned to this region. The region from 100 KC down to 60 KC is likewise relatively unimportant because noise fue to the cable and noise due to the amplifier are more or less equal.

MAXIMUM FEEDBACK

So far in this discussion it has been blandly assumed that the mu-beta product is large compared to unity at all frequencies. The question naturally arises as to what limits, if any, must be imposed on mu and beta and how these limits are determined. As a matter of practical design it has been shown by H. W. Bode that the limits of

*Elmendorf, C. H. - (7)

ES-795075

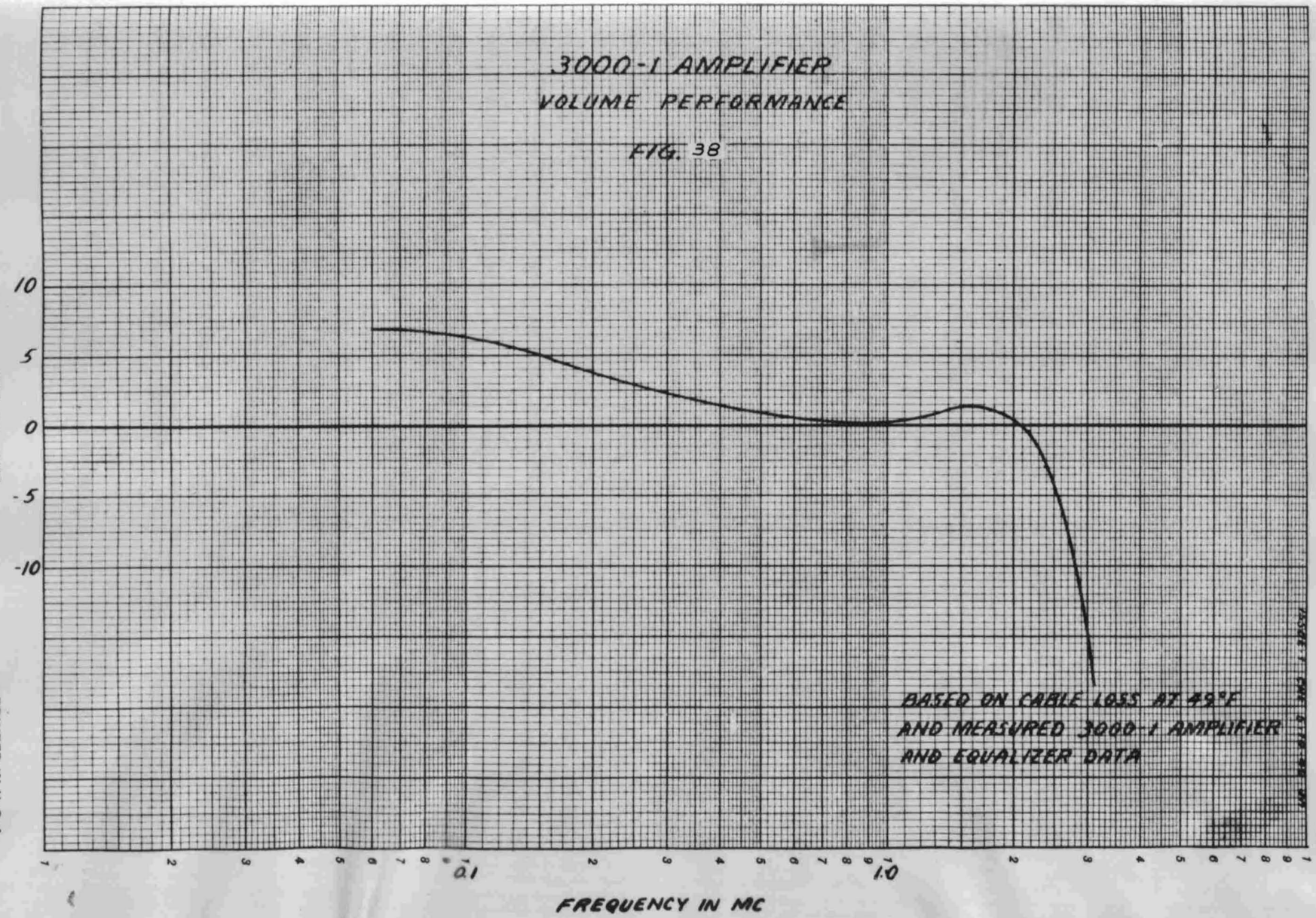

PRINTED IN U.S.A.

of mu-beta are in reality the limiting factor in feedback amplifier design.

It is a common experience of laboratory and field personnel that under the right conditions any amplifier will perform as an oscillator. This characteristic has been closely examined mathematically by Nyquist for feedback amplifiers.* He has found that there are two conditions for stability which he terms "unconditionally stable" and "conditionally stable". Concern will only be given to the "unconditionally stable" feedback amplifier. This amplifier is stable under all conditions. The criterion for such an amplifier is that the voltage gain of the feedback loop becomes and remains equal to or less than unity before the signal returned to the grid has an equal phase with the input signal. This characteristic may best be visualized by the example given by Fig. 39 which is the gain-phase relation of an "aux" amplifier measured by the author during a resident visit to Bell Telephone Laboratories.

The physical interpretation which H. W. Bode gives to the criterion is that the mu-beta gain of the amplifier will never approach unity until the frequency is so high that the amplifier elements have degenerated into capacitances or resistances. Under such conditions the amplifier works into a load composed of its own interelectrode capacities and other parasitics. The degeneration of such a circuit may be readily resolved by a skeletonized or block form of schematic. The resultant structure of the amplifier is termed the "asymtotic structure" and may be visualized by reference to Fig. 41. All admittances shown in the asymtotic structure are capacitive. Regardless of the configuration

*B.S.T.J. Volume XI July 1932 contains original paper by Nyquist

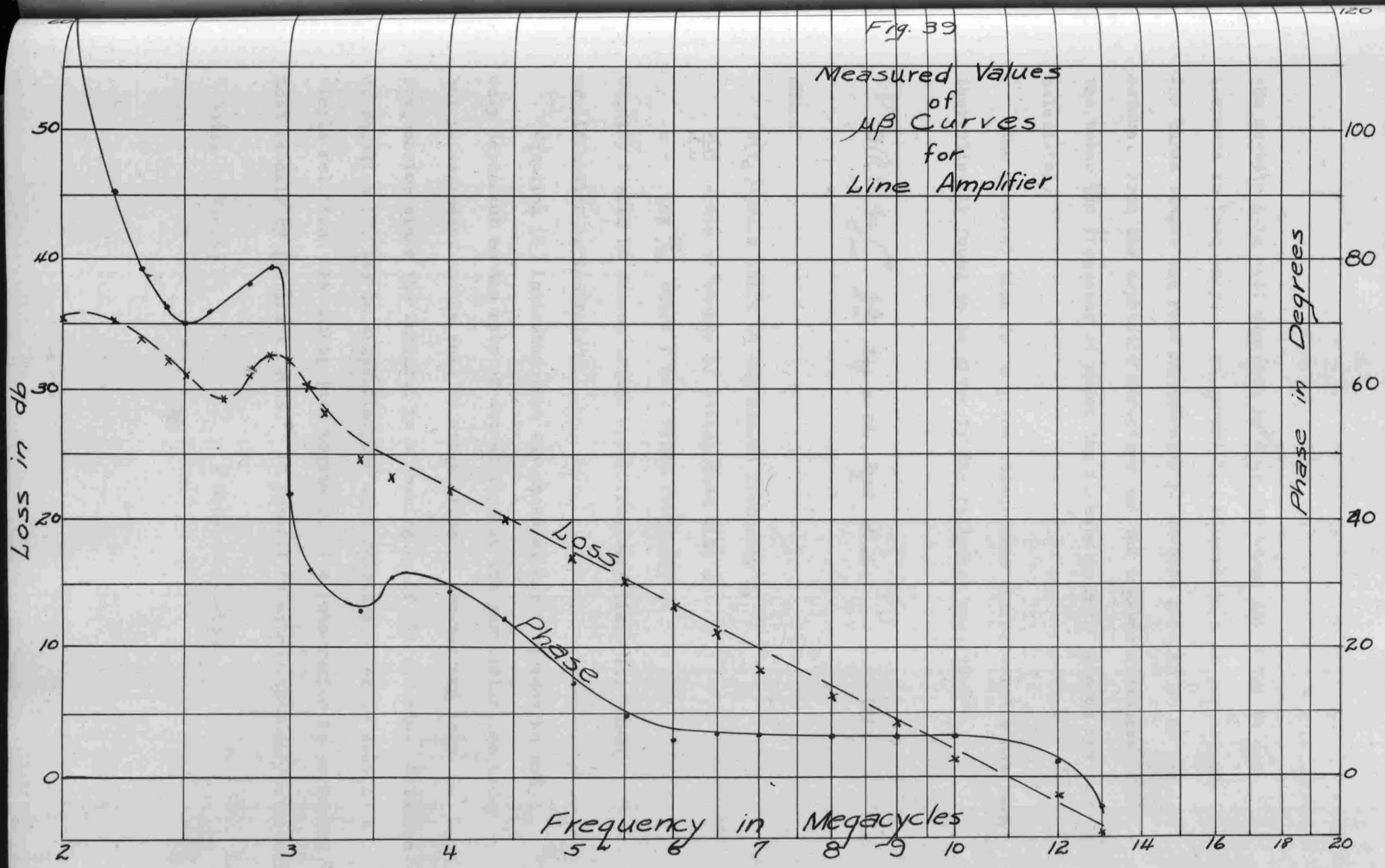
Fig. 39
Measured Values
of
μβ Curves
for
Line Amplifier
Loss in db
Phase in Degrees
Loss
Phase
Frequency in Megacycles
50
40
30
20
10
0
100
80
60
40
20
0
2
3
4
5
6
7
8
9
10
12
14
16
18
20

the mu-beta gain will decrease by 6 db per stage for a two to one increase in frequency; or as generally referred to 6 db per octave. For three stages the rate of decrease of mu-beta gain is 18 db per octave. From the asymtotic structure and the transconductances of the tubes the frequency at which the mu-beta gain is zero db may be calculated.

The phaserelation for a given attenuation characteristic has been theoretically found to be given by the following condition*

$$B(f_c) = \frac{1}{\pi}\int_{-\infty}^{\infty} \frac{dA}{du} \log \coth \frac{|u|}{2}\, du \qquad (8)$$

where

$B(f_c)$-phase shift at any chosen frequency f_c

$\frac{dA}{du}$ -rate of change of attenuation with u

u - $\log f/f_c$ where f is a fixed frequency

Usually f will be chosen as the upper frequency limit for which amplification is desired.

Equation (8) indicates that the phase at any frequency is not only dependent on the rate of attenuation at the particular frequency but is dependent on the rate of attenuation at greater and less frequencies since the integral is a summing up of all effects. Solution of equation (8) may be simplified for this reason however by solving s simple relations and adding them together. The integration is performed most readily by graphical means.* In general an attenuation characteristic

* Bode, H. W.-(5)

* Bode, H. W.-(5)

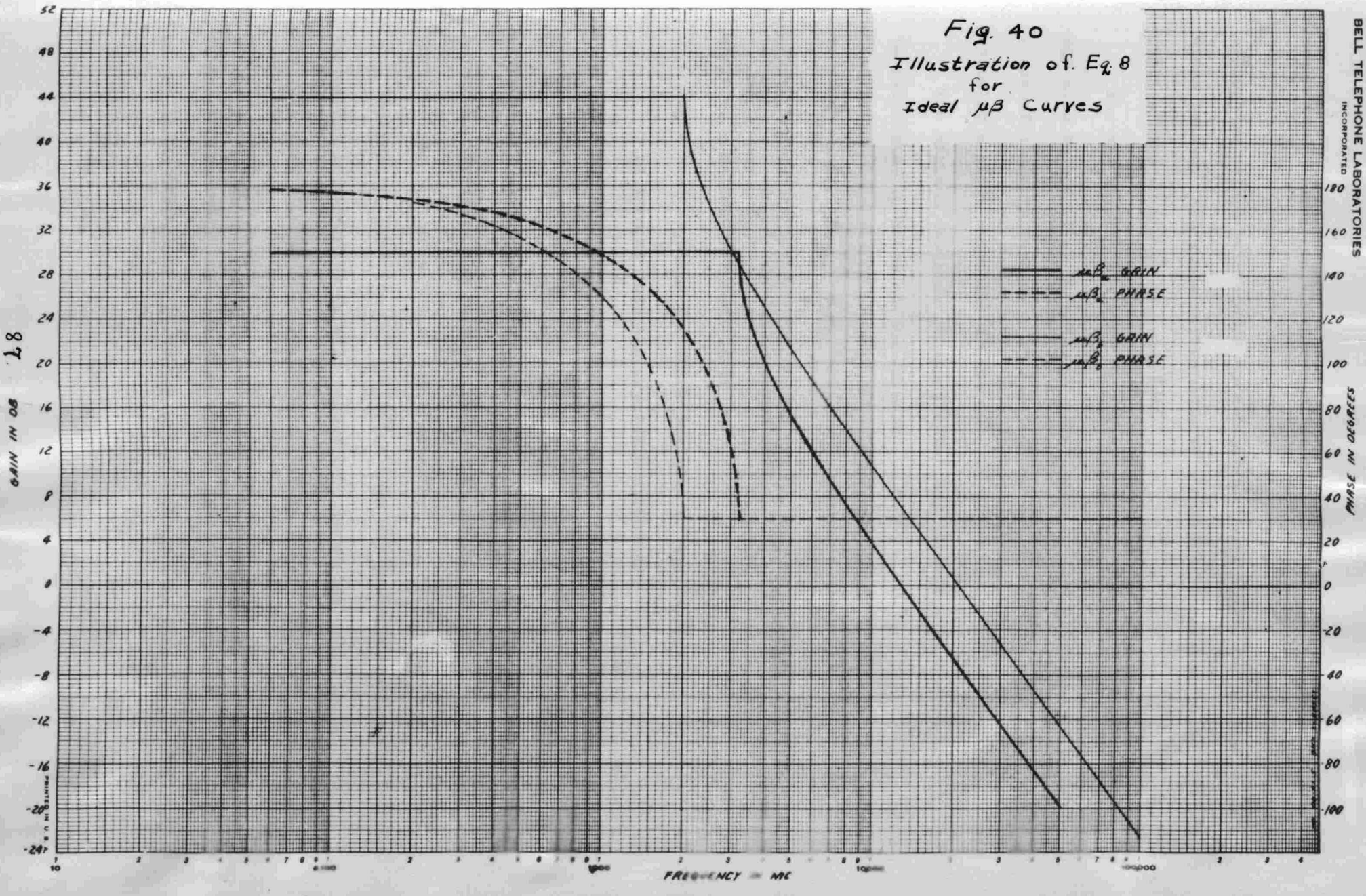

Fig. 40
Illustration of Eq. 8
for
Ideal $\mu\beta$ Curves

of constant slope corresponds to a constant phase shift and a constant gain of zero slope corresponds to a rapidly increasing phase shift of the nature of log coth $\frac{|u|}{2}$.

For any theoretical gain characteristic the phase characteristic may also be specified by means of equation (8). One criterion of a successful design becomes a realization of the desired gain at f, assuming a given asymtotic structure.

The maximum feedback obtainable for any asymtotic structure may be calculated by means of the formula

$$A_m = 40 \log_{10} \frac{4 f_a}{f_o} \qquad (9)$$

where A_m - maximum feedback in db

f_a - the frequency for which the gain of the amplifier is zero db into the asymtotic structure

f_o - the frequency limit of the useful bandwidth.

Equation (9) indicates that for a narrow band amplifier the amount of feedback may be very large. It also indicates that for a given asymtotic structure the maximum feedback is roughly inversely proportional to the logarithm of the bandwidth.

Indirectly, equation (9) indicates that any procedure which is successful in extending f_o will result in a more stable amplifier. The selection of a cathode feedback structure is successful in this respect since the capacities of the tube elements to ground may be somewhat minimized. It is interesting to note that the tubes used in the L1 amplifiers are installed without benefit of tube bases or

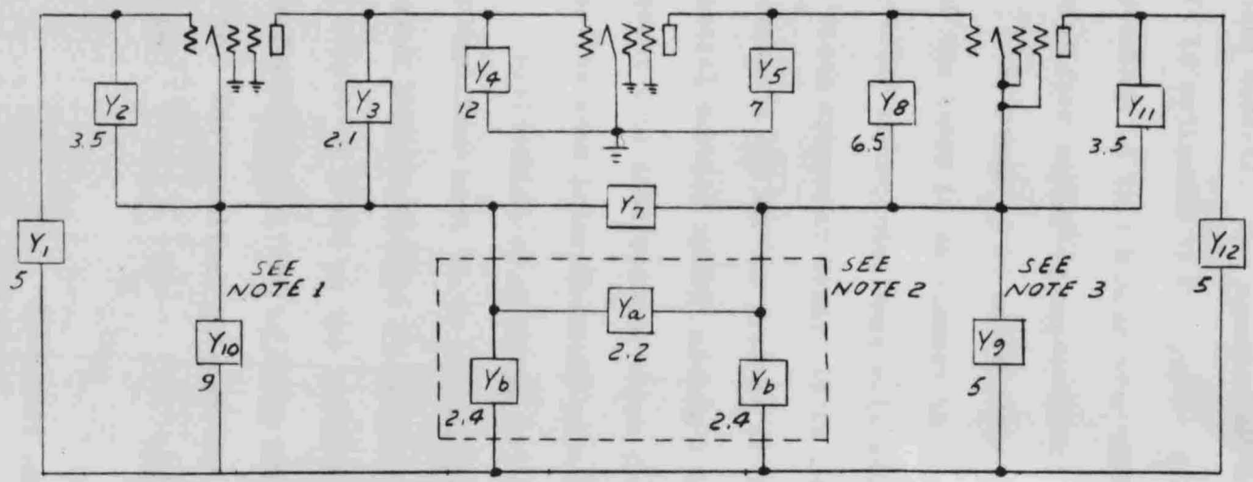

NOTES

1. THIS INCLUDES THE CATHODE TO GROUND CAPACITIES OF THE INPUT TUBES, THE CAPACITIES OF THE BETA CIRCUIT ELEMENTS TO GROUND, AND THE CAPACITY OF ONE SIDE OF THE LOCAL FEEDBACK NETWORK TO GROUND.

2. THIS IS THE EQUIVALENT STRUCTURE OF THE HEATER ISOLATING CIRCUIT INCLUDING THE HEATER TO CATHODE CAPACITIES, THE PARASITIC CAPACITIES OF THE COILS, AND THE HEATER TO GROUND CAPACITIES

3. THIS INCLUDES THE CATHODE TO GROUND CAPACITIES OF THE OUTPUT TUBES, THE CAPACITIES OF THE THIRD SCREEN BY-PASSING NETWORK TO GROUND AND THE CAPACITY OF ONE SIDE OF THE LOCAL FEEDBACK NETWORK TO GROUND.

4. EACH STAGE HAS TWO 7650-R TUBES IN PARALLEL GIVING A NOMINAL TRANSCONDUCTANCE OF 4000 MICROMHOS PER STAGE.

5 NUMBERS ARE THE PARASITIC CAPACITIES IN MICRO MICRO FARADS

ISSUE 1 5-2-40

89

APPL.	DR. M	CH.
	TR.	ENG.

TITLE 3000-1 AMPLIFIER ASYMPTOTE STRUCTURE FIG. 41

SCALE

BELL TELEPHONE LABORATORIES, INC., NEW YORK

ES-795054

PRINTED IN U.S.A.

tube sockets. The connections are made by soldering the tube leads. It is estimated that approximately 500 KC of effective band width has been obtained in this manner over what could be achieved for as stable an amplifier employing conventional tubes.

Although it is not apparent from equation (9) the transconductance of the tubes is an element in the stability of feedback amplifiers since greater transconductance will maintain the gain greater than zero db over a wider frequency band. It is interesting to note that the Bell Telephone Company is now in the process of developing feedback amplifiers for a coaxial carrier system having a maximum frequency of 7 mc as a result of recent tube developments which provide about twice the transconductance for the same interelectrode capacities.

Application of equation (9) will indicate what the forward gain of an amplifier must be to provide the maximum allowable feedback. For narrow band amplifiers it may be that the maximum allowable feedback is almost as great as the possible forward gain. For the L1 amplifiers the forward gain, mu, is about 80 db while the feedback is roughly 40 db. The resultant gain of the amplifier is therefore approximately 40 db.

STABILITY AND NOISE

The chief reason, of course, for the selection of a feedback circuit for amplification is that a high degree of stability is achieved. If the mu-beta product is large any variation in mu of a minor nature will not affect the overall gain of the amplifier. The gain is solely

a function of the beta circuit loss which may be made quite stable with the selection of stable elements. This means in effect that changes in tubes due to age will have no effect on the characteristic of the amplifier, and wide variations in plate voltage will likewise have a negligible effect on the performance. These considerations are of paramount interest where as many as 500 to 700 amplifiers are to be connected in series for a 3000 to 4000 mile transmission system corresponding to a continental coast to coast connection.

The effect of noise on amplifier performance is also of importance. Generally speaking the factor most responsible for amplifier noise is the input resistance. While feedback has no control over noise generated at the input to an amplifier it definitely limits the effects of noise generated internally. It has been found that the signal-tO-noise ratio at the output of a feedback amplifier bears the following relation to the output signal-to-noise ratio of a non-feedback amplifier where both have the same power output.*

$$(S/N)_{1-2} = \frac{a_o}{a}\,(1-\mu\beta) \qquad (10)$$

where $(S/N)_{1-2}$ signal to noise ratio of feedback to non-feedback amplifier.

a_o -gain from source of noise to output for feedback

a -gain from source of noise to output for non-feedback

As an example consider the case of power supply hum on the plates of the output stage. The ratio of $\frac{a_o}{a}$ is one in this case, and the

* Black, H. S. - (3)

feedback amplifier has a greater signal-to-noise ratio of $\frac{1-\mu\beta}{1}$ over the non-feedback amplifier. In the case of L1 amplifiers with mu-beta approximately equal to 100 the ratio of the increase is 99:1.

L1 SYSTEM AMPLIFIERS

1. Receiving.

The amplifier which is shown in Fig. 36 is the line amplifier for the L1 system. Although it is representative of all four amplifiers used, there are minor departures in design which need to be enumerated. The receiving amplifier is similar in all respects to the line amplifier with the exception of the input and output networks. The receiving amplifier output network is 72 ohms; designed to work into a 72 ohm load and to have a flat frequency response. The input network to the receiving amplifier is slightly different from that of the line amplifier. Connected in tandem the volume performance for a section beginning with a transmitting amplifier and ending with a receiving amplifier, regardless of the number of intervening line amplifiers, (a T-R section) is flat with frequency. A typical receiving amplifier characteristic is shown by Fig. 41. The receiving amplifier has the same beta circuit as the line amplifier.

2. Transmitting

The transmitting amplifier has a 72 ohm input circuit which is flat with frequency. The output circuit is, as explained above, a step-up transformer having a variable impedance with frequency.

It is evident that one half of the volume performance of the extra length of coaxial in a T-R section is made up by the output transformer of the transmitting amplifier and one-half by the input transformer of the receiving amplifier. The transmitting amplifier does not have a variable beta circuit. A single 82 ohm resistor is used as the beta circuit element. No regulation of the transmitting amplifier is therefore used. The typical characteristic of a transmitting amplifier is shown by Fig. 42.

3. Flat gain.

The flat gain amplifier is terminated in transformers which have a uniform impedance of 72 ohms over the band of carrier frequencies. The beta circuit is also a single 82 ohm resistor. Its gain is flat at 40 db over the entire frequency range.

4. Overall.

The overall characteristic of a T-R section due to the repeaters is shown in Fig. 43. It may be observed that the gain is practically flat at 40 db from 64 KC to 2400 Kc and then gradually decreases to 32 db at 3mc. This curve is therefore the general shape of the loss which the A equalizer must provide if the flat-gain amplifier has a flat characteristic. The overall transmission from switchboard-to-switchboard regardless of thenumber of intervening T-R sections will be flat with frequency. The <u>level</u> gives the power present in dbm if the signal at the transmitting switchboard is odbm or one milliwatt.

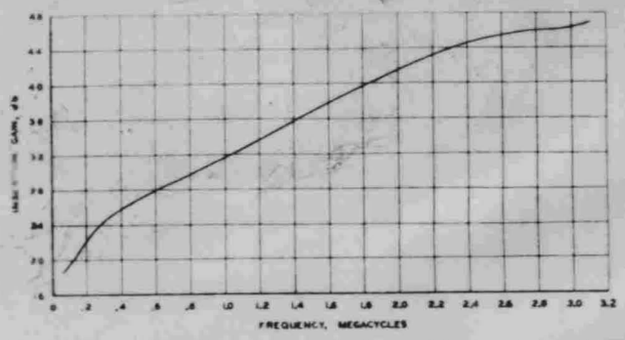

Fig. 42 - Typical Gain-frequency Characteristic of Receiving Amplifier in Tandem with an Input Power Separation Filter

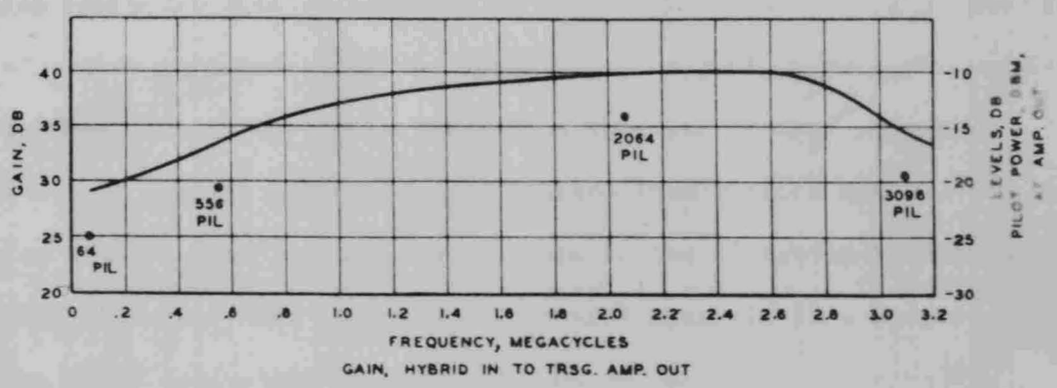

Fig. 43 - Gain from Input of Hybrid Coil to Output of Transmitting Amplifier, and Transmission Levels and Pilot Powers at the Output of the Transmitting Amplifier or Auxiliary Amplifier

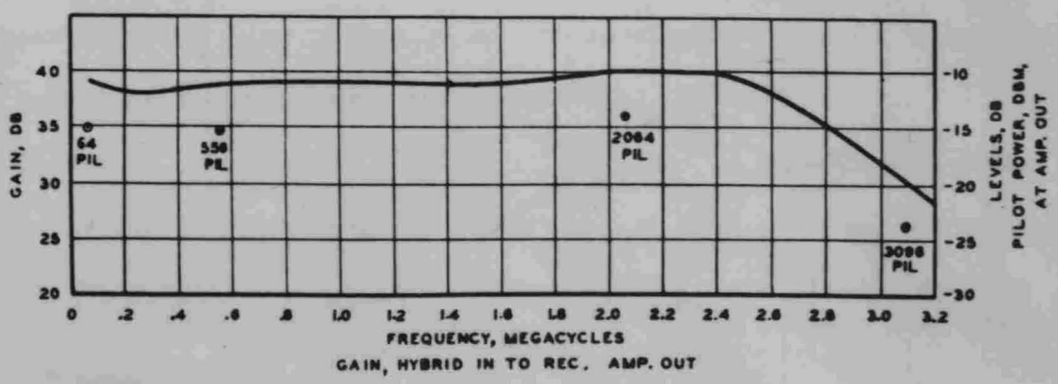

Fig. 43b Typical Gain-frequency Characteristic of a Line Section, Hybrid In to Receiving Amplifier Out, and Levels at Receiving Amplifier Out

CHAPTER IX

CROSSTALK (INTRODUCTION)

A coaxial cable is a very effective transmission component because of the enclosed nature of the electromagnetic energy. The outer conductor becomes a shield against external interference, the effectiveness of which increases with an increase of frequency. The outer conductor is also effective in maintaining the isolation of signals within the coaxial from external cricuits. These properties have led to the universal acceptance of coaxial cables as an efficient transmission medium.

The coaxial line was adapated for use in the L1 system because of the above features. The inclusion of several coaxials in a single cable with the outer conductors in physical contact, as has been shown,* contributes toward an advantageous system of power supply. This same configuration however provides for the possibility of common impedances between coaxial lines. The serious effects of these common impedances is nullified by an increase in the frequency of transmission. It is in the lower frequency spectrum where these common impedances become troublesome and an investigation of the effects has been carried out by both theoretical and experimental means. The accuracy of the theoretical attack has been verified experimentally and its development will be treated in some detail in the following paragraphs.

Crosstalk in one cable due to a disturbance in an adjacent cable physically bonded to the first, in conjunction with external disturbances against which shielding by the outer conductor is not effective, has

*Chapter VII

limited the lower extremity of the L1 carrier band to 60 KC. The following paragraphs will endeavor to describe the reasons for this limitation.

PRELIMINARY CONSIDERATIONS

It is perhaps wise to understand first a few quantitative facts concerning the coaxials in question. The cables to be considered are those for which characteristics are shown in the appendix. The inner diameter of the outer conductor is .375 inches and the wall thickness is .010 inches. The repeater spacing for this coaxial is nominally 7.9 miles. Each coaxial has a steel tape wound helically about it which allows for an open space, which is covered by a second steel tape leaving no exposed copper surface. Two, four, six, or eight coaxials are placed in a single cable with their outer steel tapes in rigid physical contact. Four coaxials per cable are presently being installed. Six and eight coaxial cables will be installed as the need arises. Of the four coaxials two are reserved generally for spares, one for each direction of transmission. About the inner core of coaxials a layer of insulation is placed with a number of quads, usually of nineteen or twenty-two gage, wound adjacent to it. The core for the coaxials is made up of alarm pairs and local order wires. Insulation is then wound about the entire assembly and finally sealed in a lead sheath.

The phase constant, β, of this coaxial is given at 50 KC to be 2.2557 radians per mile. The total phase change in 7.9 miles will be about 17.8 radians, or 17.8 radians per repeater section. The electrical

length at 50 KC will therefore be $\frac{17.8}{2\pi}$ or 2.84 wavelengths. At 3 mc β is 108.52 radians per mile. The electrical length is therefore $\frac{108.52}{2\pi} \times 7.9$ or 137 wavelengths. At 500 KC the electrical length is $\frac{18.268}{2\pi} \times 7.9$ or 23 wavelengths, It is reasonably safe to assume therefore that the electrical length of the line is long over the entire frequency range.

The depth of penetration of the signals into the outer conductor is an interesting criterion of effective shielding. For copper conductors the depth of penetration, S, in inches is given by $2.61/\sqrt{F}$. At 60 KC S will be .00986 inches. At 500 KC S will be .0037 inches, and at 3 mc S will be .00147 inches. There seems to be ample reason for predicting crosstalk.

The characteristic impedance of the line varies from 78.5 ohms at 60 KC to 75.5 ohms at 3 mc with respective phase angles of 2.88° and .32°. For purposes of approximate calculation it may be assumed that the line has a characteristic impedance of 75 ohms resistance.

It was pointed out in the previous chapter that the coaxial is not terminated. The relations developed in the following paragraphs assume in most instances that the coaxial is terminated in its characteristic impedance. It is expected then that calculations based on the developed relations will be in error. The magnitude of these errors will be examined qualitatively.

At 60 KC the attenuation factor is approximately one neper per mile, and at 3 mc it is 6.7 nepers per mile, and at 500 KC it is 2.75 nepers per mile. Corresponding losses in db for a 7.9 mile line will be 68.5, 460, and 189. The necessity for volume performance characteristics can be readily appreciated from these figures.

CROSSTALK BETWEEN TWO COAXIALS

1. Near End Crosstalk.

The development of crosstalk relations will be for an idealized case which does not necessarily apply to the configuration of the L1 coaxials. The development is based on the assumptions shown by Fig. 44 where two coaxials are in physical contact and a voltage E is introduced

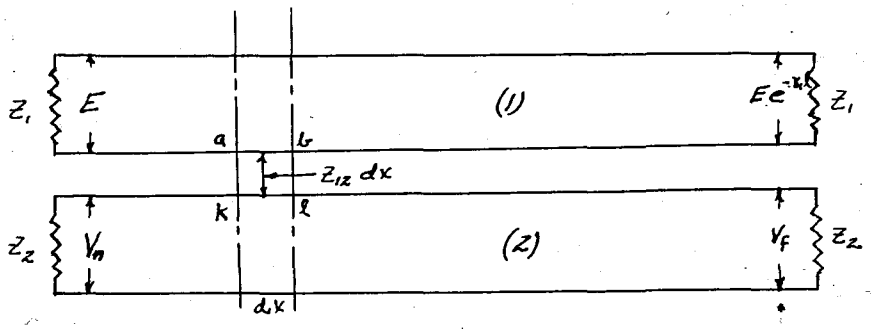

Fig. 44 Crosstalk Schematic for Two Coaxials

in one of them. As a general case the propagation constants γ_1, and γ_2 are different. The ratio $\frac{V_n}{E}$ is defined as the near end crosstalk and the ratio $\frac{V_{fr}}{Ee^{-\gamma_1 l}}$ is defined as the far end crosstalk. The mutual impedance Z_{12} is defined as the ratio of the voltage induced in line (2) as a result of a current in line (1) and is given in ohms per unit of length. The mutual impedance between points a-k and b-l will therefore be $Z_{12}\,dx$. The type of crosstalk present for the lines in Fig. 41 is termed direct crosstalk since it will be found that the voltage ratios specified will be directly dependent on Z_{12}.

The development for near end crosstalk follows with the assumption that Z_1 and Z_2 are characteristic impedances of the respective coaxials. To produce a voltage E the current through Z_1 must be also the current between points a and b. Therefore due to propagation along the line.

$$i_{at} = \frac{E e^{-\gamma_1 x}}{z_1} \qquad (1)$$

Due to the definition of z_{12} therefore the voltage between points K and 1 of the second coaxial must be

$$e_{kl} = i_{at}\, z_{12}\, df = \frac{E e^{-\gamma_1 x}}{z_1} z_{12}\, df \qquad (2)$$

The current in section Kl is the

$$i_{kl} = \frac{e_{kl}}{2 z_2} = \frac{E e^{-\gamma_1 x}}{2 z_1 z_2} z_{12}\, df \qquad (3)$$

since the line at either end of the section Kl is the characteristic impedance z_2 . Therefore the current at the left end of line (2) due to e_{kl} is

$$(i_{kl})_n = i_{kl}\, e^{-\gamma_2 x} = \frac{E z_{12}}{2 z_1 z_2} e^{-(\gamma_1+\gamma_2)x}\, df \qquad (4)$$

The voltage dV_n due to the disturbance X units away is

$$dV_n = (i_{kl})_n\, z_2 = \frac{E}{2 z_1} z_{12}\, e^{-(\gamma_1+\gamma_2)x}\, df \qquad (5)$$

And the total voltage may be obtained by integration of (5) to give

$$V_n = \int_0^{\ell} dV_n = \int_0^{\ell} \frac{E}{2Z_1} Z_{12} e^{-(\gamma_1+\gamma_2)x} dx, \tag{6}$$

$$V_n = E \frac{Z_{12}}{2Z_1} \cdot \frac{1-e^{-(\gamma_1+\gamma_2)\ell}}{\gamma_1+\gamma_2} \tag{7}$$

The near end crosstalk is then given by the ratio

$$N_{12} = \left(\frac{V_n}{E}\right)_{12} = \frac{Z_{12}}{2Z_1} \frac{1-e^{-(\gamma_1+\gamma_2)\ell}}{\gamma_1+\gamma_2} \tag{8}$$

By the reciprocity theorem $N_{12} = N_{21} = N$, and if $Z_1 = Z_2 = Z_0$; $\gamma_1 = \gamma_2 = \gamma_c$

equation (8) becomes

$$N = \frac{V_n}{E} = \frac{Z_{12}}{2Z_0} \frac{1-e^{-2\gamma_c \ell}}{2\gamma_c} \tag{9}$$

For the distances of the L1 repeater spacing and 60 KC $\alpha\ell$ is 7.9 nepers. The exponetial then becomes small compared to unity and equation (9) may be written

$$N = \frac{Z_{12}}{2Z_0} \frac{1}{2\gamma_c} \tag{10}$$

Equation (10) therefore shows that for the L1 repeater spacing the

near end crosstalk is independent of the length of the line.

Equation (10) has been derived on the basis of terminated lines. Suppose then that the lines are not terminated in their characteristic impedances, which is the practical case. Fig. 45 illustrates such a condition. An equation which results from the general long lines

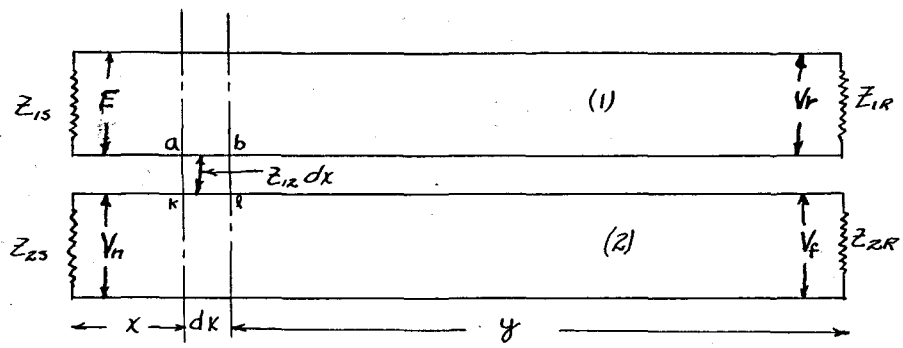

Fig. 45 Crosstalk Schematic for two Unterminated Coaxials

condition will be useful. This equation is

$$I^- = -I^+ \Gamma_R \, e^{-2\gamma d} \qquad (11)$$

where I^- represents the wave traveling in the direction of increasing d, I^+ represents the wave traveling in the direction of decreasing d, and Γ_R is the reflection coefficient at $d = 0$. For a given voltage present on the line at the near end a current source may be substituted as before to give the near end current which is composed of two parts,

$$i_n = \frac{E}{Z_{1S}} = i_n^+ + i_n^- = i_n^+\left(1 - \Gamma_{1R}\, e^{-2\gamma y}\right) = \qquad (12)$$
$$i_n^+\left(1 - \Gamma_{1R}\, e^{-2\gamma l}\right) \text{ since at end } y = l$$

The current at section a-b may be broken up into the sum of two parts

$$i_{ab} = i_{ab}^{+} + i_{ab}^{-} = i_{ab}^{+}\left(1 - \Gamma_{1R}\, e^{-2\gamma y}\right) \qquad (13)$$

The relation of i_n to i_{ab} may be summarized thus

$$i_{ab}^{+} = i_n^{+}\, e^{-\gamma x} \qquad (14)$$

The current i_{ab} may then be written from (12) and (14)

$$i_{ab} = i_{ab}^{+}\left(1 - \Gamma_{1R}\, e^{-2\gamma y}\right) \quad i_{ab} = i_n^{+} e^{-\gamma x}\left(1 - \Gamma_{1R}\, e^{-2\gamma y}\right) =$$

$$i_n \; \frac{1 - \Gamma_{1R}\, e^{-2\gamma y}}{1 - \Gamma_{1R}\, e^{-2\gamma l}} \; e^{-\gamma x} \qquad (15)$$

The voltage e_{kl} may now be found

$$e_{kl} = Z_{12}\, i_{ab}\, dx = \frac{E}{Z_{13}}\, Z_{12}\, \frac{1 - \Gamma_{1R}\, e^{-2\gamma y}}{1 - \Gamma_{1R}\, e^{-2\gamma l}}\, e^{-\gamma x}\, dx \qquad (16)$$

From similarity to equations (12), (13), and (14) the current at the <u>receiving</u> end $(i_{kl})_{n2}$ due to a source at section kl may be written

$$i_{n2} = i_{n2}^{+} + i_{n2}^{-} = i_{n2}^{+}\left(1 - \Gamma_{2S}\, e^{-2\gamma x}\right) = i_{n2}^{+}\left(1 - \Gamma_{2S}\right) \text{ since}$$

$$x = 0 \text{ at receiving end.} \qquad (17)$$

Then as before the current in section Kl is

$$i_{kl} = i_{kl}^{+} + i_{kl}^{-} = i_{kl}^{+}\left(1 - \Gamma_{2S}\, e^{-2\gamma x}\right) \qquad (18)$$

And the relation between i_{kl} and i_{n2} is

$$i_{kl}^{+} = i_{n2}^{+} \; e^{\gamma x} \qquad (19)$$

Then by substitution

$$i_{n2} = i_{n2}^{+}(1-T_{2s}) = i_{kl}^{+} \; e^{-\gamma x}(1-T_{2s}) = i_{kl} \; \frac{e^{-\gamma x}(1-T_{2s})}{(1-T_{2s}e^{-2\gamma x})} \qquad (20)$$

The current i_{kl} is a result of the voltage e_{kl} , thus

$$i_{kl} = \frac{e_{kl}}{Z'_{2s} + Z'_{2R}} \qquad (21)$$

where

$$Z'_{2s} = Z_c \; \frac{1+T_{2s}e^{-2\gamma x}}{1-T_{2s}e^{-2\gamma x}} \qquad Z'_{2R} = Z_c \; \frac{1+T_{2R}e^{-2\gamma y}}{1-T_{2R}e^{-2\gamma y}}$$

and Z_c is the characteristic impedance of both lines. Therefore the final solution for i_{n2} becomes

$$i_{n2} = \frac{E Z_{12}}{Z_{13} Z_c} \; \frac{1-T_{1R}e^{-2\gamma y}}{1-T_{1R}e^{-2\gamma l}} \; \frac{e^{-\gamma x} \; e^{-\gamma x}(1-T_{2s})}{(1-T_{2s}e^{-2\gamma x})} \times$$

$$\frac{(1-T_{2s}e^{-2\gamma x})(1-T_{2R}e^{-2\gamma y}) \; dy}{(1+T_{2s}e^{-2\gamma x})(1-T_{2R}e^{-2\gamma x}) + (1+T_{2R}e^{-2\gamma y})(1-T_{2s}e^{-2\gamma x})} = \frac{E Z_{12}}{Z_c Z_{12}} \qquad (22)$$

$$\frac{1-T_{2s}}{1-T_{1R}e^{-2\gamma l}} \; \frac{e^{-2\gamma x}(1-T_{1R}e^{-2\gamma y})(1-T_{2R}e^{-2\gamma y}) \; dy}{(1+T_{2s}e^{-2\gamma x})(1-T_{2R}e^{-2\gamma x}) + (1+T_{2R}e^{-2\gamma y})(1-T_{2s}e^{-2\gamma x}}$$

which may be simplified as follows

$$i_{n2} = K \; \frac{e^{-2\gamma x}(1-T_{1R}e^{-2\gamma y} - T_{2R}e^{-2\gamma y} + T_{1R}T_{2R}e^{-4\gamma y})}{2\left[1-T_{2R}T_{2s}e^{-2\gamma(x+y)}\right]} \, dy \qquad (23)$$

and $x+y = x+l-x = l$

$$i_{n2} = K' e^{-2\gamma x}\left(1 - \Gamma_{1R}\, e^{-2\gamma l} e^{2\gamma x} - \Gamma_{2R}\, e^{-2\gamma l} e^{2\gamma x} + \Gamma_{1R}\Gamma_{2R}\, e^{-4\gamma l} e^{2\gamma x}\right) dx \qquad (24)$$

Therefore the incremental voltage dV_n is

$$dV_n = i_{n2} Z_{2S}$$

and by integration V_n becomes

$$V_n = \int_0^l dV_n = K' Z_{2S}\left[\frac{e^{-2\gamma x}}{-2\gamma} - \Gamma_{1R}\, e^{-2\gamma l} x - \Gamma_{2R}\, e^{-2\gamma l} x + \Gamma_{1R}\Gamma_{2R}\, e^{-4\gamma l} \frac{e^{2\gamma x}}{2\gamma}\right]_0^l$$

$$= K' Z_{2S}\left[-\frac{1}{2\gamma}\left(e^{-2\gamma l} - 1\right) - l\left(\Gamma_{1R} + \Gamma_{2R}\right) e^{-2\gamma l} + \Gamma_{1R}\Gamma_{2R}\, e^{-4\gamma l}\left(\frac{e^{2\gamma l} - 1}{2\gamma}\right)\right] \qquad (25)$$

$$\frac{V_n}{E} = \frac{Z_{12} Z_{2S}}{2 Z_c Z_{1S}} \; \frac{1 - \Gamma_{2S}}{1 - \Gamma_{1R} e^{-2\gamma l}} \; \frac{1}{\left(1 - \Gamma_{2R}\Gamma_{2S}\, e^{-2\gamma l}\right)} \left[\frac{1 - e^{-2\gamma l}}{2\gamma}\left\{1 - \Gamma_{1R}\Gamma_{2R}\, e^{-4\gamma l}\right\} - \left(\Gamma_{1R} + \Gamma_{2R}\right) l\, e^{-2\gamma l}\right]$$

Equation (25) which expresses the crosstalk for lines not terminated in their characteristic impedances presents a formidable configuration. If it is assumed as before however that the lines are long, then for any reflection coefficient up to but not including unity a simplified form may be written as

$$\frac{V_n}{E} = \frac{Z_{12} Z_{2S}}{2 Z_c Z_{1S}} \; \frac{(1 - \Gamma_{2S})}{2\gamma} \qquad (26)$$

Equation (26) indicates that the near end crosstalk may be either increased or decreased depending on the reflection coefficient at the

near end of the second line. Qualitatively it may be stated that near end crosstalk is less for a real positive reflection coefficient of the same magnitude. This condition is met when the ratio of resistance is also the ratio of reactances for the termination and the line characteristic impedance. For a pure resistive characteristic impedance the termination must also be resistive to meet the above requirements.

It has been found that for a two coaxial cable the near end crosstalk is much more important than the far end crosstalk for different directions of transmission. For the same direction of transmission the far end crosstalk becomes more important, and for any cable having more than two coaxials the far end crosstalk controls. The rate at which crosstalk builds up with the number of line sections is generally the controlling factor in crosstalk ratios rather than the crosstalk due to one individual section. The question of unterminated lines therefore becomes more academic than practical and will not be pursued further. Moreover in all tests during which crosstalk is measured, instruments are generally used which terminate the lines. This is the only direct method for comparison of the crosstalk with previous or future measurements of other coaxial systems.

2. Far End Crostalk

By a similar method as used above, the far end crosstalk may be computed for two identical coaxials in physical contact and terminated in their characteristic impedance to be

$$F = \frac{V_f}{Ee^{-\gamma l}} = \frac{Z_{12}}{2Z_0}\, l \qquad (27)$$

This equation indicates that the far end crosstalk may be the most severe condition for long lines. Equation (27) indicates that all of the energy will eventually be in the second line if their extent is very long. The effect of the second line on the first was not accounted for by the above derivations, however, and the limiting condition will be imposed when one half the energy appears in each coaxial.

Equation (27) was derived on the basis of two lines in physical contact as given by Fig. 44. It may be also derived in a different fashion by considerations of the conditions given by Fig. 46, where a tertiary circuit is the medium by which a disturbance in one line reaches and affects the other line.

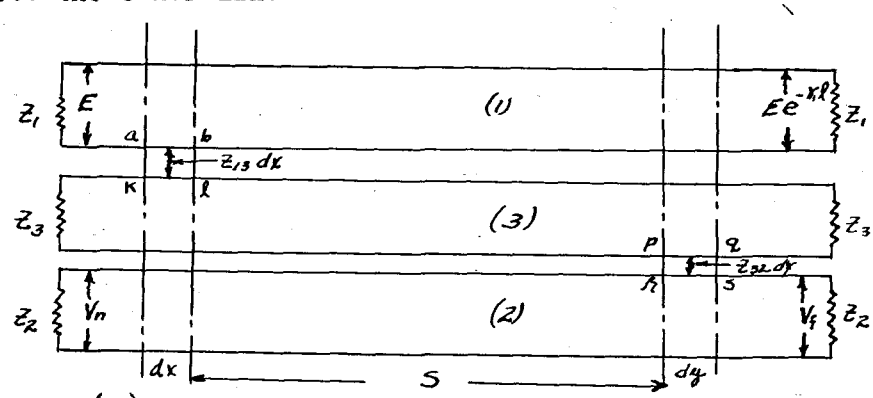

Fig. 46 Crosstalk Schematic for a Tertiary Circuit

From equation (3) the current in the section k l is

$$i_{kl} = \frac{e_{kl}}{2Z_2} = \frac{Ee^{-\gamma_1 x}}{2Z_1 Z_3} Z_{13}\, dx \qquad (28)$$

The current at any other section p-q due to the current induced at section k-l will be

$$i_{pq} = i_{kl}\, e^{-\gamma_3 s} = \left(\frac{Ee^{-\gamma_1 x}}{2Z_1 Z_3} Z_{13}\, dx\right)\left(e^{-\gamma_3 s}\right) \qquad (29)$$

where s=y-x.

The total current in the third circuit then is a sum over the length.

$$I_3 = \int_0^{l} \frac{E e^{-\gamma_1 x} e^{-\gamma_3 s} z_{13}}{2 z_1 z_3} \, dx = \int_0^{l} i_{pq} \qquad (30)$$

To get the effect of the total length of the first line on the third line the integration must be performed in two steps. For $x<y, s=y-x$; however for $x>y$, $s=x-y$. Therefore equation (30) is

$$I_y \int_0^{y} \frac{E z_{13}}{2 z_1 z_3} e^{-\gamma_1 x} e^{-\gamma_3 (y-x)} \, dx + \int_y^{l} \frac{E z_{13}}{2 z_1 z_3} e^{-\gamma_1 x} e^{-\gamma_3 (x-y)} \, dx \qquad (31)$$

which becomes

$$I_y = \frac{E z_{13}}{2 z_1 z_3} \left[\frac{e^{-\gamma_1 y} - e^{-\gamma_3 y}}{\gamma_3 - \gamma_1} + \frac{e^{-\gamma_1 y} - e^{-\gamma_3 y} e^{-(\gamma_3 + \gamma_1) l}}{\gamma_3 + \gamma_1} \right] \qquad (32)$$

The voltage introduced into the second line due to current in the third is

$$E_y = z_{32} I_y \, dy \qquad (33)$$

Due to the terminated nature of the second line one-half of this voltage starts toward either end of the line and is attentuated in progress, therefore

$$dV_f = \frac{1}{2} z_{32} \frac{E z_{13} e^{-\gamma_2 s}}{2 z_1 z_3} \left[\frac{e^{-\gamma_1 y} - e^{-\gamma_3 y}}{\gamma_3 - \gamma_1} \quad \frac{e^{-\gamma_1 y} - e^{-\gamma_3 y} e^{-(\gamma_3 + \gamma_1) l}}{\gamma_3 + \gamma_1} \right] dy \qquad (34)$$

and integrating (34) since s= 1-y

$$V_f = \frac{1}{2} Z_{32} \frac{E Z_{13}}{2 Z_1 Z_3} e^{-\gamma_2 l} \left[\frac{2\gamma_3}{\gamma_1 - \gamma_2} \frac{1-e^{-(\gamma_1-\gamma_2)l}}{\gamma_3^2 - \gamma_1^2} - \frac{1-e^{-(\gamma_3-\gamma_2)l}}{(\gamma_3-\gamma_1)(\gamma_3-\gamma_2)} \right.$$

$$\left. + \frac{1-e^{(\gamma_3+\gamma_2)l}}{(\gamma_3+\gamma_1)(\gamma_3+\gamma_2)} e^{-(\gamma_3+\gamma_1)l} \right] \qquad (35)$$

and the far end crosstalk value becomes

$$F = \frac{V_f}{E e^{-\gamma_1 l}} = \frac{Z_{13} Z_{32}}{4 Z_1 Z_3} e^{-(\gamma_2-\gamma_1)l} \left[\frac{2\gamma_3}{\gamma_3^2 - \gamma_1^2} \frac{1-e^{-(\gamma_1-\gamma_2)l}}{\gamma_1-\gamma_2} - \right.$$

$$\left. \frac{1-e^{-(\gamma_3-\gamma_2)l}}{(\gamma_3-\gamma_1)(\gamma_3-\gamma_2)} + \frac{1-e^{(\gamma_3+\gamma_2)l}}{(\gamma_3+\gamma_1)(\gamma_3+\gamma_2)} e^{-(\gamma_3+\gamma_1)l} \right] \qquad (36)$$

For equal attentuation constants and characteristic impedances

$$\gamma_1 = \gamma_2 = \gamma \quad Z_1 = Z_2 = Z_0 \quad Z_{13} = Z_{32}$$

$$F = \frac{(Z_{13})^2}{4 Z_0 Z_3} \left[\frac{2\gamma_3 l}{\gamma_3^2 - \gamma^2} - \frac{1-e^{-(\gamma_3-\gamma)l}}{(\gamma_3-\gamma)^2} - \frac{1-e^{-(\gamma_3+\gamma_1)l}}{(\gamma_3+\gamma)^2} \right] \qquad (37)$$

since $\lim_{\gamma_2 \to \gamma_1} \left\{ \frac{1-e^{-(\gamma_1-\gamma_2)l}}{\gamma_1-\gamma_2} \right. = l.$

If the length l is electrically long, and if the intermediate circuit is short circuited a large number of times per elemental length dl, so that γ_3 becomes exeeedingly large

$$F = \frac{(Z_{13})^2}{4 Z_0 Z_3} \left[\frac{2l}{\gamma_3} \right] = \frac{Z_{12}}{2 Z_0} l \qquad (38)$$

for

$$Z_{12} = \frac{Z_{13} Z_{23}}{Z_3 \gamma_3} = \frac{Z_{13} Z_{23}}{Z}$$

where $Z = Z_3 \gamma_3$ is the distributed series surface impedance of the intermediate transmission line.

Equation (38) is the same as equation (27) although it has been derived in a different manner. It is interesting to note that in a cable which has intermediate elements the far end crosstalk is decreased by their presence as per equation (37). For three identical coaxials the decrease will be proportional to the length. In any such system however ther will also be direct far end crosstalk from one coaxial into the other which must be added to the indirect crosstalk as derived above.

An intermediate circuit might take the form of control pairs etc. described in Chapter VI. The presence of these circuits would tend to decrease the far end crosstalk if the coaxials are not in direct contact. If the coaxials are in direct contact the crosstalk will be largely due to direct crosstalk although a contribution will be made by the third circuit as per equation (37). The mutual impedances of the circuits would account for the magnitude differences.

Several conditions are represented by equations (37) and (38). In one case the coaxials are not in contact and crosstalk is via a third circuit. Such crosstalk is termed "indirect" crosstalk while that for the coaxials in contact is termed "direct" crosstalk. This latter definition is ambiguous since in the case of three circuits in one cable there will

also be direct coupling from the first to the second circuit plus the "indirect" action described above. The former will be less due to the relative magnitudes of the mutual impedances. In the limit of course, one reduces to the other, and direct crosstalk only is present. In the case of control and alarm pairs plus sheath construction two indirect paths are provided despite bonding of the coaxials. The total crosstalk under such conditions is due to the addition of all components. The crosstalk due to a fourth circuit may be derived by using the last method described above and is given by the following relation,

$$F_4 = -\frac{Z_{14}}{16 Z_0 Z_4 \gamma_4}\left[\frac{2l}{\gamma_4}\cdot\frac{\gamma_4^2}{\gamma_4^2-\gamma^2} - \left(\frac{2(\gamma_4^2+\gamma^2)}{(\gamma_4^2-\gamma^2)^2} - \frac{e^{-(\gamma_4-\gamma)l}}{(\gamma_4-\gamma)^2} - \frac{e^{-(\gamma_4+\gamma)l}}{(\gamma_4+\gamma)^2}\right]\right. \qquad (39)$$

An interesting situation arises for the coaxials physically bonded together and in turn physically bonded to the sheath. For such a condition the mutual impedances Z_{14} and Z_{12} may be replaced by the relations,

$$Z_{14} = \frac{Z_{\alpha\beta}^2}{Z_4 \gamma_4} \qquad Z_{12} = \frac{Z_{\alpha\beta}^2}{Z_3 \gamma_3} \qquad (40)$$

where $Z_{\alpha\beta}$ is the mutual impedance between the inner and outer surfaces of the coaxial per unit length; and $Z_3\gamma_3$ and $Z_4\gamma_4$ is the distributed series impedance per unit length of the <u>surfaces</u> of the bonded coaxials in the first instance, and the sheath and coaxials in the second instance. The resultant far end crosstalk becomes,

$$F_l = \frac{Z_{\alpha\beta}^2}{2Z}\left[\frac{l}{Z_3\gamma_3} - \frac{l}{4 Z_4 \gamma_4}\right] \qquad (41)$$

If $Z_3 \gamma_3 = 4 Z_4 \gamma_4$ then the total far end crosstalk will be zero. This condition is approached by winding the coaxials in steel tape.

For electrically long lengths of cable where a tertiary circuit and an insulated sheath are present there are three components of far end crosstalk which will be,

$$F_{12}(direct) = \frac{Z_{\alpha\beta}^2}{2 Z_0 Z_c \gamma_c} l \qquad (42a)$$

$$F_3(indirect) = \frac{Z_{\alpha\beta}^2}{2 Z_0 Z_3 \gamma_3} l \qquad (42b)$$

$$F_4(indirect) = \frac{2 Z_{\alpha\beta}^2}{16 Z_0 Z_4 \gamma_4}\left[\frac{\gamma_4 l(\gamma_4^2 - \gamma^2) - (\gamma_4^2 + \gamma^2)}{\gamma_4^2 - \gamma^2}\right] \qquad (42c)$$

The sum then of all three will be

$$F_{12} + F_3 + F_4 = \frac{Z_{\alpha\beta}^2}{2 Z_0}\left[\frac{l}{Z_c \gamma_c} + \frac{l}{Z_3 \gamma_3} - \frac{\gamma_4 l(\gamma_4^2 - \gamma^2)}{4 Z_4 \gamma_4 (\gamma_4^2 - \gamma^2)} + \frac{\gamma_4}{4 Z_4 \gamma_4}\left(\frac{\gamma_4^2 + \gamma^2}{\gamma_4^2 - \gamma^2}\right)\right] \qquad (43)$$

if $\gamma_4 >> \gamma_c$ then (43) becomes

$$F_{12} + F_3 + F_4 = \frac{Z_{\alpha\beta}^2}{2 Z_0}\left[l\left\{\frac{1}{Z_c \gamma_c} + \frac{1}{Z_3 \gamma_3} - \frac{\gamma_4}{4 Z_4 \gamma_4}\right\} + 1\right] \qquad (44)$$

From equation (44) it is evident that the far end crosstalk builds up directly with the length of the cable and for this reason it is more serious a problem than near end crosstalk which tends to become a constant value for long lengths.* The ratio of far end to near end

crosstalk becomes

$$\frac{F}{N} = 2\gamma\left[1 + \frac{\delta(1-k)}{(1-k\delta)}\right. \qquad (45)$$

where $k = \frac{2\gamma}{\gamma_4}$

and $\delta = \frac{1}{Z_c\gamma_c} + \frac{1}{Z_3\gamma_3} - \frac{\gamma_4}{4Z_4\gamma_4}$

3. Addition By Sections.

The above equations apply for a continuous length of cable with two coaxial conductors. It was shown however that the presence of additional coaxials reduces the crosstalk present in all due to a disturbance in any one circuit. Therefore it may be safely assumed that two-coaxial cable will have greater crosstalk than four, six, or eight-coaxial cable.

The most important question for which an answer is necessary is that of crosstalk at the end of a long length of many repeatered sections. Where transmission on either coaxial is in opposite directions the near end crosstalk correspons to the output of one repeater feeding into the input of the other. From repeater to repeater however, the near end crosstalk from any one section has a random phase distribution since at the repeater the principle component of crosstalk is from the preceding cable section over which the near end crosstalk is yet to be transmitted. The same is true at each succeeding repeater and due to variations in

repeater spacings the total crosstalk at the terminal due to any one section has random phase with that due to any other section. As a result the near end crosstalk builds up in a root-mean-square fashion and the total crosstalk is proportional to the square root of the number of sections between terminals.*

Where two coaxials transmit in the same direction the output of one feeds into the output of the other. The contribution of near end crosstalk to the signal is therefore minor and the far end crosstalk becomes more serious. In such a case the phase of the far end crosstalk will not be random since the amplifiers at each repeater have almost identical phase characteristics. The far end crosstalk therefore will not only tend to build up with the length of cable sections but also as the first power of the number of sections. With phase differences of 5°-10° at each repeater, and a large number of sections, the phase distribution may approach a random disposition. In coast-to-coast circuits this fact becomes a saving grace.

As mentioned previously, crosstalk limitations have largely been responsible for the lower frequency limit of 60 KC set for the L1 system. It is expected that in a coast-to-coast network the contribution of crosstalk will not be too great. The total noise and unintelligible crosstalk due to cables and modulation in repaters is not expected to exceed the normal noise level at a receiving terminal by more than 29 db.

* Schelkunoll, S. A. and Odarenko, T. M. - (9)

BIBLIOGRAPHY

1. Bell System Practices.

   (a) E44.054. A1 and A2 12-Channel Bank with Voice Frequency Terminating Arrangements
   (b) E44.082. Terminal Group and Supergroup Equipment
   (c) E44.083. Carrier and Pilot Supply
   (d) E44.580. General Description of Repeaters and Associated Line Arrangements
   (e) E44.581. Repeaters
   (f) E44.582. Regulators and Equalizers.
   (g) E44.583. Pilot Indicators and Alarms
   (h) E44.584. Line Switching Arrangements
   (i) E44.585. Repeater Power Supply Arrangements
   (j) A801.309. Regulated Tube Rectifier-Inverter, Phase Shift Control J86425A and Associated Power Control Panels J86425B and C.

2. Bennett, W. R. - Croos Modulation Requirements on Multichannel Amplifiers Below Overload.
   B.S.T.J. 19.587-605

3. Black, H. S.-Stablized Feedback Amplifiers
   Electrical Engineering, A I E E, 53.114-120

4. Bode, H. W.-Network analysis and Feedback Amplifier Design
   D. Van Nostrand 1945

5. Bode, H. W.-Relations Between Attenuation and Phase in Feedback Amplifier Design.
   B.S.T.J. 19:421-454

6. Booth, R. P.-and Odareko, T. M.-Crosstalk Between Coaxial Conductors in Cable-
   B.S.T.J. 19.358-384

7. Elmendorf, C. H.-3000 KC Coaxial System 3000-1 Line Amplifier
   Memo. No. 40-3500-34
   Bell Telephone Laboratories

8. Holbrook, B. D. and Dixon, J. T.-Load Rating Theory for Multi-channel Amplifiers
   B.S.T.J. 18:624-644

9. Schelkunoff, S. A. and Odarenko, T. M. - Crosstalk Between Coaxial Transmission Lines-B.S.T.J. 16:144-164

APPENDIX

Characteristics of .375" Polyethylene-Insulated

Coaxial Cable with .010" Wall Thickness

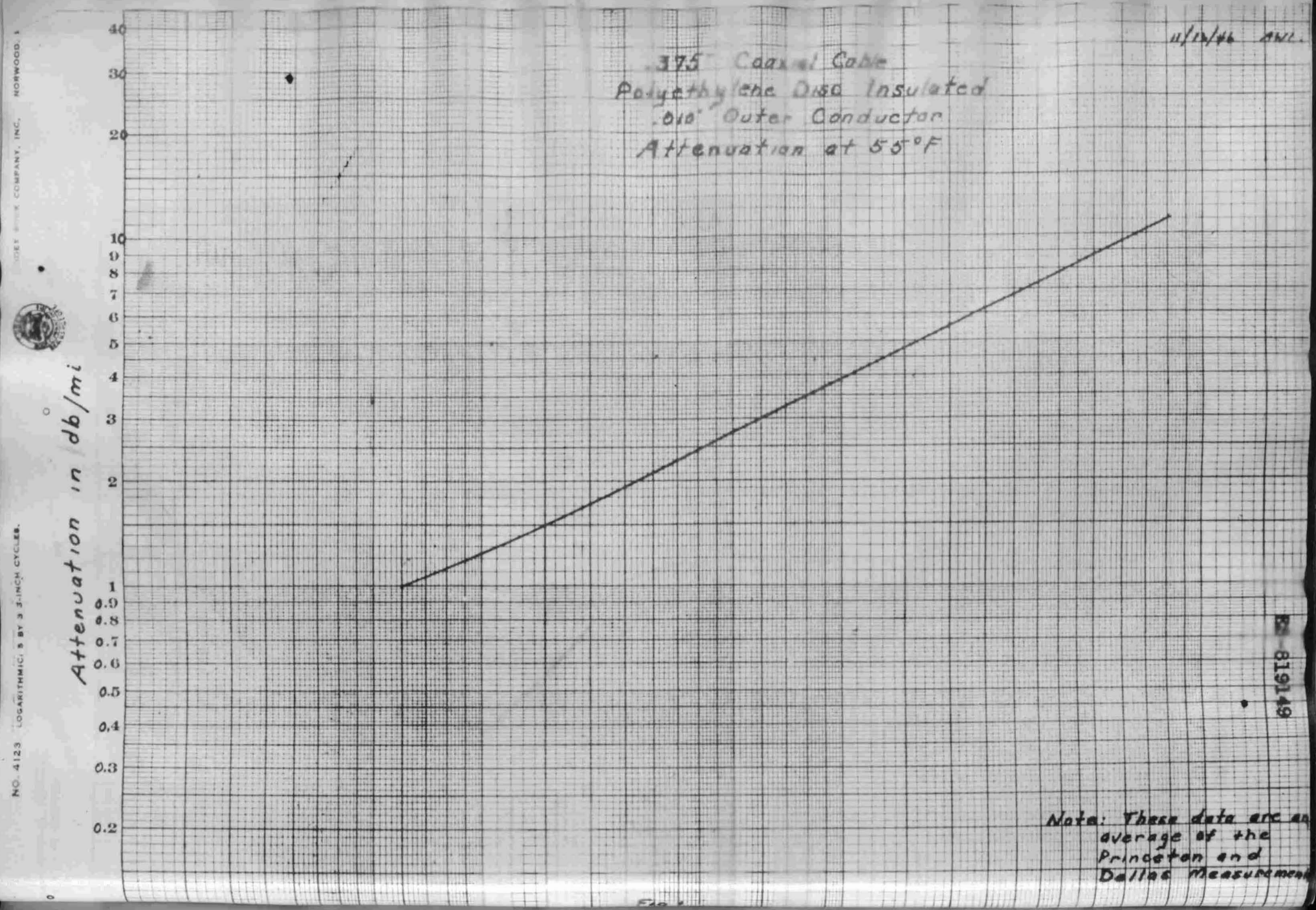
.375 Coaxial Cable
Polyethylene Disc Insulated
.010" Outer Conductor
Attenuation at 55°F
11/12/46 AWL
Attenuation in db/mi
40
30
20
10
9
8
7
6
5
4
3
2
1
0.9
0.8
0.7
0.6
0.5
0.4
0.3
0.2
Note: These data are an average of the Princeton and Dallas measurements
E 819149
NO. 4123 LOGARITHMIC, 5 BY 3-INCH CYCLES.
KEUFFEL & ESSER COMPANY, INC. NORWOOD, N.

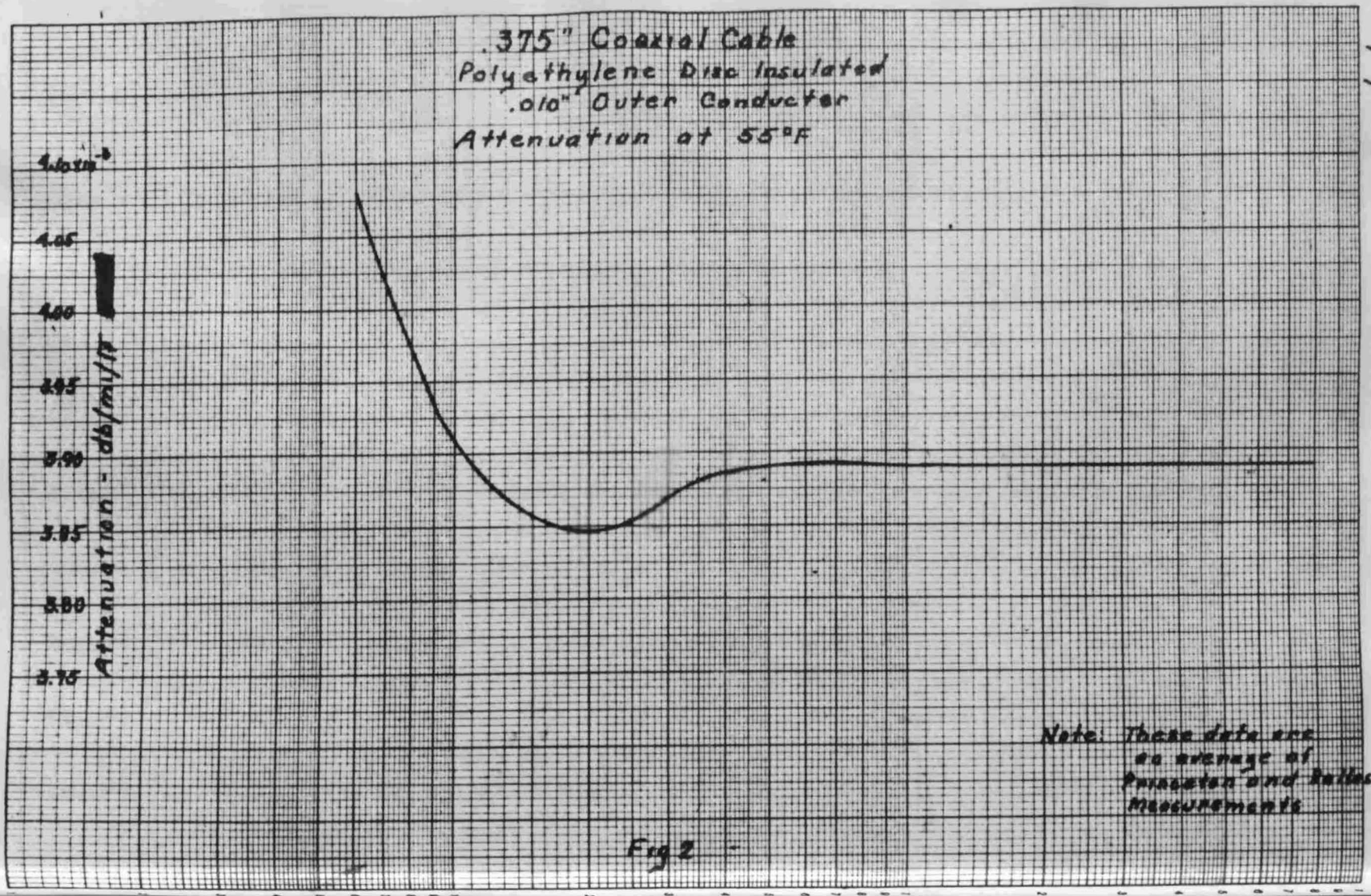

Fig 2

ISSUE	DR.	TITLE	BELL TELEPHONE LABORATORIES, INC.
11/12/44	ENG. AWL		ES-819150

E-1938 (9-42)

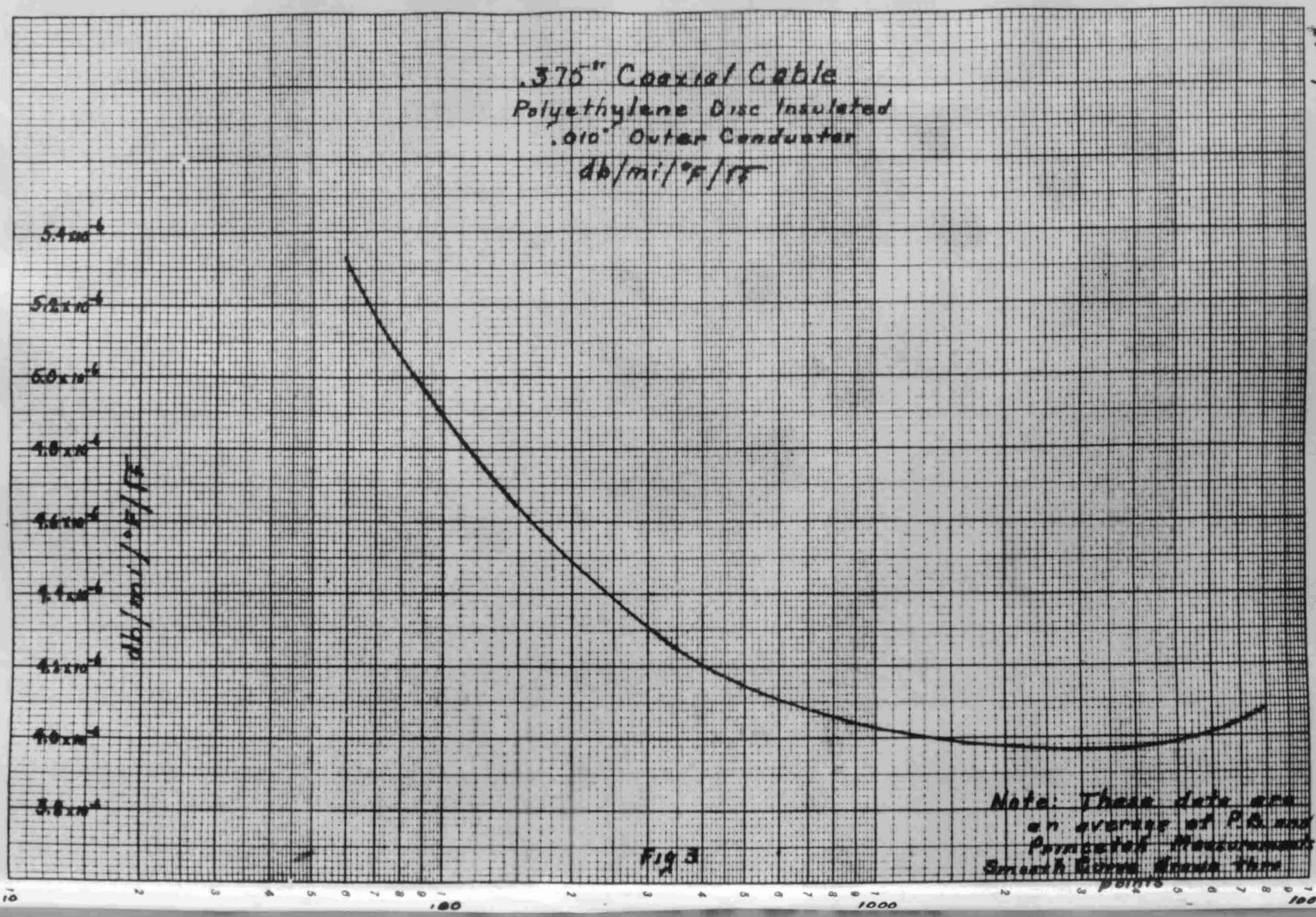

Fig 3

ISSUE	DR.	TITLE	BELL TELEPHONE LABORATORIES, INC.
9/12/46	ENG. DWR		ES-819151

E-1938 (9-42)

PRINTED IN U. S. A.
"BARKNOTE" NO. 81818 LB KALCO, N.Y.
TRADE MARK

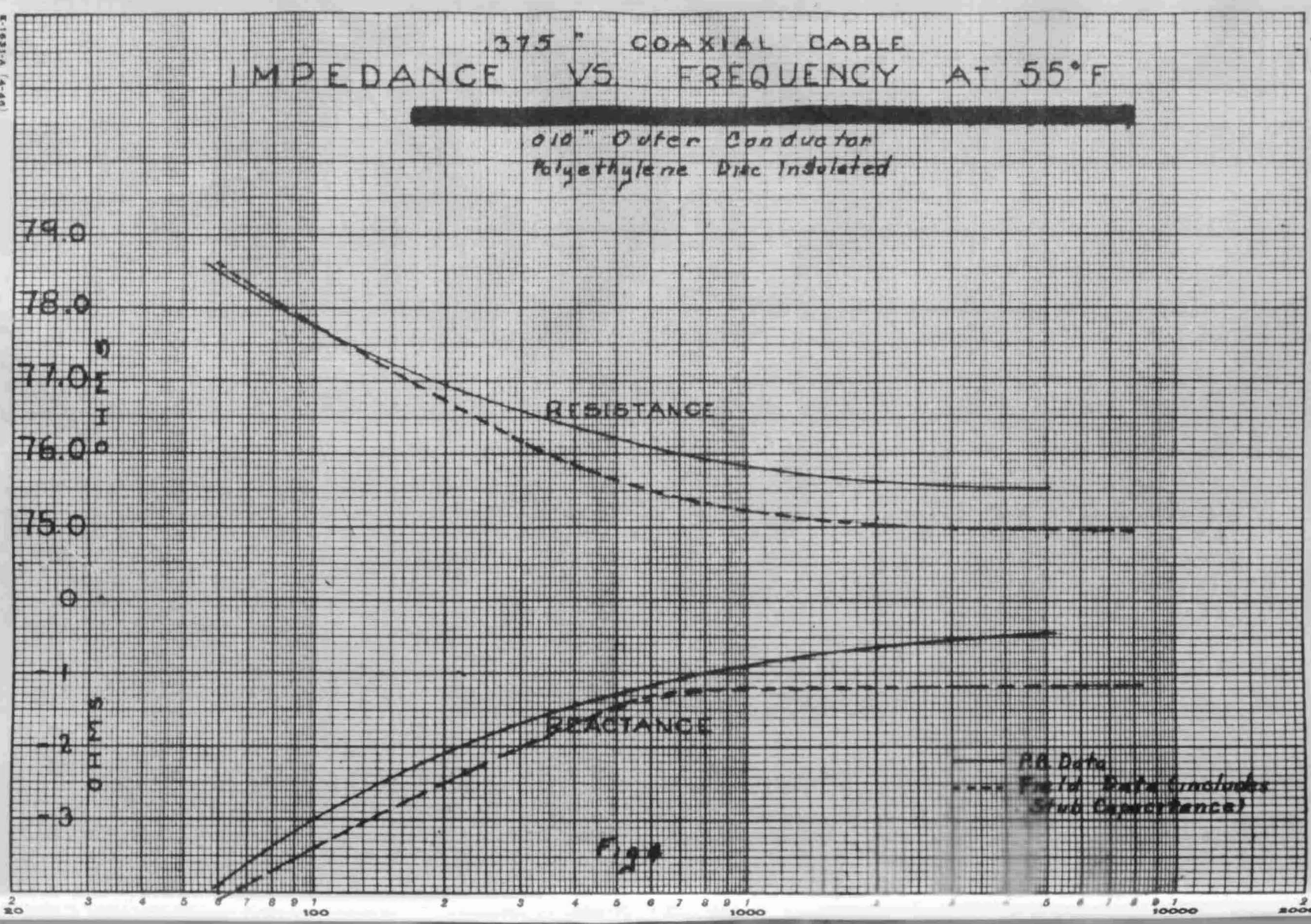

Fig 4

ISSUE	11/12/46
DR.	A.W.L.
ENG.	
TITLE	
BELL TELEPHONE LABORATORIES, INC.	
NO. OF SHEETS PER SET	SEE SHEET 1
SHEET	
BA-	ES-819152

E-1631-A (4-46)

"BARKNOTE" NO. 174 KARCO N.Y. TRADE MARK

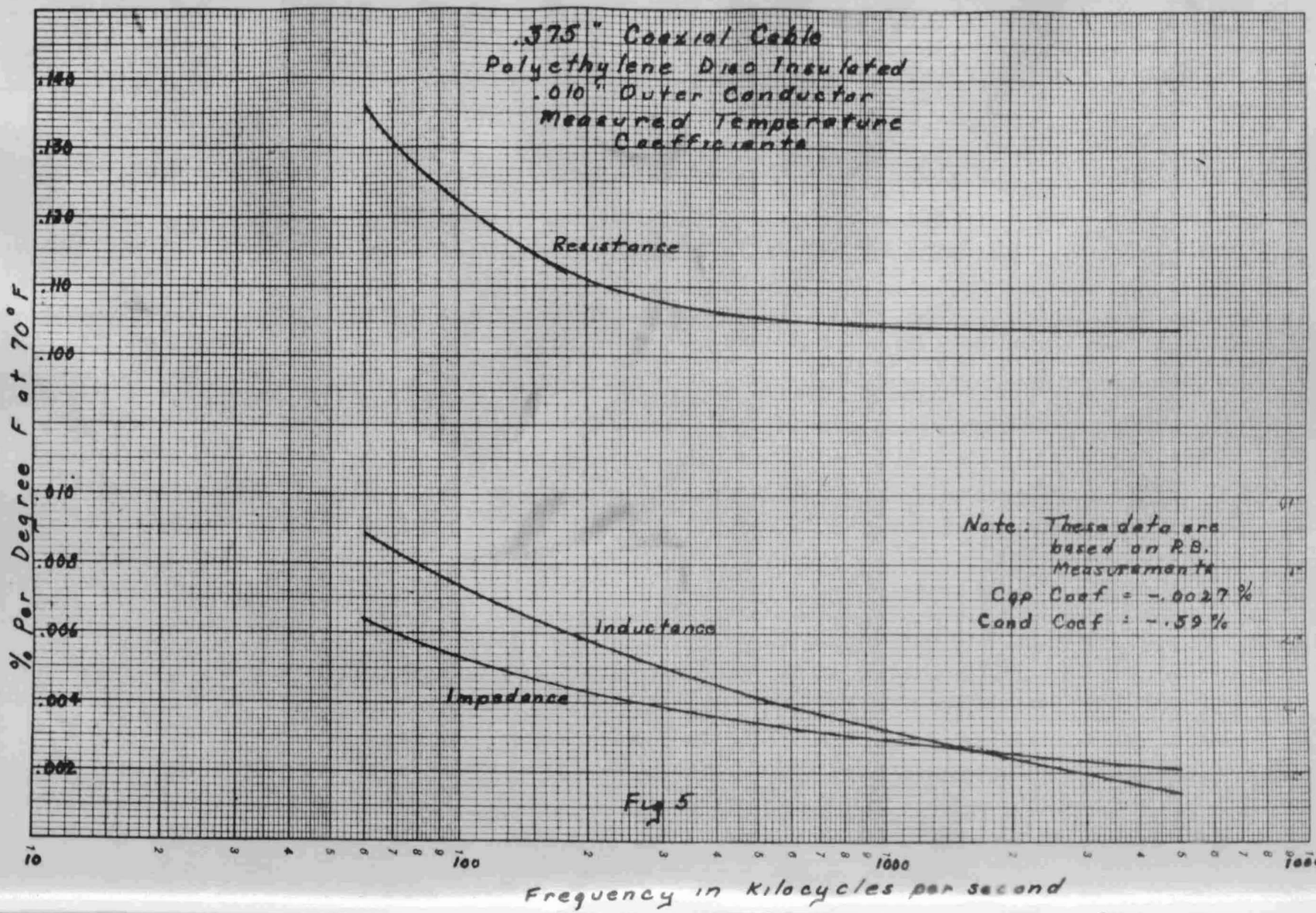

Fig 5

ISSUE	DR.	TITLE	BELL TELEPHONE LABORATORIES, INC
11/12/46	ENG. A.W.L		ES-819153

E-1938 (9-42)

PRINTED IN U. S. A.
"BANKNOTE" NO-N1025LB KALCO., N.Y.
TRADE MARK

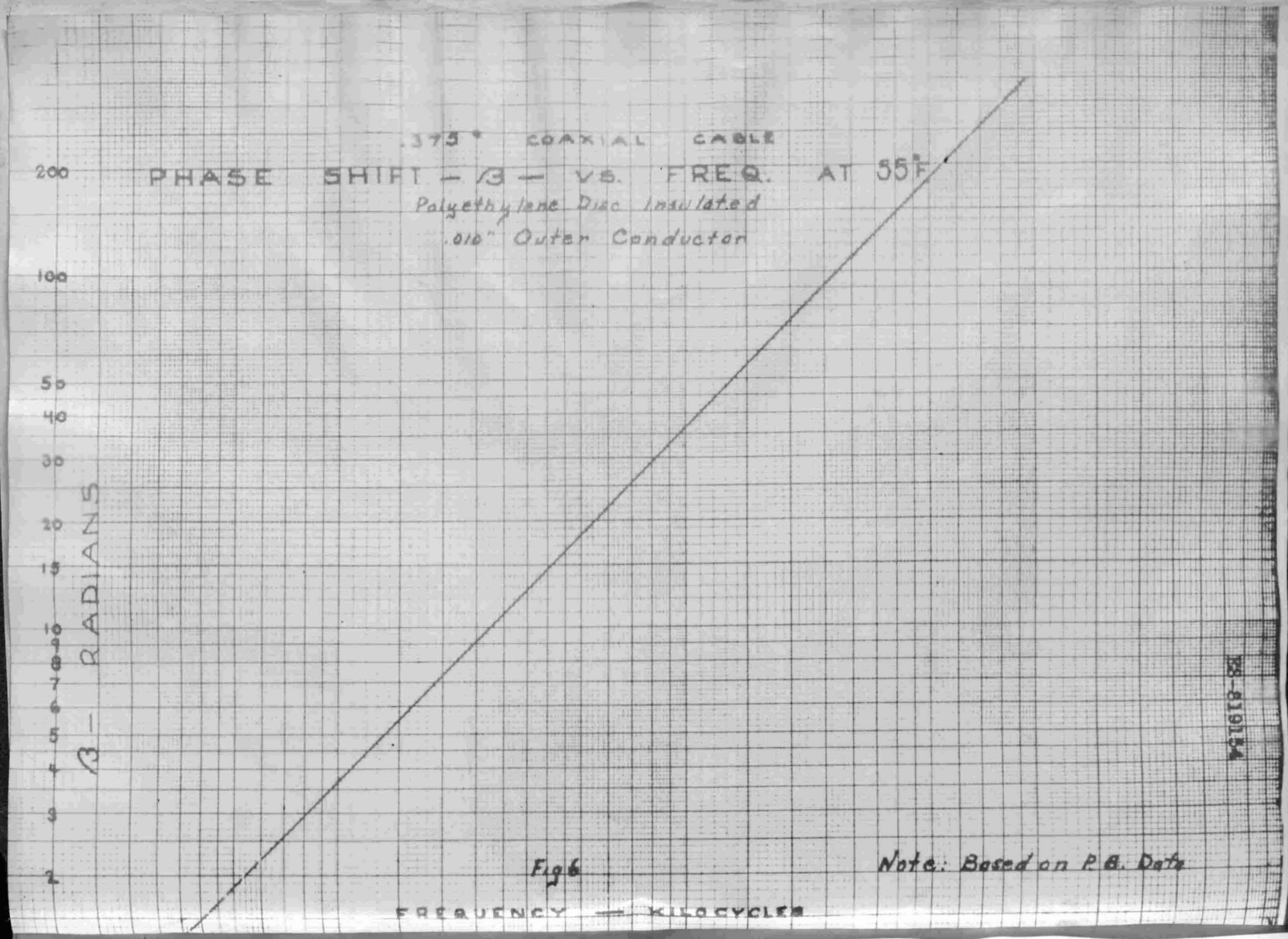
.375" COAXIAL CABLE
PHASE SHIFT — β — VS. FREQ. AT 55°F
Polyethylene Disc Insulated
.010" Outer Conductor
β — RADIANS
200
100
50
40
30
20
15
10
9
8
7
6
5
4
3
2
FREQUENCY — KILOCYCLES
Note: Based on P.B. Data

Fig 6