Calhoun: The NPS Institutional Archive

DSpace Repository

Acquisition Research Program | All Technical Reports Collection

2009-12-28

Cost-benefit Analysis (CBA) of the Total Integrated Engine Revitalization (TIGER) Condition-based Overhaul (CBO) Process for the M1 Abrams AGT 1500 Turbine Engine at the Army Depot Level of Maintenance

Fitzgerald, Michael; Davis, Corey; Lee, Woo Youl

https://hdl.handle.net/10945/33815

This publication is a work of the U.S. Government as defined in Title 17, United States Code, Section 101. Copyright protection is not available for this work in the United States.

Downloaded from NPS Archive: Calhoun

Calhoun is the Naval Postgraduate School's public access digital repository for research materials and institutional publications created by the NPS community. Calhoun is named for Professor of Mathematics Guy K. Calhoun, NPS's first appointed -- and published -- scholarly author.

Dudley Knox Library / Naval Postgraduate School
411 Dyer Road / 1 University Circle
Monterey, California USA 93943

http://www.nps.edu/library

NPS-LM-09-134

ACQUISITION RESEARCH SPONSORED REPORT SERIES

Cost-benefit Analysis (CBA) of the Total Integrated Engine Revitalization (TIGER) Condition-based Overhaul (CBO) Process for the M1 Abrams AGT 1500 Turbine Engine at the Army Depot Level of Maintenance

28 December 2009

by

Maj. Michael P. Fitzgerald, US Army,

Capt. Corey J. Davis, US Army, and

Capt. Woo Youl Lee, Republic of Korea Air Force

Advisors: Michael Boudreau, Senior Lecturer, and
Dr. Raymond Franck, Senior Lecturer

Graduate School of Business & Public Policy

Naval Postgraduate School

Approved for public release, distribution is unlimited.

Prepared for: Naval Postgraduate School, Monterey, California 93943

ACQUISITION RESEARCH PROGRAM
GRADUATE SCHOOL OF BUSINESS & PUBLIC POLICY
NAVAL POSTGRADUATE SCHOOL

The research presented in this report was supported by the Acquisition Chair of the Graduate School of Business & Public Policy at the Naval Postgraduate School.

To request Defense Acquisition Research or to become a research sponsor, please contact:

NPS Acquisition Research Program
Attn: James B. Greene, RADM, USN, (Ret)
Acquisition Chair
Graduate School of Business and Public Policy
Naval Postgraduate School
555 Dyer Road, Room 332
Monterey, CA 93943-5103
Tel: (831) 656-2092
Fax: (831) 656-2253
e-mail: jbgreene@nps.edu

Copies of the Acquisition Sponsored Research Reports may be printed from our website www.acquisitionresearch.org

ACQUISITION RESEARCH PROGRAM
GRADUATE SCHOOL OF BUSINESS & PUBLIC POLICY
NAVAL POSTGRADUATE SCHOOL

Abstract

The M1 Abrams is one of the finest land combat vehicles in history and has been the backbone of our nation's ground combat strategy since its introduction in the 1980s. Initially intended to be in service until 2027, the Department of Defense (DoD) has extended the M1's role to the year 2050—increasing the operations and support (O&S) cost burden associated with this system. The M1's engine, the Honeywell AGT1500, accounts for over 60% of that system's O&S cost. As a result, ways to reduce the cost of maintaining the engine (as well as improve its durability) have been the focus of TACOM and PM Abrams.

Honeywell's Total Integrated Engine Revitalization (TIGER) program attacks this problem from several directions. Condition-based Overhaul (CBO) is one strategy designed to reduce the cost of overhauling the engine at Anniston Army Depot (ANAD). Building on existing durability and process improvements, Honeywell and ANAD have formulated a process that utilizes engine usage data and operating hours to direct a tailored overhaul of each engine. This cost-benefit analysis (CBA) focuses on quantifying the costs and benefits of this change.

Through a combination of data collected from various sources, our own assumptions about the future of CBO, and input to a Monte Carlo simulation, we conclude that CBO at ANAD can potentially reduce the cost of overhauling the AGT1500 an average of 31% when compared to the current overhaul strategy. This alternative produces a savings-to-investment ratio (SIR) of 12.5 based on the higher-hour alternative to the year 2050. The researchers also conducted sensitivity analyses of alternatives and indicated our preferred alternative (CBO with a higher-hour complete overhaul breakpoint) is relatively insensitive to changes in assumptions.

Keywords: Total Integrated Engine Revitalization (TIGER), Cost-benefit analysis (CBA), M1 Abrams, AGT1500 turbine engine, Condition-based maintenance (CBM), Condition-based overhaul (CBO), Depot, Anniston Army Depot (ANAD)

Acknowledgments

The authors would like to thank the many people that helped to make this research possible. Without the support of these individuals, this project would not have been a success. We thank our advisors, Professors Michael Boudreau (Colonel, USA Ret.) and Raymond “Chip” Franck (BG, USAF Ret.), for their direction and encouragement throughout the process and for their help in keeping us focused on what really matters. To those at PM Abrams and TACOM, specifically, Jerry Biolchini, Brad Hoffman, Jonathan Taylor and Tim Milanov, who provided us with this topic and the support and travel to gain valuable information we needed to conduct this research. We also thank those at Honeywell and Anniston Army Depot (ANAD) for providing the hard data and answering our countless questions to build our understanding of the Condition-based Overhaul (CBO) process and how it will be implemented. Specifically, we thank David Marsh, Brad Quintus and Elizabeth Field of Honeywell for the time and effort they put into analyzing the data to help us arrive at our conclusions and for laying the foundation for CBO. Additionally, we thank Chuck Gunnels and Warren Turner from ANAD Turbine Value Stream for the time they devoted to this project as well. We also thank Jeff Banks from Penn State ARL for sharing his vast knowledge of Condition-based Maintenance (CBM) with us and helping us to understand the principles of CBM early on, which was foundational to this research. We must also thank our families for their patience and understanding through this whole journey. Without their support this would have been impossible. Finally, we would like to thank each other for the dedication and devotion to accomplish such a large task. We each used our talents and gifts to make this project a success and without each other, it could not have been a success.

THIS PAGE INTENTIONALLY LEFT BLANK

About the Authors

Major Michael Patrick Fitzgerald, United States Army, is currently a student in the Master of Business Administration program (with an emphasis in Program Management) at the Naval Postgraduate School, Monterey, CA. Major Fitzgerald completed his undergraduate studies at Missouri State University in Springfield, MO. Prior to his current assignment, Major Fitzgerald served as an operational test officer at the US Army Operational Test Command, Fort Hood, TX. His next assignment is to PEO Missile and Space at Redstone Arsenal, AL.

Captain Corey J Davis, United States Army, is currently a student in the Master of Business Administration program (with an emphasis in Financial Management) at the Naval Postgraduate School, Monterey, CA. Captain Davis completed his undergraduate studies at Southern Utah University in Cedar City, UT, and a Master's in Management and Leadership from Webster University. Prior to his current assignment, Captain Davis served as a Detachment Commander in the 125th Financial Management Battalion. His next assignment is to the 612th Contingency Contract Team in Ft. Hood, TX.

Captain Woo Youl Lee, Republic of Korea Air Force, is currently a student in the Master of Business Administration program at the Naval Postgraduate School, Monterey, CA. Captain Lee received his Bachelor of Arts in Management degree from Republic of Korea Air Force Academy in Cheong Ju, South Korea. Prior to his current assignment, Captain Lee served as a Fighter Pilot (F-16) at the Seosan Air Force Base, Korea. His next assignment is to Air Force Fire Power Coordinator of ROK-US Combined Force Command, Seoul.

THIS PAGE INTENTIONALLY LEFT BLANK

NPS-LM-09-134

ACQUISITION RESEARCH SPONSORED REPORT SERIES

Cost-benefit Analysis (CBA) of the Total Integrated Engine Revitalization (TIGER) Condition-based Overhaul (CBO) Process for the M1 Abrams AGT 1500 Turbine Engine at the Army Depot Level of Maintenance

28 December 2009

by

Maj. Michael P. Fitzgerald, US Army,

Capt. Corey J. Davis, US Army, and

Capt. Woo Youl Lee, Republic of Korea Air Force

Advisors: Michael Boudreau, Senior Lecturer, and

Dr. Raymond Franck, Senior Lecturer

Graduate School of Business & Public Policy

Naval Postgraduate School

Disclaimer: The views represented in this report are those of the author and do not reflect the official policy position of the Navy, the Department of Defense, or the Federal Government.

THIS PAGE INTENTIONALLY LEFT BLANK

Table of Contents

I. Introduction 1

A. General 1

B. Objectives of Research 3

C. Research Questions 4

D. Scope and Limitations of Research 4

E. Methodology 5

F. Organization of Research 6

II. Background 9

A. Introduction 9

B. History and Development of the AGT1500 Engine 9

C. AGT1500 GAS Turbine Engine Developmental History 14

D. Honeywell Tiger Contract Requirements In Relation To Condition-Based Overhaul (CBO) 28

E. Previous Overhaul Strategies 31

F. Condition-Based Maintenance In Relation to CBO 36

G. Chapter Conclusion 39

III. Condition-Based Overhaul 41

A. Introduction 41

B. Brief History of Anniston Army Depot's Turbine Value Stream 41

C. Electronic Manufacturing Operations and Tooling System 43

D. Standard Overhaul Process 44

E. Condition-Based Overhaul Process 50

F. Comparison of Processes 58

G. Chapter Conclusion 62

IV. Data Presentation 63

A. Introduction 63
B. Limitations 64
C. Assumptions 64
D. Costs 65
E. Benefits 71
F. Chapter Conclusion 81
V. Data Analysis 83
A. Introduction 83
B. Methodology 83
C. Results 96
D. Sensitivity Analysis 98
E. Chapter Conclusion 101
VI. Conclusions and Recommendations 103
A. Conclusions 103
B. Recommendations 104
Appendix A. EMU Data Summary 107
Appendix B. Honeywell Draft WPG 109
Appendix C. Mean Time Between Depot Return (MTBDR) 111
Appendix D. Determination of Total Number of Tiger Engines 113
Appendix E. Number of Engines Overhauled At ANAD Annually 115
Appendix F. Engine Cost 117
Appendix G. CBO Funding Appropriations 119
Appendix H. Monte Carlo Simulation 121
Appendix I. Discount Factors 123
List of References 125

I. Introduction

A. General

The M1 Abrams Main Battle Tank is one of the finest land combat vehicles in the history of land warfare. Conceived during the Cold War to face the armored threats of the Soviet Union on the plains of the German countryside, the M1 Abrams has proven itself an effective weapon system in many environments. With its impressive armor, armaments, and other technological capabilities, the M1 has distinguished itself among its contemporaries.

Many Department of Defense (DoD) weapons system programs are being extended beyond their anticipated lifespans. The DoD initially intended the M1 to be in service until 2027, with the expectation that new technologies would emerge and replace the Abrams ("Sustaining," 2009). With the cancellation of the Future Combat System (FCS) Manned Ground Vehicle portion of the program, it appears that this "legacy" system will be in service for many years to come (Osborn, 2009). As it stands today, the DoD expects the M1 Abrams to be in service anywhere in the range from year 2030 to 2050 (Fan, Peltz, & Colabella, 2005).

This is not to say that improvements will not be made to the Abrams tank. In fact, the Program Manager for Abrams (PM Abrams is referred to as "the PM" from this point forward) is currently working with the Tank-automotive and Armaments Command (TACOM) to develop the M1E3, the next generation of the M1. This variant will serve to extend the M1's service life for years to come; however, legacy systems will still remain in service. Typically, operations and support costs represent the largest part of a system's lifecycle budget (Rendon & Snider, 2008). As systems, including the M1, are extended beyond their intended service life, the costs associated with operating and maintaining these systems can climb significantly, making it increasingly important to find ways to effectively maintain these systems and utilize technological advancements in both the defense and civilian sectors to minimize costs.

Currently, Anniston Army Depot (ANAD) near Anniston, Alabama, is the only depot authorized to overhaul AGT1500 engines for the active US Army and US Marine Corps.[1] ANAD employs a one-piece flow assembly line method for overhauling the engine in which most parts are replaced regardless of their remaining useful life. Honeywell International's most recent upgrade to the AGT1500, called Total Integrated Engine Revitalization (TIGER), uses increased durability parts and existing sensors (such as the T1 and T7 sensors) embedded in the engine to record engine performance and the amount of time the engine has been in use (using an engine hour meter). These data are critical elements in driving the Condition-based Overhaul (CBO) process, which this study will consider. Under CBO, analysts correlate usage data gained from the engine memory unit (EMU) and operating hours from the engine's hour meter with the *CBO Work Planning Guide (WPG)* to direct a tailored scope of overhaul based on the accumulated life of components in the engine.

This method of overhaul has the potential to reduce operations and support costs through a reduction of replacement parts, labor hours and overhaul time. Accordingly, the process at ANAD will likely be altered to accommodate the customized scope of work that each engine will receive based on data gained from sensors. This change will no doubt entail growing pains as ANAD faces the challenge of adjusting its currently effective process to accommodate the benefits that CBO can provide. Just as Henry Ford's production line challenged the artisan method of building automobiles in the early 1900s, advancements in and application of condition-based maintenance (CBM) technology are now challenging how maintenance operations are performed (PBS, 1998). The United States Army is in the process of making a concerted effort toward CBM technologies and processes as outlined by the *Condition Based Maintenance Plus (CBM+) Roadmap*. The CBO

[1] The Kansas Army National Guard also conducts overhauls of the Service Life Extension (SLE) engine; however, only for the Army National Guard.

process is consistent with CBM+ in that it is intended “to integrate ‘best of breed’ maintenance strategies and concepts with innovative technologies to create a new maintenance environment” (Headquarters, 2007, p. iii). Transition to CBO should not be perceived as change for the sake of change but instead as an attempt to allow technology to improve this paradigm for maintenance.

B. Objectives of Research

The purpose of this project is to provide the PM with a Cost-benefit Analysis (CBA) in the form of a savings-to-investment ratio (SIR) for overhauling the M1’s AGT1500 gas turbine engine at the ANAD, using the CBO approach. Program managers and decision-makers at various levels of command and responsibility rely on CBAs and business case analyses to guide them in selecting the proper course of action when investing funds and considering options. Through examination of anticipated and calculated costs and benefits, leaders can objectively evaluate their decisions. This CBA is the first attempt at quantifying the costs and benefits of the CBO process. To do so, the authors will accomplish the following:

1. Identify the agreed (ANAD, Honeywell, and TACOM) method for the CBO process.

2. Identify additional investment costs to implement the CBO process at ANAD.

3. Determine the average unit cost (AUC) of alternatives for CBO of TIGER engines out to fiscal year (FY) 2050.

Additionally, we anticipate this research to be the first of many attempts to quantify the benefits of the CBO process as well as the impacts that CBM technology can bring to it. Like all research, this study is performed with the information available at the time. As the CBO process is initiated and refined at ANAD, more data from both the depot and the field will provide valuable insight to help calculate the costs and benefits of this program.

C. Research Questions

1. Primary Research Question

- What is the savings-to-investment ratio (SIR) of implementing and maintaining the CBO process through the lifecycle of the TIGER AGT1500 engine to FY 2050?

2. Secondary Research Questions

- What additional facilities, hardware, software, equipment and personnel will be required to implement an effective CBO process?
- How much lifecycle cost savings can the CBO process achieve, compared to the TIGER-sustainment status-quo given Work Planning Guide (WPG) time bands and different points at which a TIGER-sustainment overhaul is performed?

D. Scope and Limitations of Research

Although there are many aspects of the TIGER contract, AGT1500, and overhaul process that could be researched, this study will focus solely on the CBO process, limiting our scope to only those aspects directly pertaining to developing this CBA. We will establish a baseline calculation for overhauling the TIGER AGT1500, utilizing standard ANAD overhaul procedures, associated labor costs, and the TIGER-sustainment bill of material (BOM). This baseline will be used as a basis of comparison for various points at which it is no longer recommended to use a tailored overhaul approach and at which a TIGER-sustainment overhaul is required.

There are, however, a number of limitations to this project. Since the CBO process is still awaiting implementation at the ANAD Turbine Value Stream (TVS) facility, there is little data currently available to develop our CBA. As it stands, ANAD, Honeywell, and TACOM are still determining the intricacies of the CBO process. This ambiguity requires a number of assumptions on our part to estimate likely investment costs as well as parts and labor costs associated with the CBO process. Additionally, the TIGER engine is still relatively new. These engines have only begun to return to the depot, and the volume of Field Service Reports (FSR) is

limited. As a result, trends normally observed over longer periods of time and with higher levels of system density are not available for analysis. These limitations do not present insurmountable hurdles for this research but will make our conclusions accordingly tentative in nature.

E. Methodology

This research applies cost-benefit analysis techniques to the proposed CBO process of the TIGER AGT1500 engine at the ANAD TVS. In order to gather the information regarding the expected process and requirements for CBO, it was necessary to gather information and estimates from subject-matter experts (SME) at ANAD, Honeywell and TACOM. Additionally, various existing reports for the CBO process—including the CBO Statement of Work (SOW), Honeywell Fact-based Overhaul (FBO) process, and discussions regarding agreements toward the implementation of the CBO process—provided useful information. We also obtained SME estimates of investment requirements to conduct the CBO process of TIGER engines. These data form the investment portion of the SIR.

The baseline for comparison was then determined utilizing the TIGER-sustainment BOM with standard ANAD overhaul processes for labor and overhead. From this information, we calculated the average unit cost (AUC) of overhaul based on the goal of 1,400 hours mean time between depot return (MTBDR).

To arrive at the AUC, we developed a Monte Carlo simulation model by utilizing the probability of various events such as operating hours at return, WPG-levels, and possible failure events. These elements, in conjunction with various cost factors and the effect of subsequent overhaul sequences, made this type of simulation most beneficial to use. Because engines are returned to the depot due to failures, we considered not only the costs of repairing those failures, but also the costs of the level of work required by the WPG. Honeywell provided the distribution of engines and failures occurring in each time band based on analogy to their commercial fleet of aviation engines and auxiliary power units. They were also

based on available TIGER and other AGT1500 data from the Honeywell Fact-based Maintenance (FBM) database and ANAD Turbine Repair and Analysis Program (TRAP) reports. The AUC was then applied to the lifecycle of the entire fleet of TIGER engines to FY 2050. The SIR for each higher-hour (Honeywell proposed) and lower-hour (ANAD and TACOM proposed) alternative was calculated using the AUC and the recurring and non-recurring investment costs of implementing CBO. We also conducted sensitivity analysis for each option to address uncertainty pertaining to various aspects of CBO.

F. Organization of Research

The authors have organized this document to facilitate the reader's understanding and comprehension of the research conducted through the following chapters:

- Chapter I, Introduction, presents the purpose of this research and the research questions, and the scope and limitations of our analysis.
- Chapter II, Background, identifies the genesis of the M1 and AGT1500 gas turbine engine and discusses the various modifications to the engine over its life. This chapter also addresses other cost-saving maintenance strategies as well as principles of CBM and how they apply to the AGT1500 and the CBO process.
- Chapter III, Condition-based Overhaul, provides a description of both the standard overhaul practices currently followed at ANAD TVS and the CBO process. Through examination, the reader will understand the differences between the two processes and how the CBO process utilizes engine and historical data to allow ANAD to conduct a more cost-efficient overhaul.
- Chapter IV, Data Presentation, presents a description of all data our research team considered in developing the CBA.
- Chapter V, Data Analysis, provides the reader the results of this study, including the calculation of average unit costs (AUC) and savings-to-investment ratios (SIR). The analysis will demonstrate the SIRs for the higher- and lower-hour decision-point alternatives to conduct complete TIGER-sustainment overhaul, demonstrating how WPG time bands and probable failures affect the average unit cost (AUC) of the

overhaul to the PM. This chapter will also discuss sensitivity analysis of the data.

- Chapter VI, Conclusions and Recommendations, presents our conclusion regarding the outcome of this study and makes recommendations about the direction of future research.

- Appendices provide the reader with additional information related to the research conducted.

THIS PAGE INTENTIONALLY LEFT BLANK

II. Background

A. Introduction

This chapter provides background about the TIGER AGT1500 gas turbine engine and the Condition-based Overhaul (CBO) process. A thorough discussion of the development of the AGT1500 in relation to the M1 tank will demonstrate how the AGT1500 was originally selected and how various improvements continue to be made to increase the overall life of the engine. A detailed description of the engine will assist the reader later when we discuss the components of the engine that will be affected by the CBO process. A brief synopsis of the TIGER contract will reveal the requirements for the CBO process and other issues regarding this program. This chapter will also discuss other methods that the US Army has used in attempts to reduce operations and support costs of the AGT1500. Finally, this chapter will conclude with an orientation about Condition-based Maintenance (CBM), its varieties, and how the TIGER AGT1500 and CBO process partially utilize CBM technology to drive the overhaul process.

B. History and Development of the AGT1500 Engine

The M1 Abrams main battle tank has remained the backbone of the United States Army's armored fighting force since its introduction in 1980 (GlobalSecurity.org, 2009). Originally intended to meet the threat posed by the Soviet Union, the M1 Abrams has proven capable in battle during Operation Desert Storm in 1991 and more recently in Operation Iraqi Freedom. As this system approaches 30 years of service, the Department of Defense recently cancelled the Manned Ground Vehicle portion of the Army's flagship modernization effort, Future Combat Systems (FCS) (Osborn, 2009). With no replacement immediately in sight, the M1 will likely remain the United States' only main battle tank (MBT) for decades to come. Thus, the desire to extend the service life of the AGT1500 is an important ownership cost initiative.

Figure 1. Aeolipile Designed By Hero
(From NASA, 2009)

The gas turbine engine was first envisioned in 150 AD by Hero with a simple steam power toy called the *aeolipile* (see Figure 1) (NASA, 2009). Through the centuries, other inventors such as Leonardo da Vinci attempted to harness the power of compressed air, but it was not until 1903 that Norwegian inventor Ægidius Elling developed a productive gas turbine engine (Norwegian Petroleum Directorate, 2006). The early 1900s saw the creation of a number of gas turbine systems; however, it was based on their knowledge gained from Elling's work that both German and British scientists Hans von Ohain and Sir Frank Whittle separately developed the first gas turbine engines used in aircraft for military application in 1939 and 1941, respectively (Palmeri, 2004). Although many are familiar with the application of gas turbine engines in military aviation during World War II and after, it was not until 1954 that an attempt to place a gas turbine engine in an armored fighting vehicle occurred. C.A. Parsons & Company designed and tested the Parsons Unit 2979 (PU2979) gas turbine engine for the British Conqueror tank (Ogorkiewicz, 2001). In 1961, the United States Army sponsored the competitive

development of a 600-horsepower, gas turbine engine by the Solar Aircraft and Ford Motor Companies (2001). Neither the design-winning Solar T-600 nor the Ford 705 were adopted for military use, because both failed to establish a discernable advantage over other diesel models (2001). In spite of this outcome, the Army continued to pursue the development of a feasible gas turbine to power its armored vehicles and, in 1965, awarded the Lycoming Division of the AVCO Corporation a contract to develop a turbine engine for the MBT70 program (see Figure 2) (Ogorkiewicz, 2001).

Figure 2. Main Battle Tank 70 (MBT70) (After Grobianischus, 2008)

AVCO Lycoming's development work began in 1965 and resulted in the AGT1500 Army Ground Turbine (AGT) engine (Zaloga & Sarson, 1993). After the US-German MBT70 co-development was cancelled due to cost and performance issues, the XM1 program was initiated. As a competitive acquisition, the XM1 program pitted designs from General Motors and Chrysler Defense Incorporated (now General Dynamics Land Systems [GDLS]) against one another. Each contractor's proposal included a different engine, with GM choosing the Teledyne Continental AVCR-1360-2 1500-horsepower variable compression diesel engine, and Chrysler Defense selecting the AVCO Lycoming (now Honeywell International Incorporated) AGT1500. In November 1976, the government awarded Chrysler the

contract to build the first series of M1 tanks, having won the contract due to a number of technological advantages, including the use of the AGT1500 turbine engine (Zaloga & Sarson, 1993).

The DoD selected AGT1500 advanced gas turbine engine for a number of reasons. During the requirements development phase for the MBT70 and the XM1, combat developers considered many aspects of tank warfare that had evolved in the desert during the Yom Kippur War and other conflicts in the Middle East (Green & Stewart, 2005). Since these battles were fought largely with older armored systems, the limitations of these platforms and their impact in battle were clearly observed by those considering the capabilities required of the United States' next main battle tank. These experiences greatly influenced key aspects of the XM1's development, such as performance and survivability. To improve survivability on the battlefield, in addition to the physical and armor features of the M1, the AGT1500 provided superior acceleration and speed at a lighter weight compared to its diesel alternative. It also had the tactical advantage of being much quieter and not expelling exhaust smoke, which might betray the tank's location on the battlefield.

Although the 1,500-horsepower AVCR-1360-2 provided the necessary power required by the XM1 program, it did have shortcomings. The engine released undesirable exhaust smoke at start-up and during periods of high fuel consumption and demonstrated a lack of torque power at lower speeds—the exact moment it is needed most (Ogorkiewicz, 2001). Due to these conditions, Chrysler and the turbine engine were selected. Chrysler's submission of the XM1 is represented in Figure 3.

Figure 3. Chrysler Defense XM1
(From Free Republic, 2004)

Another reason the Army selected the AGT1500 was based on favorable experiences it had in switching to gas turbine engines for its helicopters in the early 1960s. In its aviation application, the Army found that turbine engines had longer service lives and significantly reduced lifecycle costs for operations and sustainment of those systems (Zaloga & Sarson, 1993). This observation was also thought by the Army to hold true as well for the AGT1500, which had 30% fewer parts than its diesel counterpart; however, ground conditions differ significantly from those in the air which can introduce distinct challenges for maintaining this turbine engine (Green & Stewart, 2005).

The AGT1500, although demonstrating impressive performance, did present a number of concerns. One of the most notable issues with a gas turbine engine is fuel consumption, and the AGT1500 is no exception. The engine consumes 0.6 gallons of fuel for every mile travelled compared to similar diesel engines (1,500 HP General Dynamics MTU883 in an Israeli Merkava Mk4) at 0.84 gallons per mile

(Defense Update, 2006).[2] Thus, it would require substantially larger logistics trains to sustain the M1 in extended operations. Additionally, although the AGT1500 has fewer parts than other engines, it operates at higher temperatures and rotational velocity, which requires designers to manufacture the engine's components with greater precision and of more complex materials than those used in reciprocating diesel engines. These factors led to a precision overhaul process that requires highly skilled labor, special equipment and increasingly expensive repair parts. Despite these realities, the AGT1500 was selected at the insistence of the Department of Defense and remains exclusively in use in all M1-series tanks (Green & Stewart, 2005).

C. AGT1500 GAS Turbine Engine Developmental History

Through the entire lifecycle of the M1 Abrams, the AGT1500 engine has been its companion. Since initial production of the engine in 1979 until the last new AGT1500s were delivered to the Army in October 1995, no fewer than 12,162 engines have been produced (Honeywell, 2005). Since 1995, to meet the Service's demand, most AGT1500s have either been requisitioned new from remaining supplies in the Army supply system or rebuilt at the Anniston Army Depot in Alabama—a process that returns the engine back to zero-hour, or like-new condition.[3] In fact, many engines have now been overhauled multiple times, each time incorporating durability and process improvements that extend the service life of the engine. Before discussing the TIGER AGT1500 in detail and the process of this overhaul, we will describe the basic workings of the current engine and the variants of the engine preceding it.

---

[2] For a more accurate comparison, a side-by-side test would be conducted in the same conditions. Fuel consumption varies significantly based on the duty cycle of the tank.

[3] Engines have also been rebuilt at the Kansas National Guard, in depots in Germany, as well as at Honeywell's Greer, South Carolina facility.

1. AGT1500 and Modular Breakdown

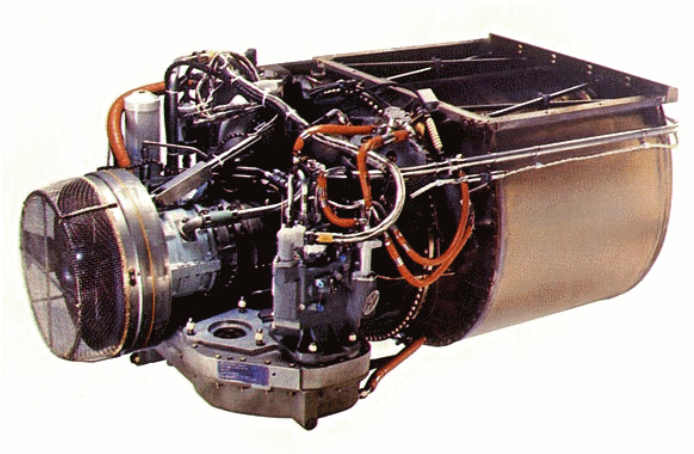

Figure 4. Honeywell AGT1500 Turbine Engine
(From Honeywell, 2005)

With regard to the performance and structure of the engine, the AGT1500 has largely remained the same since its creation. The engine provides up to 1,500 horsepower to propel the tank at speeds up to 42 miles per hour[4] on level road and also generates up to 18 kilowatts of electricity to power the increasing number of systems onboard the tank (Chait, Lyons, & Long, 2005). This 1,500-horsepower, in comparison with the M1's weight, yields a desirable horsepower-to-weight ratio of 21:1.[5]

The engine is divided into four separate modules: the forward module (FM), the rear module (RM), an accessory gearbox (AGB) and a reduction gearbox (RGB). Figure 4 is an image of the engine in its entirety, and Figure 5 shows the breakdown of the various modules of the engine.

---

[4] The M1A2's speed is governed at this level.

[5] Modifications to the M1—to include the Tactical Urban Survival Kit (TUSK)—have added additional weight, thus lowering this ratio.

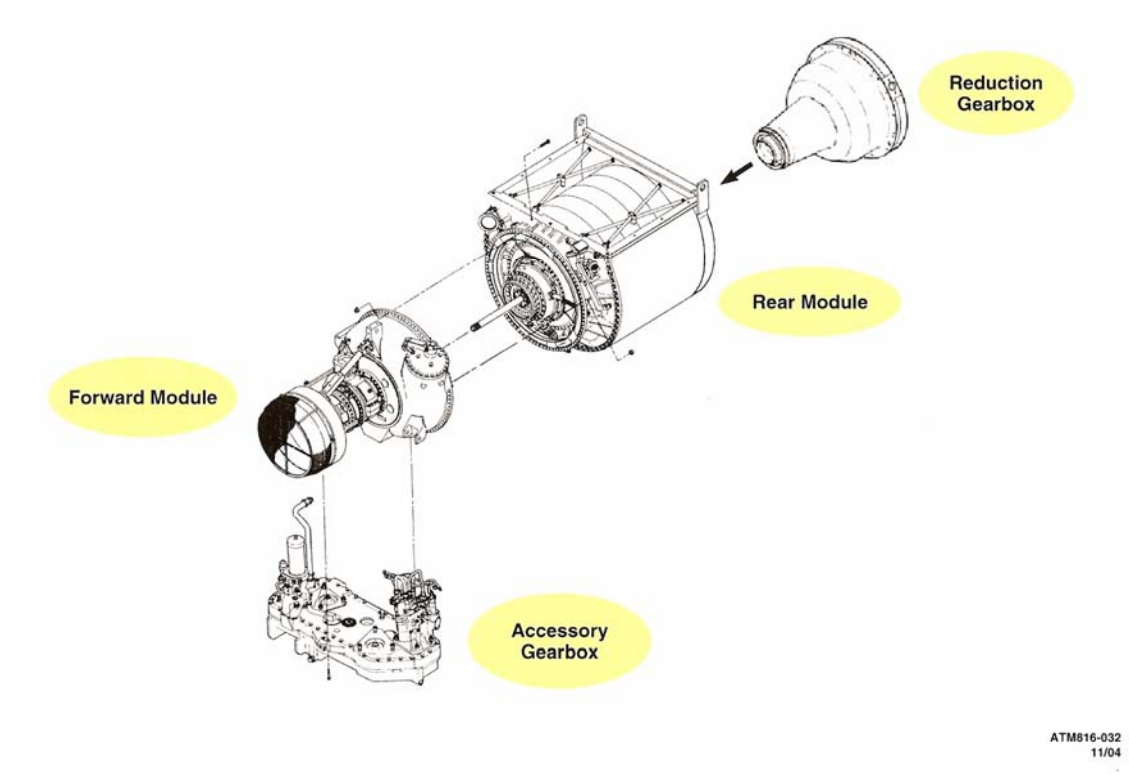

Figure 5. AGT1500 Modular Breakdown
(From Honeywell, 2005)

The forward module (FM) consists of an inlet screen and inlet housing, including variable inlet guide vanes (IGV), low-pressure (LP) compressor, intermediate housing, high-pressure (HP) compressor, air diffuser assembly, combustor and HP nozzle and turbine. The FM also provides the mounting for the accessory gearbox (Honeywell, 2005). Additionally, the FM provides the mounting for the Engine Memory Unit (EMU) and hour meter (HM) for TIGER engines. The rear module (RM) consists of the LP nozzle and turbine, power turbine assembly and recuperator. It also provides mounting for the reduction gearbox (Honeywell, 2005).

The accessory gearbox (AGB) provides the mounting and mechanical drive for the engine's starter, oil pump, electro-mechanical fuel system (EFMS) and the vehicle's hydraulic pump. Power for the AGB is derived from a 1:1 gear ratio from the intermediate housing of the FM (Honeywell, 2005). The reduction gearbox (RGB)

occupies the rearmost portion of the engine and is the interface between the engine and the transmission. Its purpose is to reduce the turbine shaft speed to an output shaft speed appropriate for the M1's Allison X1100 transmission (Honeywell, 2005).

The designers of the engine intended the modules to provide ease of maintainability and to enable maintainers at the direct support and depot levels of repair the ability to swap inoperable modules for functional ones, reducing the time required to repair the engine. Maintenance strategies like the Direct Support Plus (DS+) program empowered Direct Support-level maintainers with the ability to perform these modular repairs. The Army later cancelled this program because the lack of expertise by DS-level maintainers diminished the engine's reliability. An underlying concern with DS+ was that military personnel, who were not experts in turbine repair maintenance, might have been introducing errors that reduced turbine component life. Today, Honeywell's Field Service Engineers (FSE) are able to perform fourteen tasks, including the repair and replacement of the AGB, increase the engine's mean time between depot return (MTBDR). Further discussion of these tasks will follow later.

Through the years, there have been three different contracts focused on improving the AGT1500's durability. Durability improvements in this case refer to the reengineering of engine parts to increase the engine's useful life from one overhaul to the next (or MTBDR) and other processes used to extend service life, such as error-proofing the overhaul process. These three contracts are referred to as Service Life Extension (SLE), Partnership for Reduced Operations and Support Costs Engine (PROSE), and, the focus of this study, Total Integrated Engine Revitalization (TIGER). We will consider each contract separately.

2. Service Life Extension (SLE)

The SLE program for the AGT1500 began in January 1997 with the award of a contract to Allied Signal Engines Corporation, which later became Honeywell

International Inc. The initial contract set in motion a number of changes to the overhaul process. Honeywell's TIGER program manager put it this way:

> SLE was not a program to convert engines—it was a new philosophy or method of repair in which ANAD-TVS switched from an inspect and repair only as necessary (IROAN) program without any engine data to a full disassembly, inspection, reclaim and reassembly process using a recommended set of mandatory replacement parts. (Marsh, 2009)

TACOM sought this change after a number of years of declining reliability of the standard AGT1500. Marsh also explained that the causes of engine failure were attributed to workmanship, assembly process and component design deficiencies. Consequently, TACOM solicited the AGT1500 original equipment manufacturer (OEM) to develop a program that would increase engine durability. The OEM proposed that all engines returned to depot should receive a 100% disassembly, and that ANAD should individually inspect all components. Since previous operational time was unknown, the OEM also recommended the mandatory replacement of specific components. The mandatory replacement would reduce the risk of premature failure upon their return to service (Marsh, 2009).

Eventually, ANAD brought about 7,000 engines to the SLE standard (Burkhart, 2009). Some of the improvements of the SLE engine over the standard AGT1500 were as follows:

- 41 process improvements
- 31 required part replacements (including all main bearings and seals, seal runners, power shaft sealing and nut components, AGB seals, High-pressure Turbine nozzles (HPN), HPT cylinders, and HPT blades)
- 4 engineering change proposals (ECP)
- Use of a 100% laser-welded recuperator (improving fuel efficiency)
- Mandatory replacement of the combustor curl. (Quintus, 2009)

These improvements allowed the Mean Time between Failure (MTBF) (not MTBDR) of the engine to be raised to approximately 750 hours, doubling its reliability over the standard initial AGT1500 (Hoffman & Gunnels, 2009).[6] These improvements were gained at an initial cost to the PM of approximately $130,000 per engine in FY97, increasing to approximately $190,000 in FY07. The increase in cost over the years was primarily attributed to the increased cost of improved parts (Burkhart, 2009).

During the SLE program, ANAD completely disassembled and rebuilt engines at the ANAD Turbine Drive Train Division (TDTD) Turbine Value Stream (TVS). In addition to the introduction of new durability parts, ANAD instituted the process of reclaiming parts for reuse, bringing added value to the efforts of ANAD TVS. Currently, 427 SLE engines remain in the supply system and are available for requisition supporting those units still using the SLE engine (C. Causley, personal communication, September 4, 2009).

An interesting outcome of the TIGER program has been that requisitions for SLE engines have declined sharply since the introduction of the TIGER AGT1500. One reason for this could be the warfighter's desire for the new capabilities of the TIGER AGT1500. More likely is that all SLE and TIGER engines are listed under the TIGER engine's prime National Stock Number for requisition (2009). Whatever the cause, the PM, TACOM, and Honeywell have contemplated a plan to bring these "zero-hour" SLE engines remaining in the supply system up to a "TIGER-like" standard without going through the cost of a complete TIGER-reset overhaul. This limited upgrade would provide these engines with parts to address known durability issues with the SLE, EMUs and HMs so that ANAD could collect useful information from the engines when they return for overhaul. Although the PM, TACOM and

[6] TACOM anecdotally provided the MTBF of 750 hours. No data was provided to support this claim; however, it is widely accepted.

Honeywell are currently discussing these plans, no action has taken place (Voss, 2009).

3. Partnership to Reduce Operations & Support Costs Engine (PROSE)

The PROSE program, starting in 2000, was a Program Management (PM)-funded initiative born out of the need to reduce the costs of maintaining the AGT1500 during the development of the LV100-5 turbine engine (Abrams/Crusader Common Engine ACCE). This turbine engine was jointly developed by General Electric and Honeywell and was intended to replace the AGT1500 in the M1 Abrams and become the engine for the Crusader artillery system (General Electric, 2002). As part of the Abrams Integrated Management (AIM) program, the PROSE program focused on reducing engine costs by improving durability and reducing maintenance costs, which were calculated to be approximately 60% of the Abrams total operations and support cost (GlobalSecurity.org). These engines were primarily fielded to M1A2 SEP-equipped units at Fort Hood, Texas, and to the Australian Army (Quintus, 2009).

PROSE was initially a two-tiered program. The first tier was the development of increased durability parts and improved processes to overhaul the engine, yielding an increased MTBDR. Honeywell (considered the AGT1500's original equipment manufacturer) was responsible for developing the improved bill of material (BOM) for the AGT1500 while it simultaneously developed the LV100-5 with General Electric, as these two shared a number of parts in common.

The second stage of PROSE would have started with the implementation of "on-board electronic diagnostics and health monitoring and an on-board electronic log book, or data memory module (unit) (DMU)" ("Sustaining," 2009). Before any actions were taken to improve the electronic monitoring systems, the program was cancelled, except for the improvements made to the overhaul parts kit. PROSE also advocated the concept of limited overhaul based on the information provided by the

engine's onboard memory unit and other diagnostics intended to guide the overhaul process. These elements of the PROSE program were envisioned to reduce operations and support cost by up to 66% ("Sustaining," 2009). However, after the cancellation of the Crusader program in May 2002, the Army ceased pursuit of the LV100-5, which opened the door for the eventual TIGER.

Over the course of the PROSE program, over 900 engines were built to the PROSE standard through the process of overhaul at ANAD at a cost to the PM of approximately $250,000 per engine (Quintus, 2009). The improvements over the standard AGT1500 and the SLE model and processes were primarily the following:

- Zero-timing of the Electro Mechanical Fuel System (EMFS)
- Kitting process
- Latest engineering change proposals (ECP)
- Field service engineers to locations equipped with PROSE engines
- On-site engineer support at ANAD
- Honeycomb air seals
- Low-pressure turbine (LPT) disk knife repair
- Improved scroll
- Banded #5 carbon seal
- Improved #7 seal
- Full-flow chip collector
- Hour meter
- Stabilized high-pressure (HP) cylinder
- Pyro-cleaning of power turbine (PT) and #5 housing, and #6 spacer set (Milanov, 2009).

With regard to the improvements brought forward by the PROSE program, one of TACOM's AGT1500 engineering representatives stated,

> It should be noted these durability improvements were never considered the biggest benefit of the program. The benefit that proved its value to the point the PM wanted to continue this PROSE program on a bigger scale called TIGER was that Honeywell provided parts from quality suppliers on time to the depot along with [field service engineers] making sure the right troubleshooting and subsequent repairs were occurring. (Milanov, 2009)

These improvements are still represented today in the TIGER program. Due to the cancellation of the LV100-5—the only planned successor for the AGT1500—it was apparent that the current engine would be kept in service longer than anticipated. With this new reality in place, the TIGER program emerged to continue to enhance the durability of the engine and implement the new processes that the PROSE program had intended.

4. Total Integrated Engine Revitalization (TIGER) AGT1500

In December 2005, Honeywell International was awarded a three-year, fixed-price services contract with the option of two additional years in the amount of approximately $1.2 billion (US Army Contracting Command, 2005). The contract (W56HZV-06-C-0173), which is currently in its first option year, tasked Honeywell to increase the durability of the AGT1500 to 1,400 hours MTBDR and improve many other aspects of the AGT1500 logistical support system. As stated in the contract, "The TIGER program will increase the reliability of the AGT1500 engine by improving the overhaul processes to a near-new engine standard, including durability based design improvements and will provide the support to ANAD for the overhaul of approximately 1060 each AGT1500 engine equivalents per year" (US Army Contracting Command, 2005). Under this contract, Honeywell was responsible to provide the following:

- Technical/quality assistance to improve the ANAD National Maintenance Work Requirements (NMWR) overhaul processes, including utilization of Six Sigma techniques and Lean processes (CBO falls into this category)
- Root-cause, corrective-action analysis (TRAP facility at ANAD)
- New hardware required to meet the performance specification (durability parts)
- Kitting support/inventory management for both new and reclaimed items required to support the ANAD AGT1500 Engine overhaul line; the field service/warranty shops, and data collection and Technical Data Package maintenance (supply chain management) (US Army Contracting Command, 2005)

Considering these specifications, the new TIGER engine has a number of modifications that distinguish it from previous models. Most notable is the increased number of durability improvement parts and the addition of the EMU and HM. The EMU and HM are represented in Figure 6, with the EMU being the smaller of the two components.

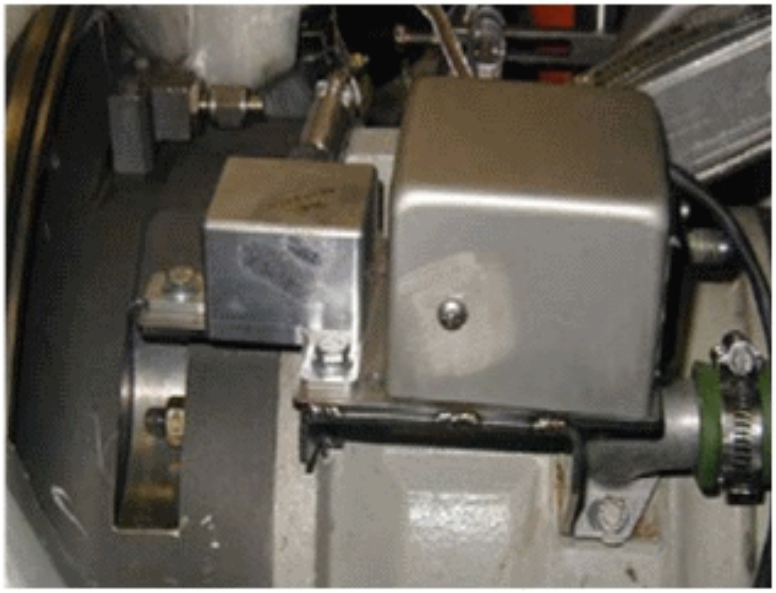

Figure 6. EMU and Hour Meter Installed on AGT1500
(After Honeywell, 2009)

EMUs were initially proposed during the PROSE program; however, due to power-supply issues (which had to be resolved by GDLS), the M1's material developer, it was not until February 2009 that any EMUs were installed (TACOM Contracting Center, 2009).

The EMU device is attached to the engine's Digital Electronic Control Unit (DECU) via a mechanism called a "sidecar." The DECU, the "brain" of the engine, monitors and controls many aspects of engine performance, including temperature at various positions in the engine, compressor speed, air pressure levels, fuel flow, and turbine blade positioning. The DECU controls the engine to provide the M1 the requisite amount of power based on external factors, such as ambient temperature and elevation.

The EMU linked to the DECU records relevant data points that prove valuable to the CBO process. David Marsh of Honeywell explains how EMU analysis provides insight to the overhaul process:

> Turbine engine component parts fail under a variety of mechanical wear-out mechanisms such as low-cycle fatigue, high-cycle fatigue, creep, stress rupture, corrosion, etc. Each of these failure mechanisms is analytically evaluated during the design of each engine component, and partially evaluated during development testing. Operating engines in a real world environment may produce slight differences in the failure characteristics of parts, or interactions between failure modes, that needs to be understood to maximize the useful service life of each part. EMU data analysis has two critical functions:
>
> - [It calibrates] the algorithms to align the prediction of part failure for each failure mode to the actual time to part failure for all critical engine parts; and
> - [Uses] this calibrated algorithm to enable use of all critical life-limited parts for as long as possible, but to retire these parts prior to the point at which they have a high probability of failure in the engine – that is maximize their useful service life.

Another key element of EMU data analysis is to identify operator-caused damage/significant life reduction. There are several operator actions that can significantly reduce the life of an AGT1500 engine. Two examples are offered:

- Overriding the 2-minute cool down will increase the probability that the hot end of the engine will experience oil coking damage from the increased soak back temperatures caused by the lack of a cool down cycle. The number of no-cool down shutdowns is recorded in the EMU.
- Attempting to start the engine after a series of failed starts without conducting a fuel purge engine roll-over. No-purge starts result in excessive fuel in the hot-section of the engine, and when the engine lights-off can result in significant "torching" and heat-induced damage to the hot-section of the engine. No purge starts are recorded in the EMU. (Marsh, 2009)

By capturing conditions at each engine start up and shut down—such as number of hot and cold starts, shut down conditions, temperature levels at various locations in the engine, turbine and compressor speed, and other data points—technicians can evaluate the engine based on Field Service Reports (FSR). These FSRs and inspections determine the extent of overhaul required to bring it to "near-new" condition, as stated in the contract. Highlighted in Figure 7 are sensors currently supplying information to the EMU for analysis.

Another element unique to TIGER is the hour meter that provides critical information to the overhaul process by including the actual number of hours the engine was operated. With this component, the life-limits of parts can be tracked, which is a major factor in the CBO process.

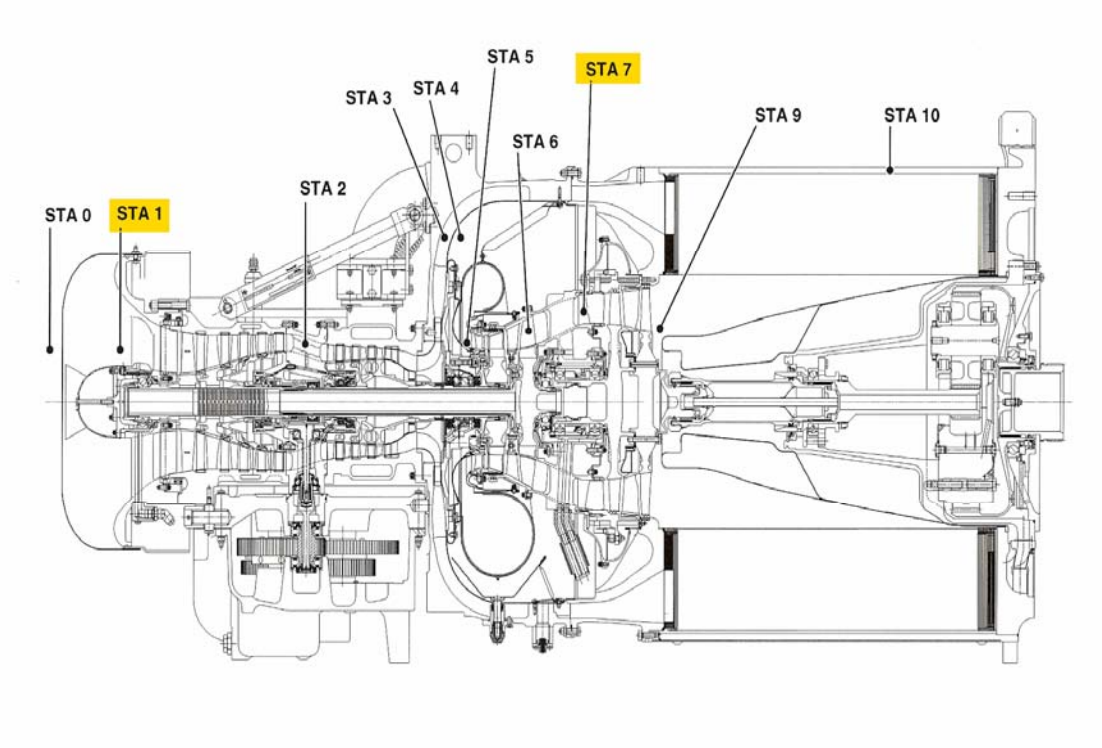

Figure 7. AGT1500 Sensors Providing Data to the EMU
(After Honeywell, 2005)

To achieve the durability requirements as specified in the TIGER contract, Honeywell has reengineered a number of parts to enhance each part's lifespan. An example of some of these improvements is presented in Table 1, which lists these parts and program year of improvement (Honeywell, 2009). We should note that Honeywell has not yet achieved all of these improvements; however, all are in some state of development or under decision.

Table 1. TIGER Durability Projects by Program Year
(After Honeywell, 2009)

PY	TIGER Durability Project
Initial	*
	*
	*
	*
1	*
	*
	*
2	*
	*
	*
	*
	*
	*
3	*
	*
	*
	*
4	*
	*
	*
	*
	*

* This table contains proprietary information and has been sanitized.

D. Honeywell Tiger Contract Requirements In Relation To Condition-Based Overhaul (CBO)

The TIGER contract issues a number of other requirements that are pertinent to the CBO process. In fact, the TIGER contract does not mention Condition-based Overhaul, but rather refers to it as Fact-based Overhaul. The process was not officially referred to as CBO until the publication of the *Justification and Authorization* dated June 15, 2009. This change of terminology was meant to bring the process more in line with the US Army's CBM+ directives (TACOM Contracting Center, 2009). As we discussed previously, the EMU, HM, and improved durability parts are all intended to help the TIGER AGT1500 engine reach its durability goal of 1,400 hours MTBDR. Additionally, elements such as the Fact-based Maintenance (FBM) database, Electronic Manufacturing Operations and Tooling workstations (eMOT), and commercial process improvements are also included to facilitate the CBO process.

The FBM database is a Web-based central repository for existing AGT1500 engine data and provides a networked method for analyzing an engine once it has arrived at ANAD for CBO. This database allows technicians to access information such as field service reports (FSR) that discuss previous maintenance tasks completed by TIGER Field Service Engineers (FSE). The database also provides information towards disposition of engines and can be queried in a number of ways to yield required information by Honeywell, ANAD, TACOM, the PM, or others with access.

As a requirement of the contract, TIGER FSEs are strategically located in both the contiguous United States (CONUS) and overseas to provide units with technical support and limited repair of the TIGER AGT1500. These FSEs are authorized to complete fourteen different repair tasks beyond what is permitted at the organizational level of maintenance. These authorized tasks, listed in Table 2, serve to extend the service life of the engine in the field, thus avoiding the need to

have the engine sent back to ANAD TVS for repair and effectively increasing MTBDR.

Although the CBO process has yet to take root at the ANAD TVS facility, the Electronic Manufacturing Operations and Tooling (eMOT) system has. The eMOT system is a PC-based, step-by-step instructional guide reflecting the NMWR. Developments to this system in the future may one day include the steps required for each tailored overhaul scope of work under CBO.

The eMOT essentially guides technicians and laborers through the analysis, disassembly, and reassembly of each module, prompting the user at times to enter critical data for the CBO process, such as part serial-numbers and measurements. These steps systematically help to ensure the engine is assembled properly, increasing First Pass Yield (FPY) rates at ANAD TVS and capturing information that tags life-limits to serial numbered parts that can potentially make CBO a cost-saving option for overhaul. Honeywell will continue to update the eMOT system based on the TIGER contract to reflect changes in the NMWR, as well as those beneficial procedures discovered during the execution of CBO.

Table 2. Authorized Field Service Engineer Repair Tasks
(From Honeywell, 2009)

*

Task #	Historical Task #	Task Description
1	101.2	*
2	102.2	*
3	106.1	*
4	202.2	*
5	202.5	*
6	202.6	*
7	203	*
8	203.1	*
9	203.2	*
0	301.2	*
1	401.3	*
2	401.5	*
3	501.1	*
4	501.2	*

This table contains proprietary information and has been sanitized.

Lastly, as it pertains to CBO, the TIGER contract specifies that Honeywell is to

> Develop process improvement recommendations to be utilized in the depot repair procedures, repair or replace decisions, parts integrity, commingling and mix-and-match criteria, assembly instructions and acceptance test procedures. These recommendations will include introducing non-proprietary commercial repair processes and procedures for gas turbine propulsion engines, which are relevant to the AGT1500 engine at ANAD. (US Army Contracting Command, 2005)

This contract points to the changes that Honeywell has recommended toward the CBO process, previously envisioned during the PROSE program. Honeywell also has a track record at its own repair facilities of using such a condition-based approach for defining customized scopes of work to overhaul turbine engines. The contract also indicates that Honeywell is to work alongside ANAD to develop this process since all of the work performed for CBO will be conducted at the ANAD TVS facility.

E. Previous Overhaul Strategies

Prior to discussing the current overhaul process and proposed process for CBO, it is important to consider some of the previous strategies used. Two such strategies provide an analogous look at how CBO might be implemented and some of the potential outcomes. The Inspect Repair only as Needed (IROAN) and Direct Support Plus (DS+) programs both share similarities with the proposed CBO process and serve as a framework for comparison.

1. Inspect Repair only as Needed (IROAN)

The IROAN program emerged in the Services in 1992 with the intent to reduce repair costs by avoiding unneeded work that could be identified by inspections and comparison with standards. Perhaps the most definitive document related to the IROAN process is the *US Marine Corps' Military Standard MIL-STD-91621 (MC)* dated November 1992. In this document, IROAN is defined as, "That

maintenance technique which determines the minimum repairs necessary to restore equipment, components, or assemblies to prescribed serviceability standards by utilizing all diagnostic equipment and test procedures in order to minimize unnecessary disassembly and parts replacement" (Marine Corps Systems Command, 1992). Similar to the CBO process, which will be discussed in the next chapter, systems are inducted into the IROAN process and receive a detailed inspection using diagnostics in the form of Simplified Test Equipment—Internal Combustion Engine (STE—ICE) test system, dynamometer testing, and oil sampling to determine if the engine requires repair work (Marine Corps Systems Command, 1992). During the process, maintainers follow an IROAN checklist in conjunction with applicable technical manuals and Depot Maintenance Work Requirement (DMWR, now National MWR or NMWR) to specifically guide the disassembly and repair process to only address those areas requiring attention. Inspections are performed throughout the process to verify the serviceability of parts and ensure that the repairs are completed to standard, returning the system to serviceable condition.

The Army also has implemented the IROAN process at a number of locations including ANAD TVS. ANAD TVS first began to use IROAN principles in the mid-1980s but did not institute the IROAN program officially until 1992 (Gunnels, 2009, September 11).[7] The IROAN process, as outlined by Gunnels, is still in effect, but for only a select number of AGT1500s based at Fort Knox, Kentucky (the home of the US Army's Armor School). Due to the excessive wear on these engines and in an effort to save money, the IROAN program was applied to these engines. As Gunnels described, the IROAN process follows these steps based primarily on 10- and 20-level maintenance manuals:

> Step 1: All [metallic] chip detectors are checked for excess metal. If nothing abnormal is detected, the process continues. These magnetic plugs detect the presence of metal shavings in the engine's oil.

[7] IROAN is actually referred to as IRON at ANAD TVS, but refers to the same process.

> Step 2: Check all modules for rotation. If the modules spin freely with no unusual noise, then proceed with dynamometer testing.
>
> Step 3: During dynamometer testing, based on feedback from the performance data technicians, identify and replace all damaged parts or any visible leaks.
>
> Step 4: Technicians replace all filters, remove and inspect fuel nozzles, and if some of the parts are not of the latest configuration, then they are replaced as well. Other parts such as starters, which had been experiencing many failures, are also replaced.
>
> Step 5: Once completely reassembled, the engine is tested on a dynamometer. If the engine passes the test specification (lowered by TACOM to 90% of the required 1,500-horsepower for an overhauled engine) the engine is returned to the field with no warranty (Gunnels, 2009, September 11).

The results of the IROAN program at ANAD have been mixed. The program has indeed reduced the cost of servicing the engine; however, as explained by Gunnels, customers have questioned the quality of the work due to both the inexperience of the technicians and sentiment from the field:

> The biggest issue was these engines, even though they met the lower performance test requirement we saw that they failed for bearing flows and other issues that required us to disassemble them most of the time. You would see parts inside the engine that were at the point of failure (example, first stage nozzle vanes burned through, curl ring thermal barrier missing, T-wheel rub at cooling cylinder excessive, #5 bearing severely coked, etc.). (Gunnels, 2009, September 11)

Other components related to the engine and tested in the IROAN process demonstrated similar failures:

> The other issue was with the Line Replaceable Units (LRU) (i.e., oil pumps, Electronic Fuel Management Systems (EMFS), etc.). Components that were tested as IROAN would pass on individual test stands for oil pumps and EMFSs; however, we found out that the life expectancy was short lived, and we would receive Product Quality Deficiency Reports (PQDR) due to these LRUs failing in the field. After we would get the LRUs back and disassemble them we would find out that several of the component parts were out of

> tolerance, contaminated solenoids, valves full of trash, rotors bad, etc. These pumps would pass the initial test requirements but would not last but a few hours before failure. This caused folks to rethink the IROAN philosophy for these LRUs and overhaul them. (Gunnels, 2009a)

The CBO process shares many similarities with the IROAN process, as described, but the PM hopes that improved inspection and repair procedures and data received from the EMU and HM will improve the effectiveness of this level of overhaul effort. If the process is successful, the Army may be able to realize cost savings in the range of roughly 40% to 60% of the cost of a standard overhaul (Gunnels, 2009, September 11). It remains unclear whether durability of the TIGER AGT1500 will improve or decrease by this cost-savings process.

2. Direct Support Plus (DS+)

In 1992, the Direct Support Plus (DS+) program commenced, allowing Divisional Main Support Battalions (MSB) of M1-equipped units the ability to perform many of the same tasks previously only authorized for depot-level facilities (McKernan, 2002). The purpose of the DS+ program was to minimize the maintenance down-time of tanks in the field, while also minimizing logistics delay time incurred by requiring engines to be automatically returned to the depot if the maintenance fault exceeded the unit's capability. Under DS+, Soldiers were able to perform some 13—expanding to 52 (Hoffman, 2009)—tasks on the AGT1500, to include repairing modules, replacing seals and bearings, and many other tasks (McKernan, 2002). These tasks were performed in accordance with available technical manuals as well as IROAN standards, as discussed in the previous section.

The DS+ program, although manpower intensive, did present a number of benefits, such as shorter logistics delay times, the ability to repair the engine near the unit, and some troubleshooting, knowledge-base building through training and experience, but the largest perceived benefit was cost savings. Similar to the proposed CBO and IROAN processes, trained mechanics under the DS+ program

examined the engine using available test and diagnostic equipment, determined which modules required repair, replaced those modules, and repaired the inoperable ones to later be mated with other engines. Based on the DS+ program, McKernan recounts,

> During fiscal year (FY) 2001, the net cost of buying an M1 engine (FEDLOG price minus unserviceable turn-in credit) was approximately $210,000. However, through DS+, the 2nd Infantry Division was able to repair 112 engines at an average cost of less than $60,000 [per engine]. The division was able to realize a cost avoidance of almost $17 million. (McKernan, 2002)

Although DS+ did appear at face value to save money, this apparent savings came at another cost: readiness. In FY 2001, new engines coming from the depot, primarily SLE engines, had an expected mean time between failure (MTBF) of 750 hours.[8] However, under DS+ this mean time dropped 66% to 250 hours, requiring repair work more often and decreasing the M1's readiness rates. Advocates of the DS+ program noted that for the price of a new engine ($210,000), the repaired engine could operate for approximately 875 hours through DS+ maintenance—at an average cost of $60,000 per maintenance event (McKernan, 2002). Opponents of the program pointed to the decrease in MTBF as being a significant issue, potentially reducing operational availability.

In 2002, the Army began to phase out the DS+ program in exchange for a two-tiered maintenance approach—sending the engine back to the depot for overhaul and not performing maintenance above organization level in the field (McKernan, 2002). The Army completed the phasing out of DS+ in 2006. One of the benefits of the DS+ program, was that it reduced the costs associated with repairing the engine; however, this reduction came at the cost to durability. Another cost associated with DS+ was the personnel cost, which was masked, in part, because DS+ shops were manned by Soldiers from original Table of Organization

[8] MTBF should not be confused with MTBDR, which doesn't take into account failures repaired in the field.

and Equipment (TO&E) strength. These Soldiers, tasked to DS+, were not performing the Direct Support-level maintenance they were intended to accomplish, so when DS+ was phased out and consolidated at the depot, units were able to reallocate these personnel and regain their value. Essentially, the decision between DS+ or depot overhaul depends on where the benefit is needed the most: reducing cost or improving reliability. As indicated earlier, this decision set in motion the move toward total overhaul of each engine for quality purposes.

F. Condition-Based Maintenance In Relation to CBO

Throughout this report, we have used the term *Condition-based Maintenance* (CBM) frequently. In relation to the CBO process, CBM has had its place in the discussion; however, it is important to clarify what CBM is and how exactly it relates to this process. This clarification is important because some often use the terms erroneously and synonymously in reference to the capability of engine's existing sensors and to the process that we are researching.

As defined in the *U.S. Army's CBM+ Roadmap*, "Condition-based Maintenance (CBM) is a proactive equipment maintenance capability enabled by using system health indications to predict functional failure ahead of the event and take appropriate action" (Headquarters, 2007). While CBO is not CBM, it does make use of data that is applicable to CBM and health monitoring of the M1 Abrams. In fact, the PM is currently developing the Vehicle Health Management System (VHMS) that utilizes many of the same sensors that CBO utilizes to inform operators, maintainers, and leaders of potential engine faults. Jeffrey Banks, an expert in the field of CBM at the Penn State University Applied Research Lab (ARL), describes VHMS as a system that, "involves the use of embedded diagnostic, predictive and prognostic capabilities on platforms, which enables condition-based maintenance, automated logistic functionality and real time asset status for mission planning and Command and Control (C2)" (Banks, 2008, Executive Summary). VHMS is a step in the right direction toward implementing the Army's goals of CBM+, but how does CBM pertain to CBO?

First, it is important to discuss the levels of CBM to explain the CBM capabilities that the TIGER AGT1500 provides to the CBO process. Essentially, there exist three levels of CBM capability: diagnostic, predictive and prognostic. As described in the *U.S. Army's CBM+ Roadmap*, "*Diagnostic* capabilities identify functional failures that have already occurred. *Predictive* capabilities identify impending functional failures without estimating remaining useful life, or time to failure. *Prognostics* capabilities identify impending functional failures with an estimate of time to failure, or remaining useful life" (Headquarters, 2007).

Although the TIGER AGT1500, equipped with the EMU and HM has the potential to provide data toward *predictive* and *prognostic* CBM capabilities, it possesses only limited *diagnostic* capability to inform technicians during the Pre-shop Analysis (PSA) phase of CBO about the conditions under which the engine has operated. In the *HBCT Vehicle Degraders Report* by Penn State University ARL, the analysis describes the AGT1500 as "having the potential for both diagnostic and predictive capability; however, the platform [M1] does not have the capability to utilize this information yet" (Banks, 2008, p. 47). VHMS would bridge this gap. In the meantime, the sensors in the engine have the potential to provide valuable information, useful in the CBO process. Refer to Appendix A for a list of data points derived from the engine's sensors and calculated engine performance data recorded by the EMU.

As an example of how sensors provide useful information for determining problems, engines are placed in a dynamometer test cell utilizing all of the existing engine sensors to provide useful feedback to help form the tailored scope of work for that engine. Figure 8 is an example of what data analysis might look like under CBO. This example, conducted during the Condition-based Reliability Analysis (CoBRA) exercise at Fort Knox, Kentucky, in August 2007, demonstrates how multiple sensors can be utilized to help isolate problems within the engine. In this case, a drop in NH (shaft) speed without a corresponding drop in fuel flow might point to a problem in the turbine (Banks, 2008). CBO analysts will use algorithmic

software that employs this type of sensor-data correlation to help guide them to problem areas in the engine and to aid in ruling out other problems.

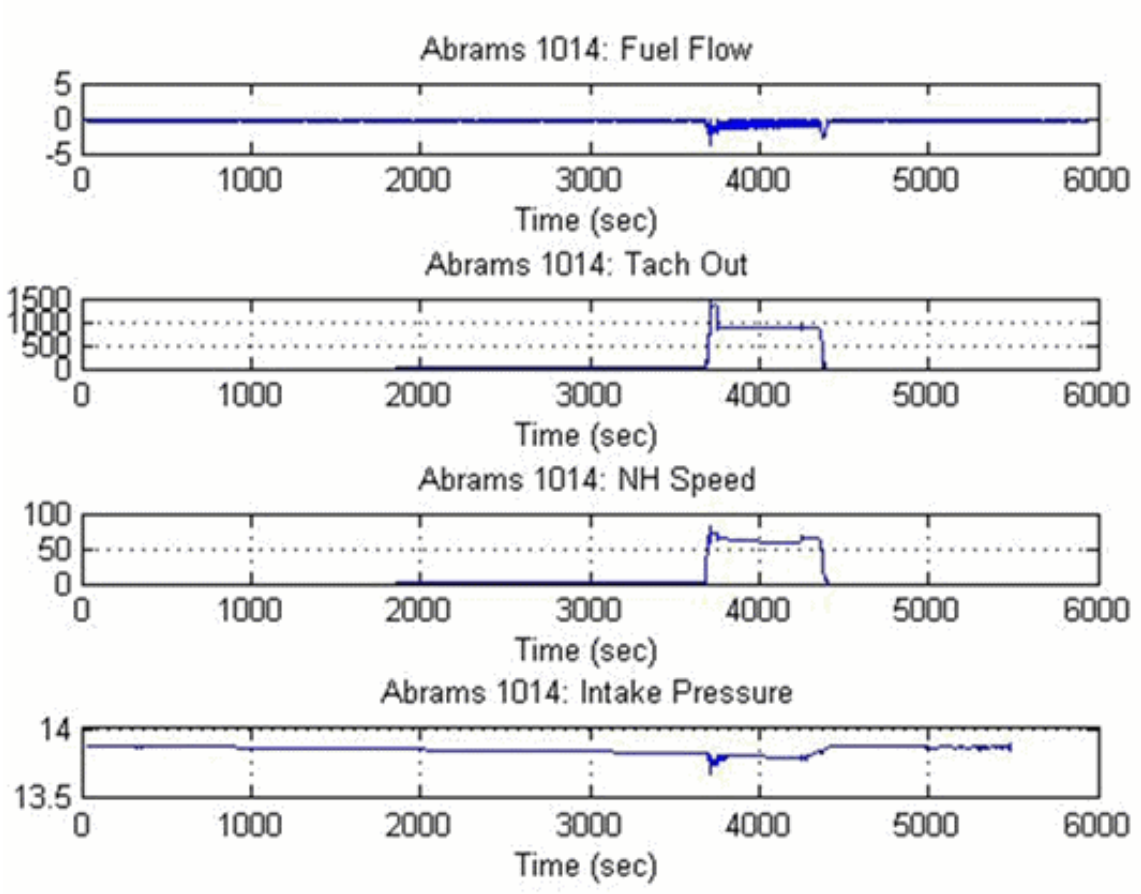

Figure 8. Example of Data Readout Correlation
(From Banks, 2008)

Although true prognostic CBM capability remains distant for the M1 and AGT1500, the use of the engine's existing switches and sensors to gain useful data towards performing maintenance operations is a step in the right direction. Also recommended by researchers at Penn State University's ARL is the replacement of data switches, such as the oil-level indicator, with a sensor that could capture in real-time the rate at which the engine is consuming oil. While speaking with TACOM's AGT1500 Quality Assurance team, one team member indicated that loss of oil was a major contributor to engine problems, including catastrophic failure (Clinton, 2009).

By effectively utilizing and improving the sensor suite the engine currently includes, there is a potential for recognizing and correcting impending failures before they occur, saving both time and money.

G. Chapter Conclusion

In this chapter, we provided the reader with information that will form a frame of reference as we further discuss ANAD's standard overhaul procedures and the CBO process. The background history of the engine, its performance and attributes, previous overhaul strategies, and CBM capabilities we provided in this chapter will give the reader a resource to reference as we present subsequent chapters. This information will also be valuable as we discuss and analyze the data that will form the basis for our cost-benefit analysis.

THIS PAGE INTENTIONALLY LEFT BLANK

III. Condition-Based Overhaul

A. Introduction

This chapter will facilitate the reader's knowledge and understanding of both the standard overhaul procedures used to perform the TIGER-sustainment overhaul (status quo) and what is referred to as Condition-based Overhaul (CBO). After describing the status quo overhaul, the proposed CBO procedure will be discussed, highlighting the changes from the standard process and laying the foundation for the data presentation and data analysis chapters. Through this, we will demonstrate how the CBO process attempts to achieve costs savings while maintaining the durability of the engine and, extending its useful life for the remainder of the M1's service life.

B. Brief History of Anniston Army Depot's Turbine Value Stream

Since the early 1980s, the Anniston Army Depot (ANAD) in Anniston Alabama has been the primary facility responsible for overhauling all AGT1500 gas turbine engines.[9] As part of the Army's Center of Technical Excellence for the M1 Abrams, ANAD's Turbine Value Stream (TVS) facility repairs and overhauls the M1's drive-train consisting of the Honeywell AGT1500 turbine engine, and the Allison X1100-3B transmission before returning them either to the field in M1s or to the supply system for requisition. The facility employs 297 people, occupies eight buildings on the installation, and maintains an annual operating budget of approximately $300 million (Gunnels, 2009, September 11).

ANAD's TVS facility currently employs a "one-piece flow" lean methodology that systematically disassembles and reassembles the engine in sequential steps, allowing for optimization of the process. The one-piece-flow method (continuous-flow

[9] The US Army National Guard operates a depot in Kansas to overhaul those engines accompanying Army National Guard M1s. These are primarily SLE engines.

concept) takes one piece, in this case an engine, from station to station. It does not wait for large batches of work-in-progress to gather before the batch moves forward to the next station. The goal of one-piece flow is to accomplish each step of the process correctly each time (Mid-American Manufacturing and Technology Center, 2009). This is a departure from the "bay-style" approach, in which one team of technicians and mechanics completely overhauls the engine. In fact, the transition to one-piece flow began over five years ago, when the facility started to use lean principles, moving away from the bay-style of overhaul. Through application of *kaizen*[10] events, ANAD TVS completely reorganized the facility to optimize flow and started using Electronic Manufacturing Operations and Tooling (eMOT) stations and *kanban*[11] resupply systems. ANAD conducted these changes, among other lean processes, to improve the flow of production. Due to high demand by TIGER-reset production and the optimization gained thus far, the current process only takes approximately 24 days to complete, with a *takt* time of two hours for engines leaving the facility (C. Gunnels, personal communication, June 23, 2009). *Takt* time, or rate time, is a term derived from the German word *taktzeit,* which refers to the rate at which products must be completed to meet customer demand (Polletta, 2009). Using this method , the facility was able to increase its first-pass yield (FPY) rates for engines being overhauled to nearly 100% (Gunnels, 2007). The FPY rate refers to the likelihood that an engine will successfully meet all dynamometer test cell standards on the first attempt and be ready for installation in an M1 or be returned to the supply system.

This transition to lean principles was required to meet the increasing demands of the M1 reset program due to increased operations tempo in Iraq and Afghanistan, as well as to typical production and field returns. These factors, including the reset of all AGT1500s to the TIGER standard, made one-piece flow a

---

[10] A Japanese word used to describe exercises intended to expose process issues.

[11] A Japanese term used to describe a process of parts positioning to enhance flow.

beneficial change. The outcome of these lean procedures has led to a reduction in the time required to overhaul the engine and a cost savings to the government through reduction in personnel, man-hours, and equipment required to perform the overhaul. In 2007, the ANAD TVS facility was recognized by The Shingo Prize for their lean processes and was awarded the Shingo Bronze Medallion for their achievement—a symbol of world-class production standards (Myrick, 2007).

C. Electronic Manufacturing Operations and Tooling System

Critical to both the standard and proposed CBO process, the Electronic Manufacturing Operations and Tooling (eMOT) system emerged in 2006 from the collaborative effort of ANAD TVS and Honeywell to streamline and error-proof the overhaul process. Required by the TIGER contract, the eMOT system was created to reflect the National Maintenance Work Requirement (NMWR) for the AGT1500 and guide the entire overhaul process. Like the NMWR, the eMOT system contains all Overhaul Inspection Procedures (OIP) specifying the limits for overhauling the engine as well as PRPs used during the process. The system is consistently updated to reflect changes based on lessons learned at the depot or from engineering analysis. The eMOT system also serves as a means to "error-proof" the process, improving FPY rates. The TVS's Production Improvement Manager described the eMOT system as follows:

> Interactive shop instructions that ensure standard work by walking the mechanic step-by-step through disassembly and assembly, without allowing the mechanic to jump ahead or bypass operations. The eMOT also requires the mechanic to input critical data such as serial numbers and gauge readings, previously captured only on paper, which is then stored on the Honeywell website for rapid access. (Gunnels, 2007)

Not only does the eMOT system provide a means of ensuring quality work, but it also serves to capture critical information that directly correlates to the requirements of the CBO process. Serial numbers of life-limited parts are recorded and must be tracked in conjunction with the other systems on the TIGER AGT1500. Mechanics are also required, at times, to measure critical component dimensions

during installation using precision measuring devices. These calculations, once verified as being within tolerance, are recorded in the eMOT and remain in the engine's build-history record until the next overhaul. The eMOT system aids in eliminating mistakes in the process that could either result in rework at a loss of time and money, or damage and lower durability in the field.

The eMOT system also allows for the systematic improvement of the process, communicating changes in the process to each station without requiring the NMWR to be reprinted or mechanics to be retrained. Mechanics simply execute the steps indicated by the eMOT, following the correct process for that station. Later, the eMOT system will also play a critical role in guiding the tailored overhaul determined by the CBO process. The eMOT's role in the CBO process will be discussed in more detail later in this chapter.

D. Standard Overhaul Process

Currently, all engines arriving at the TVS are overhauled to the TIGER-reset bill of material (BOM), which includes an extensive list of upgraded durability parts and other components unique to the TIGER AGT1500. The total cost for the TIGER-reset BOM is valued at approximately $400,000, the most expensive upgrade to the engine since its creation. With this increased cost comes the intended benefit of doubling the engine's MTBDR to 1,400 hours as compared to the SLE, and forms a baseline for utilization comparison given the EMU and hour meter (Hoffman & Gunnels, 2009). Over the lifecycle of the engine, this improvement will potentially save a significant amount of money in terms of operation and support costs. The current process follows these procedures and is represented in Figure 9.

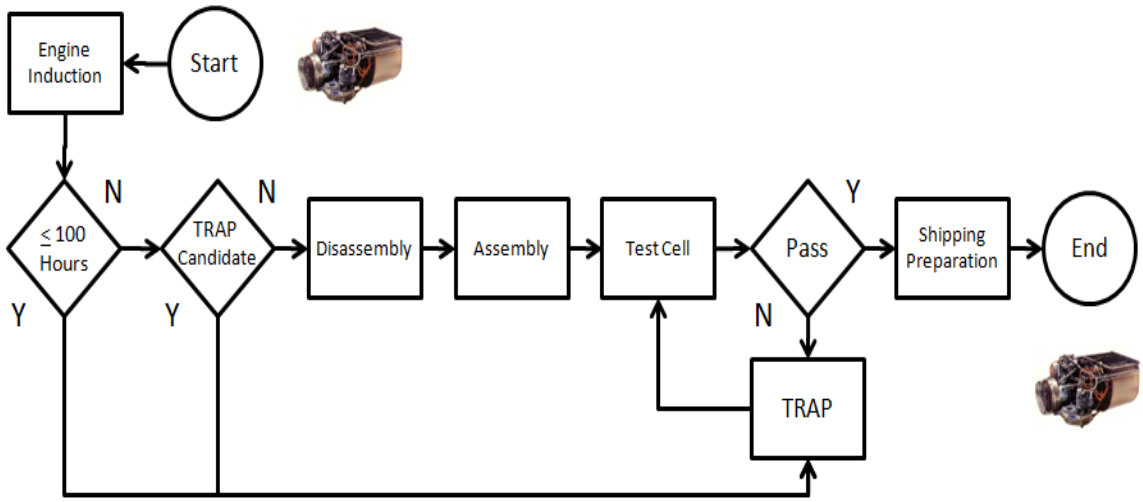

Figure 9. TIGER-Sustainment ANAD TVS Process Flow

1. Engine Induction

Before the overhaul process begins, engines are inducted based on demand dictated by programs funded by TACOM. Production schedules of M1s going through overhaul and anticipated field demand initiate a scheduled number of engines to be overhauled at ANAD TVS every month. Since fiscal year 2006, annual production of all types of AGT1500s has remained at over 1,000 engines—steadily shifting the weight of production away from SLE and PROSE to the TIGER standard (Anniston Army Depot Turbine Value Stream, 2009). Currently, about 1,600 engines have been overhauled to the TIGER standard, with another approximately 2,400 engines due to be overhauled to complete the obligation of the TIGER contract (Hoffman & Gunnels, 2009). It is anticipated that in the years to come, production could decline to approximately 300 engines per year due to reduction in operations tempo and in the overall size of the M1 fleet and increased durability of the TIGER AGT1500 (Hoffman & Gunnels, 2009).

Engines inducted into the process are received and then enter the one-piece flow of disassembly and assembly, being completely dismantled and rebuilt with

either new or reclaimed parts.[12] The TIGER-reset overhaul requires a majority of new parts, resulting in a greater cost than previous SLE and PROSE overhaul BOMs.

2. Turbine Repair Analysis Program (TRAP) Candidates

Prior to the disassembly of an engine under the standard process, ANAD analysts determine whether or not the engine is a TRAP candidate. Occasionally, engines will be returned to the depot with low operating hours or designated for Inspect Repair Only As Necessary (IROAN) from Fort Knox. The possible reasons for early return could be production quality issues not formerly identified, water intake during vehicle integration testing, shipping damage, or other circumstances. Due to the low hours these engines accumulate, in accordance with WPG-level 1, TRAP analysts can inspect and repair the engine, ensuring that it would still be capable of achieving 1,400 hours MTBDR. This cost-saving step prevents the engine from being completely overhauled. If analysts determine the engine to be a TRAP candidate it is sent directly to the TRAP, thus avoiding the other steps of the overhaul (Gunnels, 2009, September 28). For this research, we assumed that Fort Knox IROAN engines will be handled separately at ANAD and do not affect the average unit cost of the TIGER-sustainment overhaul. For TIGER-sustainment (which overhauls TIGER engines with the TIGER-sustainment BOM), engines with less than or equal to 100 hours will receive the inspections and maintenance in accordance with WPG-level 1. Otherwise, the process is identical to the standard overhaul process.

3. Engine Disassembly

Once scheduled for overhaul, the engine arrives at the TVS facility in one of two configurations: as a full-up power pack (FUPP) with the engine and transmission

[12] TIGER-reset engines overhauled using a majority of new parts. Previously, SLE engines were overhauled using a combination of both new and reclaimed parts.

mated, or as the engine alone. In either case, the engine is removed from its protective shipping container and then steam cleaned as required. The ANAD mechanics then begin the process of disassembly, completely dismantling the engine using the eMOT system and with the assistance of Honeywell technicians.

These mechanics initially disassemble the engine into its four main modules: forward, rear, accessory gearbox, and reduction gearbox. The forward and rear module, which are composed of a number of complex assemblies and most of the rotating turbine components, are further disassembled by mechanics at additional stations (the multiple stations are required to meet cycle-time goals). As customer demand increases or decreases, workstations can be added or removed to maintain the ideal cycle-time ratio (Smith, 2009).

At each disassembly station, parts are inspected by technicians who determine if reclamation is possible. Parts that can be reclaimed are examined according to the Parts Reclamation Procedures (PRP) outlined in the NMWR and receive a particular Depot Overhaul Factor (DOF), which specifies their recommended frequency of reuse. These parts are then returned to the Honeywell warehouse on ANAD and used at a later date—either as-is or after reclamation work has brought the part back to a like-new condition. Parts that have been damaged or are not reclamation candidates are discarded.

4. Engine Assembly

The assembly process for the TIGER-reset overhaul also follows the one-piece flow methodology; however, it is more segmented, with multiple stations working on the various modules of the engine in parallel. Once a particular station has completed its portion of the module, that module is then placed into a holding area called a *kanban*. The ANAD mechanics later bring these completed modules together and assemble them as a whole.

Parts for this process are provided from the Honeywell parts storage facility near the TVS. Based on production demand, parts kits composed of both reset and reclaimed parts (based on Depot Overhaul Factors) are delivered by Honeywell personnel in a timely manner to the various stations, as stated in the TIGER contract. This method reflects the logistical support aspect of this Performance-based Logistics (PBL) contract. As components of the engine are completed and retrieved from the *kanbans*, they are brought together to be reassembled into modules, and, ultimately, into complete engines. Throughout the process, inspections are conducted to verify the quality of the work performed. The engine is now ready for testing.

5. Engine-acceptance Testing

After the final assembly of the four modules and other ancillary components like the oil pump and Electro Mechanical Fuel System (EMFS), the engine is placed on a special cart and taken to the dynamometer test cell where the engine is connected to a system to gauge its performance. The dynamometer measures the performance of the engine through a variety of sensors that are located in both the engine and applied to the engine by test-cell technicians. These sensors measure the temperature, speed, power output, pressure and other aspects of engine performance while the engine is placed under strain induced by a pneumatic impeller water brake dynamometer system. While in the test cell, the engine's horsepower capability is determined and tuned to specification. For an engine to pass, it must produce 1,500 horsepower.[13] If the engine passes all required performance measures (as specified by various performance curves), then the process is complete, and the engine is placed back into its shipping container and reintroduced to an M1 or to the supply system. Successful completion of this step yields the FPY rate metric. The engine is then replaced into its protective shipping

[13] TIGER-reset engines must achieve 1,500 horsepower. All other engines overhauled must meet a 95% requirement of 1,425 horsepower.

container or mated with a transmission to be returned to field as a FUPP. In the later case, technicians additionally test the engine and transmission using a Standard Test Equipment (STE) ground-hop set and are assessed for any problems.

6. Turbine Repair and Analysis Program (TRAP)

Turbine Repair and Analysis Program was previously addressed in this chapter for engines returning with low hours; additionally, engines failing to meet the 1,500-horsepower requirement in the dynamometer test cell are also examined by technicians at the TVS Turbine Repair and Analysis Program (TRAP). These technicians, currently rated at General Schedule (GS) 9, are augmented by Honeywell technical assistance to analyze the engine and perform the required maintenance action.

As part of the TIGER contract, the TRAP was established in 2005 to aid in root-cause analysis for engines failing in the dynamometer test cell. Often, engines not meeting the test-cell standard simply need certain components adjusted to gain the optimal performance or to correct a mistake in the assembly process. With FPY rates in the upper 90th percentile, this is an infrequent occurrence, but it is an expedient method to complete the overhaul and gain valuable data about engine failures and process issues.

As indicated previously, the TRAP also analyzes engines that were returned to the depot prematurely for various failures in the field. By examining these engines, TRAP technicians can observe firsthand the effects of certain failures, building on their knowledge for future analysis.

The last situation requiring an engine to be examined in the TRAP is for Inspect Repair Only as Necessary (IROAN). As discussed in the previous chapter, IROAN engines from Fort Knox are inspected for faults, repaired, and then returned to the training installation at a lower cost, but also without a warranty.

Once an engine arrives at the TRAP, technicians disassemble it in accordance with the NMWR and eMOT system, scrutinizing it until the problem has been identified. Technicians complete a TRAP report for the engine, recording valuable information that is used to further improve processes at the TVS facility and identify possible trends. The engine is then repaired by TRAP analysts and returned to the test cell for final testing. All new engines must meet the 1,500-horsepower standard except those in the IROAN program, which are required to achieve only 1,350-horsepower by TACOM agreement (Gunnels,2009, September 11). Primarily designed to help improve the processes at ANAD TVS, the TRAP also serves as the initial departure point from the standard overhaul process to the CBO process.

E. Condition-Based Overhaul Process

Currently, the Condition-based Overhaul process at ANAD TVS is still in its infancy. It was only in August 2009 that TACOM, ANAD and Honeywell reached agreements regarding how to move forward to implement this new approach. The researchers are using these early agreements as a launching point for analysis, with the understanding that many changes will likely still occur before CBO truly takes its final shape years from now as fully "condition-based" overhaul. Thus, the figures we advance in this analysis are tentative and subject to change. The change to CBO will likely take place gradually, as data is collected and analyzed by Honeywell and ANAD during the Pre-pilot and Pilot phases of the program, and later as ANAD and Honeywell transition to a CBO-sustainment phase and then, eventually, to a mature CBO that reflects the goals of CBM.

During the Pre-pilot and Pilot phases of this transition to CBO, the ANAD TVS facility will continue to operate as normal by overhauling engines to the TIGER-reset standard. TIGER engines returning to the depot for overhaul are analyzed in the TRAP by TRAP analysts and Honeywell technical support. As the process transitions to the CBO-sustainment phase and as an increasing number of TIGER engines return to the depot, more pre-shop and disassembly analysis will be performed. This analysis will likely require additional personnel and shop space to

accommodate this aspect of the process. Additionally, as production demand decreases and the full number of TIGER engines have been reset to the TIGER standard, ANAD's work requirement may diminish—resulting in a reduction of personnel, equipment, and space required to accomplish the overhaul. A thorough discussion of the various aspects of the CBO process and its phases of implementation will give the reader an understanding of the analysis of the data for this research in view of both the 1000-hour (Honeywell advanced) and 500-hour (ANAD and TACOM advanced) alternatives for CBO-sustainment overhaul.

1. Pre-pilot and Pilot Phase

Recently, ANAD and Honeywell entered the Pre-pilot phase of the transition to CBO, which is expected to last until July 2010. This is an effort to build and analyze the data required to effectively implement the CBO process at ANAD and to solidify the work instructions required to overhaul the Pilot phase engines. Starting with a "proof of concept" (POC) engine, TRAP analysts—along with Honeywell support—will analyze the engine in the dynamometer test cell in a "run-as-received" (RAR) configuration. This approach allows analysts to understand how the engine is affected by wear and other factors, further assisting in root-cause analysis. ANAD analysts completely disassemble and inspect the engine using Overhaul Inspection Procedures (OIP) and Part-reclamation Procedures (PRP) designated in the NMWR and eMOT. Analysts also consider EMU and HM data in this process since the data can point to certain failure modes. The end-state for the Pre-pilot phase of CBO is for Honeywell and ANAD to establish a validated Work Planning Guide (WPG) to be used during the Pilot phase of CBO. The WPG is a crucial tool in the CBO process that guides the overhaul based on the number of hours attributed to tracked components in the engine. Appendix B includes a summarized version of the draft-WPG.

The Pilot phase for CBO consists of the detailed analysis of field-returned TIGER engines using the WPG, NMWR, eMOT, EMU, and HM data to begin the

process of correlating engine utilization to actual wear. As described by Honeywell's TIGER program manager David Marsh, "The Pilot program involves 30 to 50 TIGER engines being inducted and disassembled over a period of time, and covers the 'structured' complete disassembly and evaluation of the field returned engines, and subsequent structured evaluation of parts during the reclaim process" (Marsh, 2009). This phase, lasting approximately two years, will further refine the WPG and eMOT procedures. These refinements will be based on the trends identified by ANAD and Honeywell when considering how the engine was utilized (this information being provided by the EMU) and how the various components performed under those conditions. This data will also help to define the proper "bands" of operating time in which the engine receives a tailored overhaul to address the life-limits of parts throughout the engine. These bands will be discussed later in more detail.

Also considered during this phase are the field-diagnosed and documented causes for the engine's return that will also be correlated to usage and time. Because engines are returned to the depot due either to failure that caused the engine to be inoperable or to other conditions like a loss of power, it is logical that both the repairs to address these faults and other issues related to life-limited parts would be addressed in the CBO process. Once engines are inspected and disassembled, they are repaired according to the WPG, submitted to the test cell, and either returned to stock or to overhauled M1s as engines capable of achieving another 1,400 hours.

The Pilot phase will further codify OIPs and PRPs used in the process with an end-state of an updated WPG for the CBO-sustainment phase and eMOTs to reflect all of the changes up to this point. This phase results in a controlled, work-scoped disassembly to the desired level of overhaul rather than complete salvage disassembly, as in the current process. Based on the current schedule, the CBO-sustainment phase will not likely begin prior to FY 2013.

2. CBO-sustainment Phase

Once the Pre-pilot and Pilot phases of the CBO process are completed, TIGER engines will be overhauled using CBO-sustainment overhaul procedures. ANAD and Honeywell will continue to modify the procedures and algorithms used in this phase until a mature CBO process can be achieved by utilizing real-timediagnostics and prognostic CBM capability. Figure 10 represents the process for a CBO-sustainment overhaul. The red dashed line indicates the lower-hour alternative.

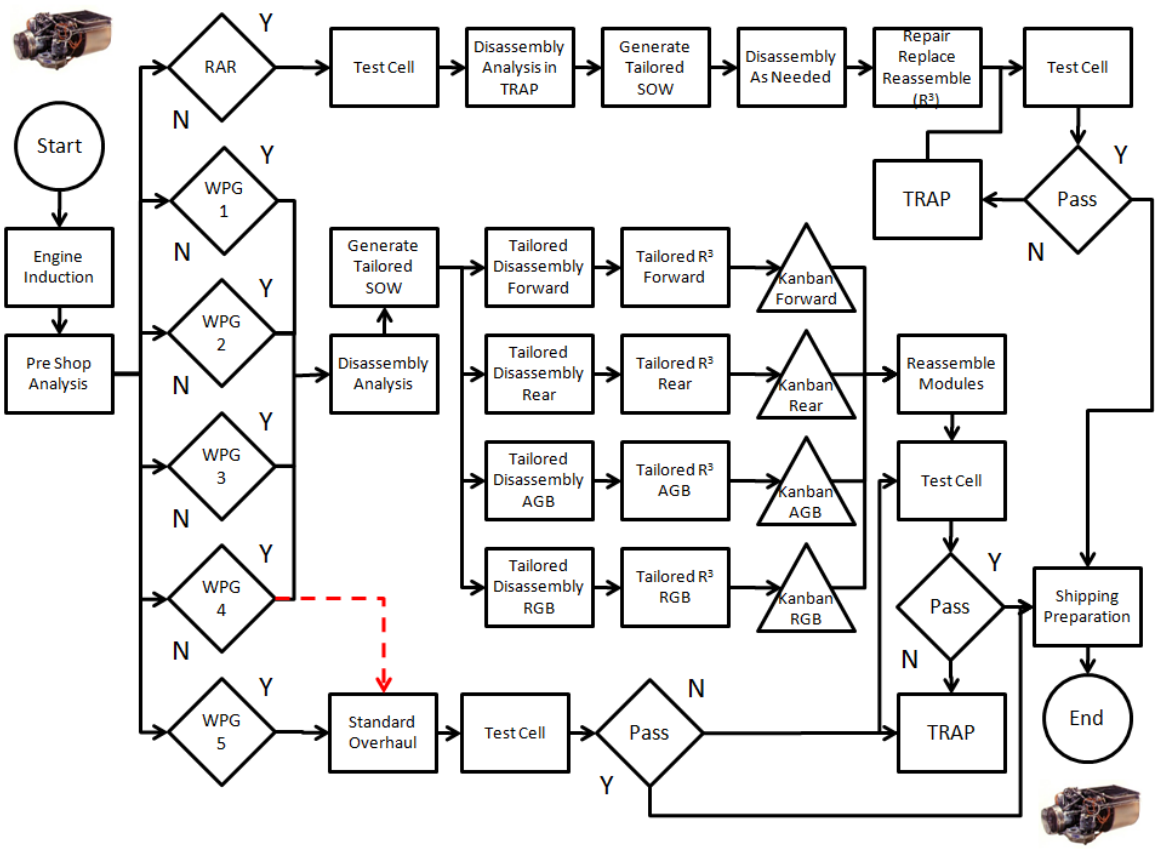

Figure 10. CBO-Sustainment Overhaul Process Flow

a. Engine Induction, Pre-shop Analysis (PSA), Disassembly Analysis (DA) and Run-as-received (RAR)

Engines entering this process will undergo an induction similar to that of the standard overhaul, based on production and field demand. During Pre-shop Analysis (PSA), analysts gather information from the engine and begin to compile a record that follows the engine through the process. This record includes the build history of the engine, which consists of all of the serial-numbered parts of the BOM used in the previous overhaul, as well as the EMU data, HM reading, and any Field Service Reports (FSR) existing for that engine. This data aids in forming the basis for Disassembly Analysis (DA) and the tailored overhaul scope of work (SOW). For analysts to consider an engine as a CBO candidate, it must possess all of this information. There is a possibility that some engines may return with malfunctioning EMUs or HMs, which will make it impossible for ANAD to accurately conduct a CBO overhaul. If this is the case, a more comprehensive overhaul would be required to ensure that durability goals can be achieved.

During DA, TRAP analysts begin the process of determining the exact level of disassembly required to repair the engine to the point that it can be returned to stock with confidence of reaching another 1,400 hours MTBDR. By utilizing the WPG, analysts assess the engine based on bands of operating time. These bands—currently divided into five levels—each specify a certain level of disassembly to access all of the parts and components that require either inspection or replacement. Honeywell initially determined these bands based on life-limits of parts, engineering data, and intuition of engine wear to establish the required inspections and replacement of parts and to ensure an additional 1,400 hours MTBDR. As noted by Honeywell, the CBO process will present the most benefit for engines returning with fewer accumulated operating hours. This is due to the greater amount of disassembly and parts replacement required for engines with higher operating hours (Quintus, 2009).

Beyond the WPG-level 4 time band, it is then recommended that a complete TIGER-sustainment overhaul be conducted in which the engine receives a complete overhaul, utilizing the TIGER-sustainment BOM. This is the most costly option for overhaul under the CBO process, but it is necessary in order to return the engine to service with a high likelihood of achieving 1,400 hours MTBDR. For analysis purposes, we will consider two alternatives: providing an estimate of total lifecycle costs based on these levels and representing the right point at which to conduct a TIGER-sustainment overhaul. As the CBO process continues in the future, additional failure and trend data will support the establishment of an adjusted point for this full overhaul to occur.

Once a thorough DA is complete, ANAD mechanics can begin the process of disassembly and reassembly directed by the tailored overhaul SOW. Although it does not exist yet, a networked system similar to or in conjunction with the current eMOT system will likely support this process. This system will employ algorithms to analyze the engine's condition and, based on PSA and DA, automatically determine the correct level of disassembly and the steps to achieve it so that the engine can utilize ANAD's current or modified one-piece flow assembly line. As more data is captured from analysis and EMUs, algorithms will be refined to yield a better overhaul process for each specific band of time. It is appropriate at this time to again mention that this method of overhaul still falls short of the potential benefits of a truly CBM-enabled overhaul. Nevertheless, this type of system will aid in reducing the time required to conduct the tailored overhaul of each engine and the cost savings associated with parts.

Run-as-received (RAR) candidates are those engines that return with no evidence of failure (NEOF) or only minimal damage that does not affect performance. These engines are handled differently from the standard process under CBO and will be discussed further in Chapter IV.

b. Engine Disassembly

After the engine has completed PSA and DA, the process of disassembly begins. Based on the tailored overhaul SOW, ANAD mechanics dismantle the engine in a controlled fashion by disassembling the various housing and components of each module, and either discarding or reclaiming parts as the eMOT directs in accordance with DOF guidance. At each step, they also inspect parts specified by the eMOT and record their condition to aid in data collection for later Honeywell analysis. They retain components with a remaining useful life of at least 1,400 operating hours or store them at the Honeywell parts storage facility on ANAD to be used later. The Army saves money by retaining parts with sufficient useful life. This is one of the benefits afforded by the CBO process.

It is likely that once ANAD dissembles the four modules of an engine, those modules will not be reunited with each other. This method is primarily to maintain production flow at the TVS facility. Some in the maintenance community assume that by maintaining engine integrity, the process flow would suffer greatly; however, some researchers feel that parts that have been previously assembled and run together as a system will operate better if they are integrated within all acceptable tolerances (Banks, 2009). Jeffrey Banks of the Penn State University Applied Research Lab suggests that, “it is like a doctor doing an operation. The body is better off with less cutting involved. Parts that have been worn together, just work better together if nothing else is wrong. Replacing parts with new ones can have a detrimental effect” (2009). Our research team discussed this matter with the PM, TACOM, ANAD, and Honeywell, all of whom have determined not to maintain engine integrity.

c. Engine Assembly, Acceptance Testing and Completion

The reassembly of the engine also follows the tailored overhaul SOW in the eMOT as dictated by the WPG, with the corresponding stations within the one-piece flow reassembling the engine. Honeywell delivers the parts needed for the tailored

overhaul to the assembly stations, where mechanics install them in accordance with the eMOT. Once the module is completed and inspected by ANAD personnel, it is placed in a *kanban* awaiting reassembly with other modules. As in the standard process, mechanics then combine modules to form a complete engine and subsequently place it in the dynamometer test cell to determine if it can meet the 1,500 horsepower standard. If the engine passes, ANAD returns the engine to the supply system in zero-hour condition and fully
expects it to achieve another 1,400 hours MTBDR. If the engine fails in the test cell, as before, mechanics return it to the TRAP for analysis, repair and retest, thus completing the process.

As currently proposed, the CBO-sustainment overhaul affords the potential of cost savings over the method of overhaul being used by ANAD TVS today. By utilizing a tailored overhaul SOW that takes into account accumulated operating hours on components and the conditions under which the engine was run, the PM can avoid some costs by not replacing every part. The next step toward truly obtaining the goals of CBM in the overhaul is called Mature CBO.

3. Mature CBO

Mature CBO for the TIGER AGT1500 would be considered the pinnacle of technical development and analysis, as it would allow each engine to be overhauled "exactly" as needed. Based on the remaining useful life of parts as calculated by CBM sensors and algorithms to track real-time wear of the engine and its many components, a completely customized overhaul could be completed, ensuring durability upon completion. Mature CBO, like prognostic CBM, would require the addition of a number of sensors to further track changes in engine performance, temperature, pressure and vibration, thereby informing the operator of impending failure prior to actual malfunction. The engine would be required to collect, analyze and store information at a much greater frequency and capacity than currently supported. Furthermore, this level of CBM capability would potentially require ANAD

to reconsider the bay-style of work as an option for overhauling the engine. It is clear that this capability is still many years away from reality and certainly beyond the scope of analysis for this research. With many engines still undergoing a complete overhaul under CBO-sustainment, one-piece flow is still warranted.

F. Comparison of Processes

The standard overhaul process and the CBO process have advantages and disadvantages as they are used to overhaul the AGT1500. We must examine both of these processes, recalling the purpose for which each method was selected. The government seeks to obtain the best value for the costs of goods and services acquired—in this case, obtaining higher levels of MTBDR while reducing operations and support costs. Tables 3 and 4 demonstrate the advantages and disadvantages of both processes.

1. Standard Overhaul Advantages and Disadvantages

The standard overhaul process, in this case TIGER-sustainment, to be employed at ANAD TVS (see Table 3) is designed with predictability in mind, allowing ANAD to efficiently perform the complete overhaul for the TIGER AGT1500, in which mechanics completely disassemble and reassemble the engine with a majority of new parts. It is currently the preferred way to ensure the quality of the engine being produced due to the process's strict adherence to procedures and the introduction of new parts. This streamlined "lean" process is optimized to reduce bottlenecks and ensure that the annual demand of more than 1,000 engines is met every year.[14] It employs the eMOT system to ensure correct work is performed, thus reducing errors and variability in the process. It also employs *kanbans* to ensure parts are available at the exact time they are needed. By using the TRAP, the TVS facility increases the number of engines leaving the depot by quickly correcting problems, identifying the root-causes of failures and preventing first-pass success.

[14] This level of demand was required by the TIGER-reset program.

Parts-reclamation procedures under the current process also allow for savings by reutilizing parts that still have useable life. By continuing with its lean practices, the depot can maintain this award-winning operation for complete overhaul of the engine.

Table 3. TIGER-Sustainment Overhaul Advantages and Disadvantages

Advantages	Disadvantages
• Predictable process • Higher assurance of quality • Utilizes lean processes • Optimized for high volume of engines being overhauled • Employs eMOT system • TRAP improves quality by addressing process issues • Reclamation of parts	• Engine completely disassembled regardless of actual condition • Higher parts costs due to use of complete overhaul BOM • Higher labor costs due to complete overhaul

Since the cessation of the Direct Support Plus (DS+) program in 1995, the depot has completely overhauled all engines returned. This means that regardless of the remaining useful life of parts, ANAD either discards or reclaims these parts in accordance with DOF guidance. Without analyzing parts given EMU and HM data, many parts may still have useful life but instead are replaced to ensure durability but at a cost to the government. Although ANAD achieves an efficient process flow through a deliberate disassembly and assembly of the engine, some steps are performed that could be eliminated and that require more labor to overhaul the engine as compared to CBO.

2. CBO Advantages and Disadvantages

The CBO-sustainment phase has the potential advantage of providing cost savings through the use of a tailored, overhaul approach and by reducing the costs for parts by avoiding maintenance tasks that are not required. Labor costs can also be reduced through ANAD's use of a tailored overhaul SOW provided via the WPG,

eMOT and algorithms applied based on the engine's performance. This process also consists of data collection that is critical for analysis of engine performance and trending of failures in correlation to the amount of operating time on the engine. These data assist Honeywell in indentifying parts for durability improvement and in enhancing the WPG to reflect the right inspections to be performed at the correct time. ANAD and Honeywell did not previously collect these data on a routine basis, which has made it difficult to ascertain the actual performance of engines. The use of the WPG (and eventually WPG integrated-eMOT) helps guide the tailored overhaul of each engine based on its configuration of life-limited parts and accumulation of operating hours. These tools aid those at ANAD TVS to overhaul the engine more precisely and avoid unnecessary steps.

There are also a number of potential disadvantages. Due to the increased inspection time required to gather engine data and determine the proper level of disassembly and repair, more time may be required by highly skilled personnel to effectively accomplish this task. This delay can potentially produce a bottleneck at the depot, seriously impacting the flow of work through the TVS facility. Early estimates calculate that it may take a team of two to three analysts and technicians a dedicated 40 hours to complete the inspection of one engine. If demand were to increase significantly, then additional personnel would need to be added quickly; however, the specialized nature of analysis may make this need difficult to fulfill. Also, since each engine is overhauled to a different level, there is more variability in the process (when compared to the standard) that would also impact the flow of operations.

Table 4. CBO-sustainment Overhaul Advantages and Disadvantages

Advantages	Disadvantages
• Reduction in parts costs due to tailored overhaul SOW • Detailed analysis of actual engine condition during PSA and DA • Data collection for analysis, trending and algorithm development • Reduction in labor costs associated with disassembly and assembly • Use of WPG and eMOT to guide the tailored overhaul SOW to the exact steps required	• Increased inspection time during PSA and DA may form a bottleneck for the process, requiring additional personnel, equipment, and space to clear • Process flow affected by variability in level of work performed on each engine • Unproven • Unforeseen consequences

Another disadvantage of the CBO-sustainment overhaul is that the process is currently unproven. It is often easy to visualize success without foreseeing all of the potential challenges a new process like this can pose. Although Honeywell currently employs a CBO-like process on its commercial fleet of engines, nearly every aspect of the CBO process for the AGT1500 is still in development. Systems such as those required to analyze data, produce algorithms, and automatically create the tailored overhaul SOW have not yet been fully developed. There are many challenges yet to be faced by ANAD and Honeywell in implementing this process.

Additionally, up to this point, the only way to ensure durability has been for mechanics to completely overhaul the engine. CBO should theoretically meet durability goals based on the predicted life-limits of parts and inspection and repair of other aspects of the engine. There is, however, concern about whether or not partially overhauled engines can meet durability goals. Programs such as IROAN and DS+ have resulted in decreased durability, but with better inspection techniques and more highly skilled analysts at ANAD TVS, the program may avoid a similar reduction in durability.

G. Chapter Conclusion

The Condition-based Overhaul method of restoring the TIGER AGT1500 to a like-new condition by using new processes and technology has the potential to save the US Government a considerable amount of money. In this chapter, we have discussed the standard process currently used at ANAD TVS and the CBO process in detail. In the Data Presentation and Analysis chapters, we will demonstrate how a Monte Carlo simulation can be used to establish the average unit cost of an overhaul based on the WPG time bands and likely failure modes in each band. We will then look at investment costs associated with the change to CBO and develop a savings-to-investment ratio (SIR) for this change for the remaining life-span of the M1.

IV. Data Presentation

A. Introduction

In this chapter, the authors present the data pertaining to this cost-benefit analysis (CBA). We will explain recurring and non-recurring costs as they apply to anticipated changes required to implement Condition-based Overhaul (CBO). We will also discuss the benefits captured by the CBO process in the form of a reduction in required parts and labor when compared to the TIGER-sustainment overhaul status quo.

To determine these costs and benefits, the authors acquired data from a number of sources either directly or indirectly linked to the development of the CBO process. We received pertinent data from the Tank-automotive and Armaments Command (TACOM), the Program Manager (PM) for the Abrams, Honeywell International Inc., Anniston Army Depot (ANAD) Turbine Value Stream (TVS), the Operations and Support Management Information System (OSMIS), and the Department of Defense (DoD) Civilian Personnel Management Office. Over the course of this research, we exchanged numerous phone calls and e-mails with these organizations to gain the data necessary for this study.

These sources provided useful information critical to this research; however, there are a number of limitations to this research that have led all parties to make many educated assumptions. Because CBO is still in its infancy and many of the proposed changes have yet to be substantiated, the results of this study may prove to be vastly different from reality when it materializes. Regardless, we attempted to accurately quantify the costs of implementing CBO and the benefits through the use of average unit cost (AUC) of overhaul calculation with data provided by Honeywell.

B. Limitations

This research encountered a number of limitations. Timing proved to be a major limiting factor in the quality and amount of data received, because CBO is still a new concept being explored. Honeywell has performed condition-based maintenance on its commercial fleet of aviation turbine engines using a similar Work Planning Guide (WPG); however, the development of a WPG for the AGT1500 was only recently drafted and is currently untested. As a result, the cost and labor estimates are unproven. Additionally, whereas, the authors have taken a long-term view of the potential costs and benefits of the change to CBO, those organizations providing data could only provide estimates of the initial investments and anticipated costs for roughly the first five years. We were only able to address these investments and expenses; however, others may be incurred in the future that ANAD and Honeywell have not considered. Lastly, the Army is still introducing the TIGER engine in the field. As a result, there was little data to draw upon from engines currently being monitored in the field. Because this research is primarily focused on those failures that cause engines to be returned to the depot, and very few engines have failed, it was difficult to conduct analysis of failure data accurately.

C. Assumptions

As a result of these limitations, the researchers made a number of assumptions. Since CBO remains unproven, we assumed there would be no sacrifice to the durability of the engine due to the limited overhaul provided under CBO. We also assumed that CBO procedures would be sustained through the remainder of the M1's intended life. Finally, we assumed that engines would follow a uniform distribution in the time bands considered for CBO. We will test these assumptions through sensitivity analysis.

Additionally, the authors decided to use Honeywell's recommendation of conducting a complete sustainment overhaul at the higher-hour option versus TACOM's and ANAD's recommendation of the lower-hour option as the baseline

calculation for CBO. We made this decision due to Honeywell providing the majority of the data and we considered this to represent the best case for CBO. We address ANAD's recommendation for the CBO-sustainment overhaul at the lower-hour option as one of the alternatives in the analysis portion of this study.

D. Costs

Costs considered for this CBA are only those required to implement the CBO process at ANAD TVS. Many similar investments have already been made by the PM and are included in the original TIGER contract with Honeywell, so these CBO change costs are distinguished as "unique and additional" for this study. These investment costs are divided into non-recurring expenses (NRE) and recurring expenses (RE) that will accompany the TIGER program until FY2050. Additionally, either Honeywell or ANAD provided all investment costs and recurring expenses.

1. Non-recurring Expenses (NRE)

Non-recurring expenses (NRE) fall primarily into the two categories of additional equipment and process development. Investment costs that will not be repeated over the lifetime of the program are typically considered NREs.

a. Additional Equipment

(1) Video Bore Scopes. Bore scope devices with video and photo capability are required to assist analysts in analyzing the engine when it returns for CBO. These devices make it possible for analysts to look inside of the engine and inspect components that would otherwise only be visible if the engine were completely dismantled. Two of these devices will be purchased in FY10 to be used in the Pilot phase of CBO. ANAD estimated that each bore scope device costs approximately $65,000, totaling $130,000. An additional bore scope will be included with each added Disassembly Analysis bay; however, those costs will be discussed later in greater detail.

(2) Disassembly Analysis Bays (TRAP Bays). Disassembly Analysis bays are essentially identical to the TRAP bays currently used at ANAD today. As production of TIGER-reset engines is completed and more TIGER engines return to the depot for CBO, the process will likely require additional bays to handle the increased number of engines, as well as TRAP requirements for root-cause analysis. To determine the cost of additional bays, ANAD TVS provided the following estimate (see Table 5), with the assumption that floor space would be available in the existing facility to accommodate the additional bays.

Table 5. ANAD TVS Disassembly Analysis Bay Cost Estimate

Item	**Cost-in $K**
Computer workstation	2.7
Four post 2-ton bridge crane	30.0
Tools (basic, air and special)	20.0
Bore scope with video and photo capability	65.0
Miscellaneous	5.0
Total	152.7

Currently, ANAD TVS maintains four TRAP bays for its normal operation. When CBO is implemented there will be an increased demand for this bay space; however, the four additional bays may not be necessary until demand increases. To account for this possibility, we assume that two additional bays will be added in FY13 at the start of the CBO-sustainment phase and another two in FY16.

(3) Dynamometer Test Cell. ANAD anticipates that it is possible that one additional dynamometer test cell will be required to meet the needs of CBO. In FY09, five new test cells were constructed to meet the demand of the current process at a cost of $9 million. For our calculation we divided this figure by five—resulting in $1.8 million to add an additional test cell. Because this test cell will be added individually, and there may have been some cost savings due to the number

added before, we chose to round this amount to $2 million to more accurately reflect the cost of this additional equipment and facility. Allowing time for the CBO process to build, we did not consider adding this one additional test cell until FY16.

(4) Oil Flow Test Stands. Oil flow test stands are used at ANAD to test the flow of oil through various parts of the engine as a whole and in individual modules. ANAD estimates that one additional test stand could be used by all of the disassembly analysis bays. The acquisition cost of the test device is $72,000, which would be added in FY13. Annual maintenance costs for this machine will be included as a recurring expense.

b. Process Development

(1) Pre-pilot Phase Activities. The Pre-pilot phase of CBO involves the disassembly, inspection and evaluation of a single engine. Honeywell estimated that a similar scope for complete disassembly and inspection of a high-time engine within Honeywell facilities would cost approximately $100,000. ANAD TVS and Honeywell personnel will perform the Pre-pilot. The estimated labor required at ANAD to complete this effort would also be approximately $100,000. This amount reflects a six-month effort at the estimated ANAD hourly labor rate. For our calculations, we used a combined hourly labor rate—which includes both direct and indirect labor. We derived this estimate of hourly labor cost from a government cost estimate provided by TACOM (Hoffman, 2009). Additionally, the Honeywell estimates this portion of the support, analysis, and oversight of the effort conducted at ANAD TVS at $250,000—to fully support the planning, disassembly, disassembly eMOT process definition/mapping, and the generation of the disassembly eMOT. The total of this investment category is $450,000.

(2) Pilot Phase Activities. During the Pilot phase of CBO, ANAD and Honeywell will thoroughly inspect approximately 30 to 50 engines over a two-year period. For this research, we will consider the upper limit of 50 for calculation. Feedback from ANAD TVS suggests that these detailed inspections would be similar

to the 25-hour quality inspections already performed by TRAP analysts. These inspections take approximately 40 man-hours to complete with two analysts performing the inspections. Applying the estimated direct and indirect labor rate per man-hour brings the total to approximately $200,000 spread over FY11 and FY12.

Honeywell estimated an additional cost of $20,000 per engine, which covers the "structured" complete disassembly and evaluation of field-returned engines, and subsequent structured evaluation of parts during the reclaim process. This cost will be applied to the 50 engines proceeding through the Pilot phase. Honeywell also estimates an additional support cost of $100,000 to support this phase of CBO development. This investment cost totals
$1.3 million over FY11 and FY12.

(3) Work Planning Guide Establishment. Honeywell is currently in the process of composing the WPG to be used during the Pre-pilot and Pilot phase of CBO. As it gathers data during the Pre-pilot and Pilot phase activities, Honeywell will continue to review the WPG and finalize it for CBO-sustainment starting in FY13. The cost of this investment is spread between FY11 and FY12 at $125,000 per year, totaling $250,000.

(4) Data Interface Development. One of the critical components of the CBO process that will aid ANAD TVS in successfully performing CBO of the TIGER engine is the link between the engine's EMU and HM to the eMOT system. Honeywell will develop a data interface to take the engine's data and compare it to the tracked-part information in the eMOT and then automatically provide the tailored scope of work for each engine. This development will greatly enhance TVS's ability to quickly and correctly assess engines for overhaul. The cost of this investment is spread between FY11 and FY12 at $100,000 per year totaling $200,000.

2. Recurring Expenses (RE)

Recurring expenses (RE) fall into three categories: additional personnel, process updates, and additional facilities maintenance.

a. Additional Personnel

As CBO begins to take shape over the coming years, additional personnel will be required at ANAD TVS to perform the work. To accurately reflect the total cost of adding personnel, we applied a composite cost rate of 29% to the annual salaries (Belcher et al., 2006). We also assumed that the normal operation of the TVS facility will be maintained with the addition of the following personnel:

- One additional GS-12 would be added in FY10 to the current TRAP team to round out what would be considered a standard TRAP team for CBO. Each TRAP team will likely be composed of a GS-12 engineer and two GS-9 technical mechanics. Based on the 2009 General Schedule pay chart, a GS-12, step 5, earns approximately $100,000 per year with the composite rate added (fedjobs.com, 2009).

- One TRAP team would be added in FY11 to gain knowledge during the Pilot phase of CBO. GS-9 step 5's earn approximately $70,000 annually with the composite rate applied, based on the same pay chart. Two GS-9s would earn $140,000 and, including the GS-12 engineer, the total additional cost per TRAP team is then $240,000 per year (fedjobs.com, 2009).

- Two additional TRAP teams would be added at the beginning of the CBO-sustainment phase in FY13 to account for the increase in engines expected to be overhauled during CBO-sustainment, for a total additional cost of $480,000.

- Four additional TRAP teams would be added in FY16 to account for the constant demand placed on the ANAD TVS for the remainder of the program until 2050. The annual cost of the six TRAP teams would be $1.44 million per year.

- Lastly, two WG-11 dynamometer test cell technicians would be added in FY16 to accompany the additional test cell. WG-11s earn an estimated annual composite salary of $61,000 (DoD Civilian Personnel Management Service, 2009). Thus the total investment is $122,000 per year.

b. Process Updates

(1) WPG Updates. Honeywell estimates that approximately $50,000 annually will be required to maintain the WPG once a robust baseline has been established and once lessons learned from the CBO-sustainment phase are incorporated.

(2) eMOT Updates. Honeywell also estimates that an additional $50,000 per year would be required to account for the incorporation of lessons learned from the CBO-sustainment phase being incorporated back into the eMOT system.

c. Additional Facilities Maintenance

As a result of the additional Disassembly Analysis (DA)/TRAP bays and dynamometer test cell there will likely be additional recurring costs due to operations, maintenance and upgrade of those facilities. The additional facilities will add to the amount of overhead in the form of utilities and tools, and equipment will require calibration, inspection and maintenance to ensure it is operating properly over the life of this program. When all assets are in place, this recurring cost is estimated to be $77,500 per year in additional overhead.

(1) Disassembly Analysis Bays/TRAP Bays. For this research, we considered adding four additional DA/TRAP bays. Due to the added equipment of each bay, ANAD will incur additional maintenance and calibration costs. ANAD estimates that the annual recurring expense associated with each bay would be approximately $6,250. The recurring expense for these would be added two at a time—two in FY13 and another two in FY16. When all four are operational, the added annual recurring cost will be approximately $25,000.

(2) Dynamometer Test Cell. With the addition of a dynamometer test cell comes the additional expense of maintenance, calibration and utilities. The test cell is a complex piece of machinery that involves routine maintenance and calibration to ensure proper performance and accurate readings for gauging each engine's

performance. ANAD estimated the routine and corrective maintenance at $30,000 per year, with annual calibrations amounting to another $6,500. ANAD estimated that each dynamometer test cell incurs an annual utility expense of $15,000. To account for this additional recurring expense ANAD estimated that an additional $51,500 would be required in FY16.

(3) Oil Flow Test Stands. ANAD also estimated the additional maintenance associated with the oil flow test stand is estimated to be $10,000 annually beginning in FY13. This cost includes oil, filters, maintenance, and calibration twice per year.

E. Benefits

Typically, benefits associated with CBA are discussed as being either quantifiable or non-quantifiable. Quantifiable benefits are "benefits that can be assigned a numeric value, such as dollars, physical count of tangible items, or percentage change" (US Army Cost and Economic Analysis Center, 2001). Non-quantifiable benefits generally refer to those benefits that do not lend themselves to direct, quantitative measures, such as improved operational availability and confidence in the overhaul process. For this research, the authors chose only to address the quantifiable benefit of cost savings gained by changing to the CBO process. We will only briefly address non-quantifiable benefits associated with this change.

1. Quantifiable Benefit (Cost savings due to CBO)

The most significant benefit afforded by the change to CBO is the cost savings associated with the reduction in parts and labor due to WPG-directed maintenance, which is based on life-limits and accumulated usage. This maintenance negates the requirement for total overhaul except under high operating-hour conditions. We can calculate cost savings when we compare this data to the status quo of a TIGER-sustainment overhaul. We will represent these savings in the data analysis chapter under savings-to-investment ratio (SIR).

a. Average Unit Cost Explained

The average unit cost (AUC) of the overhaul is expressed as the average cost of all parts, labor, and overhead that is chargeable and represented to the PM as a single cost per engine. AUC includes all costs from induction through final testing and acceptance of the engine. This applies to both the TIGER-sustainment (status quo) overhaul and the CBO process.

b. CBO Average Unit Cost Calculation

In order to calculate the AUC of the CBO-sustainment overhaul, we required the following data. We then applied these data to a Monte Carlo simulation to determine the AUC for the CBO engine. These requirements and sources are listed in Table 6.

Table 6. Average Unit Cost Calculation Data Requirements

Data Requirement	Use for AUC Calculation	Source
TIGER-sustainment overhaul cost (WPG level 5)	Baseline for comparison and applicable to high-hour engines. This includes the BOM costs, labor, and overhead.	Honeywell ANAD TACOM
Work Planning Guide (WPG) level time band costs	The costs of parts and labor for each WPG-level of work performed and applied to the AUC model.	Honeywell ANAD
Probability of engines returning in each time band	Determines number of engines expected in each time band for simulation based on random numbers between 0 and 1.	Honeywell
Failure categories, probabilities and costs	Anticipated failures add to the cost of overhauling the engine.	Honeywell
Other tasks (PSA, DA, Dyno testing) not specifically mentioned in WPG but required	Additional tasks add to the cost of overhauling the engine.	Honeywell ANAD

(1) Tiger-sustainment Overhaul Cost (WPG Level 5). The TIGER-sustainment overhaul is the most costly of the overhaul options and essentially constitutes a complete overhaul of the engine. The cost of the TIGER-sustainment BOM, labor and overhead is approximately $260,000 (Hoffman, 2009).[15] For a TIGER-sustainment overhaul, the engine will follow the standard process, being completely disassembled in accordance with the eMOT and NMWR, with the additional steps of Pre-shop Analysis and Disassembly Analysis. Part inspection and reclamation will also proceed as normal. This figure is different from the status-quo TIGER-sustainment AUC of $255,800, because only the total sustainment cost of the overhaul is applied in WPG-level 5. The WPG-level 5 costs reflect the total sustainment cost of overhaul, whereas the TIGER-sustainment AUC also accounts for the cost-savings gained from engines with less than 100 hours of operating time.

(2) Work-Planning Guide Level Costs and Probabilities. For this research, we utilized the draft version of Honeywell's proposed WPG—composed of five levels of differing bands of time, each with an associated cost and probability of engine inclusion. This proposal is illustrated in Table 7. Honeywell provided parts costs based on the TIGER program year-three BOM costs which may differ slightly from the current BOM costs. We calculated labor costs applying Honeywell's estimate of labor hours required for each WPG task and then applying the estimated ANAD hourly labor rate.

[15] This is the calculated TIGER-sustainment engine cost.

Table 7. Work Planning Guide Level Costs

WPG Level	Time Band in Hours	BOM cost in $K	Labor and overhead cost in $K	Total Cost in $K	Cumulative WPG Cost in $K	Probability %
1	0 – 100	*	*	*	*	*
2	*	*	*	*	*	*
3	*	*	*	*	*	*
4	*	*	*	*	*	*
5	*	*	*	*	-	*

* This table contains proprietary information and has been sanitized.

Based on engineering analysis and life-limits of parts, TRAP analysts perform a specific set of tasks on the engine given the number of hours accumulated as registered on the engines hour meter and tracked in the eMOT. Analysts then apply the hours registered by the hour meter to the each of the life-limited components and deducted from its remaining useful life. By accomplishing this level of work, the engine should be capable of enough operating time to attain an MTBDR of 1,400 hours of operation prior to returning to the depot. The reader should note that labor hours represented under the Failure Cause Drivers in Table 8, do not include all of the labor required to restore components to a new condition. The hours represented are those required to inspect, replace and repair those faults identified. That additional labor by ANAD to completely disassemble and repair these components would be required, however, was not considered in this calculation. Further research, which will yield a more accurate cost of overhaul, should be conducted to quantify these costs. Appendix B presents the various draft-WPG-level tasks recommended by Honeywell and considered during this research. At each WPG level, analysts disassemble the engine as required to gain access to the portion of the engine that requires inspection. As analysts inspect the engine, components are either approved to meet another 1,400 hours or replaced due to their being out of

tolerance or showing signs of wear that may preclude another 1,400 hours. The analysts will then inspect engines falling into higher WPG levels for all previous WPG levels, the parts and labor costs added cumulatively.

Honeywell provided the probabilities for engines falling into each WPG level. Honeywell used a uniform distribution with a range from zero to 2,000 hours based on a mature fleet for its commercial gas turbine engines. Since there is currently a lack of historical data for the TIGER engine, this analogous comparison, although not realistic to the military ground-operating environment, must suffice for this study. Sensitivity analysis will be performed later to address the impacts if reality reveals another distribution of engines falling into the WPG-time bands. Future research on this topic should address the probabilities achieved by actual TIGER AGT1500 failure data. Additionally, Honeywell did not provide the research team with the exact figures used to arrive at these percentages.

(3) Reason-for-return (RFR) Categories, Costs and Probabilities.

In addition to WPG-level requirements, engines will also require repair work to address the failures responsible for the engine's return to the depot. As discussed in Chapter II, TIGER field service engineers are able to perform 14 depot-avoiding maintenance tasks above what unit-level maintainers are authorized. These tasks help to increase MTBDR. There are occasions, however, when the failure incurred requires the engine to be returned to the depot.

To address this possibility in our research, we asked Honeywell to determine the leading causes for depot return that would fall into each of the WPG levels. In response, it provided five leading failure-cause drivers (reasons for failure) and an additional five categories that should encompass the remaining reasons for return (see Table 8).

Failure-cause drivers were broken into five categories: no start, high oil consumption (HOC) and smoke, low power, foreign-object damage (FOD), and unscheduled shutdown. Honeywell analyzed its Fact-based Maintenance database to cluster likely failure drivers into these five categories. To address the remaining causes of failure, Honeywell took the remaining failures and applied them to each of the modules of the engine, including to the full engine. This is to say that the failure incurred in these conditions would require the complete replacement of that module, or at least significant rebuild. Honeywell provided the costs in Table 8 to address the average BOM and labor costs of these repair scopes. Because many possible failure modes were represented in each category of failure, the resulting cost of hardware is the average. For this analysis, we did not consider the possibility that more than one of the failure cause drivers or other repair scopes was being applied to the same engine. These figures play a significant role in the calculation of the CBO AUC.

Table 8. Failure-Cause Drivers/Other Repair Scopes, Costs and Probabilities

Reason-for-return	Probability of Failure Cause Drivers (%)					Probability of Other Repair Scopes (%)				
	No Start	HOC and Smoke	Low Power	Foreign Object Damage	Unsched. Shutdown	Full Engine	Forward	Rear	AGB	RGB
WPG Level	[redacted]									
1	*	*	*	*	*	*	*	*	*	*
2	*	*	*	*	*	*	*	*	-	-
3	*	*	*	*	*	*	*	*	-	-
4	*	*	*	*	*	*	*	*	-	-
5	-	-	-	-	-	100%	-	-	-	-
[redacted]										
Average Hardware Cost per Driver in $K	*	*	*	*	*	*	*	*	*	*
Average Labor Cost per Driver at $* per hour in $K	* **	* **	* **	* **	* **	*	*	*	*	*
Total Cost per Driver	*	*	*	*	*	*	*	*	*	*

** Labor hour estimates for failure cause drivers provided by Honeywell.

* This table contains proprietary information and has been sanitized.

(4) Run-as-received (RAR) Candidate Probability.

Based on discussions with Honeywell and ANAD, the researchers expect that there will be a small percentage of engines that will return to the depot and be considered “run-as-received” (RAR) candidates. Honeywell estimated this category to be less than 10%, while ANAD stated that only 3% of engines fall into this category. For this research, we assumed that approximately 5% of engines were returned in this manner when there is either no evidence of failure (NEOF) or only minimal damage. Prior to PSA and DA, analysts place these engines in the dynamometer test cell and test them for horsepower. If these engines achieve the required horsepower, analysts inspect the engine in accordance with the WPG and reintroduce it to the supply system after acceptance testing. Table 9 specifies the probability of RAR engines falling into each WPG level. From the probabilities that Honeywell has provided, we calculated the new probabilities for RAR engines in each time band. RAR engines theoretically can be overhauled and brought to the 1,400-hour standard for lower cost because the engine has not sustained a failure.

Table 9. Run-as-received Candidate WPG-Level Probability

WPG Level	Time Band	Probability % Pr(WPG-level|RAR)	Conditional Probability % Pr(RAR|WPG-level)
1	0 – 100	*	65.0
2	*	*	0.09
3	*	*	0.05
4	*	*	0.02
5	*	*	0.0

* This table contains proprietary information and has been sanitized.

(5) Pre-shop Analysis, Disassembly Analysis and Dynamometer Test Cell Costs. In addition to WPG-level requirements and reason-for-return maintenance, all engines will go through Pre-shop Analysis (PSA), Disassembly Analysis (DA) and

the dynamometer test cell for acceptance testing. PSA and DA—each explained in detail in Chapter III—incur an additional expense to the process that varies with each engine based on its state of return (e.g., operating hours, failures). For our analysis, we considered the range of time that these analytical procedures would take, along with the associated cost. Table 10 illustrates these figures. Each engine will also go through acceptance testing in the dynamometer test cell. ANAD estimated the cost of this cell to range between $2,500 and $3,000 for each time the engine is tested depending on variability of each engine. This cost includes the setup, operation, and analysis of data for each engine. Test costs for WPG-level 5 are included in the overall cost of the engine in both the status quo and CBO process.

Table 10. Pre-shop Analysis, Disassembly Analysis Cost Breakdown

WPG Level	Time Band	PSA Cost	DA Hours Required	DA Cost in $K	Test Cost in $K
1	0 – 100	2, 3 or 4 hours with a discrete uniform distribution multiplied by $* (ANAD labor rate)	8-16	*	Cost uniformly distributed from 2.5 to 3.0
2	*		17-24	*	
3	*		25-32	*	
4	*		33-40	*	
5	*		40	*	-

* This table contains proprietary information and has been sanitized.

c. TIGER-sustainment Status Quo Average Unit Cost

The status quo AUC is the anticipated cost of maintaining the current overhaul process at ANAD TVS with the TIGER-sustainment bill of material and estimated labor costs. This cost is estimated to be approximately $260,000 per engine. We determined this amount by using the provided hardware cost figures from Honeywell for the entire engine and then by applying the estimated labor of the

current overhaul process (Hoffman, 2009). Under the TIGER-sustainment overhaul, only the WPG-level 1 and TRAP candidates would apply to ensure that another 1,400 hours MTBDR would be assured for engines returning with less than 100 hours. We took this assurance into account when calculating the AUC for the TIGER-sustainment overhaul. To account for this cost savings in the status quo AUC, we used a decision-tree analysis to gain the expected monetary value of these low-time engines. Tables 11 and 12 present the data used to calculate the status quo AUC.

Table 11. Status Quo AUC Decision Tree Payoffs

			Reason-for-return Maintenance Cost in $K	WPG Cost in $K	PSA Cost in $K	DA Cost in $K	Test Cost in $K	Total Cost in $K
< 100 Hours	Failure Cause Drivers	No Start	*	*	*	*	*	*
		HOC/Smoke	*	*	*	*	*	*
		Low Power	*	*	*	*	*	*
		FOD	*	*	*	*	*	*
		Unscheduled Shutdown	*	*	*	*	*	*
	Other Repair Scopes	Full Engine	*	*	*	*	*	*
		Forward	*	*	*	*	*	*
		Rear	*	*	*	*	*	*
		AGB	*	*	*	*	*	*
		RGB	*	*	*	*	*	*
>100 Hours								260.0

* This table contains proprietary information and has been sanitized.

Table 12. Status Quo AUC Decision Tree Probabilities

Engine Hours	Probability of Engine Hours (%)		Probability of Categories (%)	Repair Scopes	Probability (%)
< 100 Hours	5	Top 5 Cause Driver	*	No start	*
				HOC/Smoke	*
				Low Power	*
				FOD	*
				Unsch SD	*
		Other Repair Scope	*	Full ENG	*
				Fwd	*
				Rear	*
				AGB	*
				RGB	*
> 100 Hours	95				

* This table contains proprietary information and has been sanitized.

2. Non-Quantifiable Benefits

In the course of our research, we identified a number of possible non-quantifiable benefits for this CBA, such as improved operational availability, progress toward the Army's goal of Condition-based Maintenance (CBM), and confidence in the overhaul process. The Army's *Economic Analysis Manual* states that attempts to address non-quantifiable benefits must be done so qualitatively (U.S. Army, 2001).

To address operational availability, ANAD could potentially improve it by this course of action because the CBO process will possibly decrease the flow time of the entire overhaul process by avoiding the total overhauling of TIGER engines. The

impact of improved flow time on operational availability is negligible because of the number of spare engines in the field and the number of tasks that Field Service Engineers can perform. These factors can significantly decrease the time the M1 is non-mission capable. The other possible non-quantifiable benefits are difficult or impossible to enumerate. Therefore, this research does not address these benefits beyond their mention here.

F. Chapter Conclusion

In this chapter, we provided the elements of data required to calculate the AUC for the TIGER-sustainment overhaul and the CBO processes. We also addressed those investment costs pertinent to establishing CBO at ANAD and other recurring expenses. Based on these data, we conducted our analysis, resulting in the AUC of CBO engines and SIR for the change to CBO.

THIS PAGE INTENTIONALLY LEFT BLANK

V. Data Analysis

A. Introduction

In this chapter, the authors provide the rationale and logic used to determine the savings-to-investment ratio (SIR) for implementing the Condition-based Overhaul (CBO) process at the Anniston Army Depot (ANAD) Turbine Value Stream (TVS) facility. To determine the SIR, the authors applied the data presented in Chapter IV to a decision tree analysis model and Monte Carlo simulation to establish the average unit cost (AUC) for engines following the standard process and for those overhauled under CBO. We then compared these AUC figures with the investment costs related to the transition to CBO, resulting in the SIR with present value (PV) calculation. To address the tentative nature of this research, the authors performed sensitivity analysis for both alternatives, being the lower- and higher-hour CBO-sustainment overhaul decision points. We conducted this analysis by manipulating a number of variables that are potentially subject to change in the future. In doing so, we were able to demonstrate some of the possible effects to the overall SIR in light of the many unknowns that lie ahead in the future of this untested process.

B. Methodology

In order to determine the SIR for the change to the CBO process, the researchers required two primary analytical steps to ascertain the AUC for engines overhauled under both the standard and CBO methods. For calculating AUC for both methods, probabilities are involved. Decision-makers operate under typically three decision-making environments: certainty, uncertainty, and risk. Decision-making under risk is defined as when “decision-makers have some knowledge regarding the probability of occurrence of each outcome” (Balakrishnan, Render, & Stair, 2007, p. 359). Since the probability of various events (i.e., probabilities of engines in each time band, failure-cause drivers and other repair scopes, and run-as-received (RAR) candidates) could be determined in the course of this research, decision-making under risk most closely applies.

One of the most common methods for making decisions under risk is based on the expected monetary value (EMV) of each alternative. EMV is the "weighted average of all possible payoffs for that alternative, where the weights are the probabilities of the different outcomes" (Balakrishnan et al., 2007, p. 365). The authors used a decision-tree model to aid in calculation of the EMV of the standard overhaul process AUC given the probability of RAR candidates.

To calculate the AUC for the CBO process, we used a Monte Carlo simulation. The number of variables affecting the AUC were many; however, more importantly, this process demonstrated the characteristics of a "dynamic system" based on feedback among variables. In a dynamic system, it is difficult to calculate the outcome mathematically, so it is usually simulated (Clark, 1988). The feedback from considering the AUC of CBO occurs when an engine returns with a certain number of operating hours. Because there is a lack of historical data to support this research, Honeywell provided the probability of an engine having a certain number of engine hours. This probability, when applied to the model, yielded a random number of operating hours, which placed it into one of the five WPG-time bands. Once this engine is overhauled, the model randomly assigns another value for operating hours—which, based on the cumulative nature of usage for life-limited parts, would place it into another WPG-time band. Stated in simpler terms, what happens in the first sequence affects the outcome of the following sequence, and so on. Due to this feedback, the Monte Carlo simulation offered the researchers a suitable method for simulating the lifecycle of the fleet of TIGER engines for the period under consideration.

We could have used many quantitative methods to represent the possible savings achieved through CBO. Benefit-cost ratio, break-even point analysis, net present value, rate of return, and savings-to-investment ratio are commonly used to demonstrate savings and cost avoidance achieved. For this research, we decided to use savings-to-investment ratio (SIR) since the research addressed savings, as opposed to cost avoidance. The Army's *Economic Analysis Manual* defines cost

savings as, “savings results in the reduction of an approved Army program” (US Army Cost and Economic Analysis Center, 2001, p. 27). It also describes savings as, “A cost reduction which will be made in a specific Management Decision Package resulting from implementing a specific alternative that does not degrade current capability, in lieu of continuing the present system” (p. 153). As we see, the CBO process falls into this category as opposed to one of cost avoidance, which addresses reductions in future resource requirements of a program since some future investment will not be made for that alternative.

1. Decision-tree Analysis (Status Quo Average Unit Cost (AUC) Expected Value)

a. General Case

A decision tree is a tool that uses a branched graph or model of decisions and their possible consequences. The model includes chance-event outcomes and resource costs. Decision trees consist of nodes and arcs that delineate possible outcomes and are commonly used to help identify a strategy most likely to reach a goal when many factors are present. Two types of nodes are used: decision and outcome (Balakrishnan et al., 2007, p. 370). In this research, we utilized only the outcome nodes to more easily determine the expected monetary value of the status quo overhaul.

b. Composition of Model

(1) Inputs. As Balakrishnan et al. (2007) describe, at each outcome node the expected payoff is computed using the probabilities of all possible outcomes at that node and the payoffs associated with those outcomes (2007, p. 370). In this case, we consider the “payoffs” the costs associated with the corrective maintenance, WPG-level inspections and replacements, Pre-shop Analysis (PSA), Disassembly Analysis (DA) and dynamometer test cell costs. These data are illustrated in Table 10 in Chapter IV.

We also considered the probabilities of these outcomes represented in Table 12 in Chapter IV. These probabilities applied to the payoffs in Table 11 yielding the expected monetary value (EMV) of the status quo TIGER-sustainment AUC. When using the decision tree to calculate the EMV, we accounted for overlapping of costs encountered due to the replacement of entire modules (as represented in the Other Repair Scopes category), resulting in the accurate representation of EMV.

(2) Output. The expected monetary value for the status quo TIGER-sustainment AUC is $255,851. We will apply this AUC in the SIR calculation, comparing the CBO AUC to this status quo AUC to quantify the savings. Figure 11 illustrates the decision tree we used to arrive at this figure.

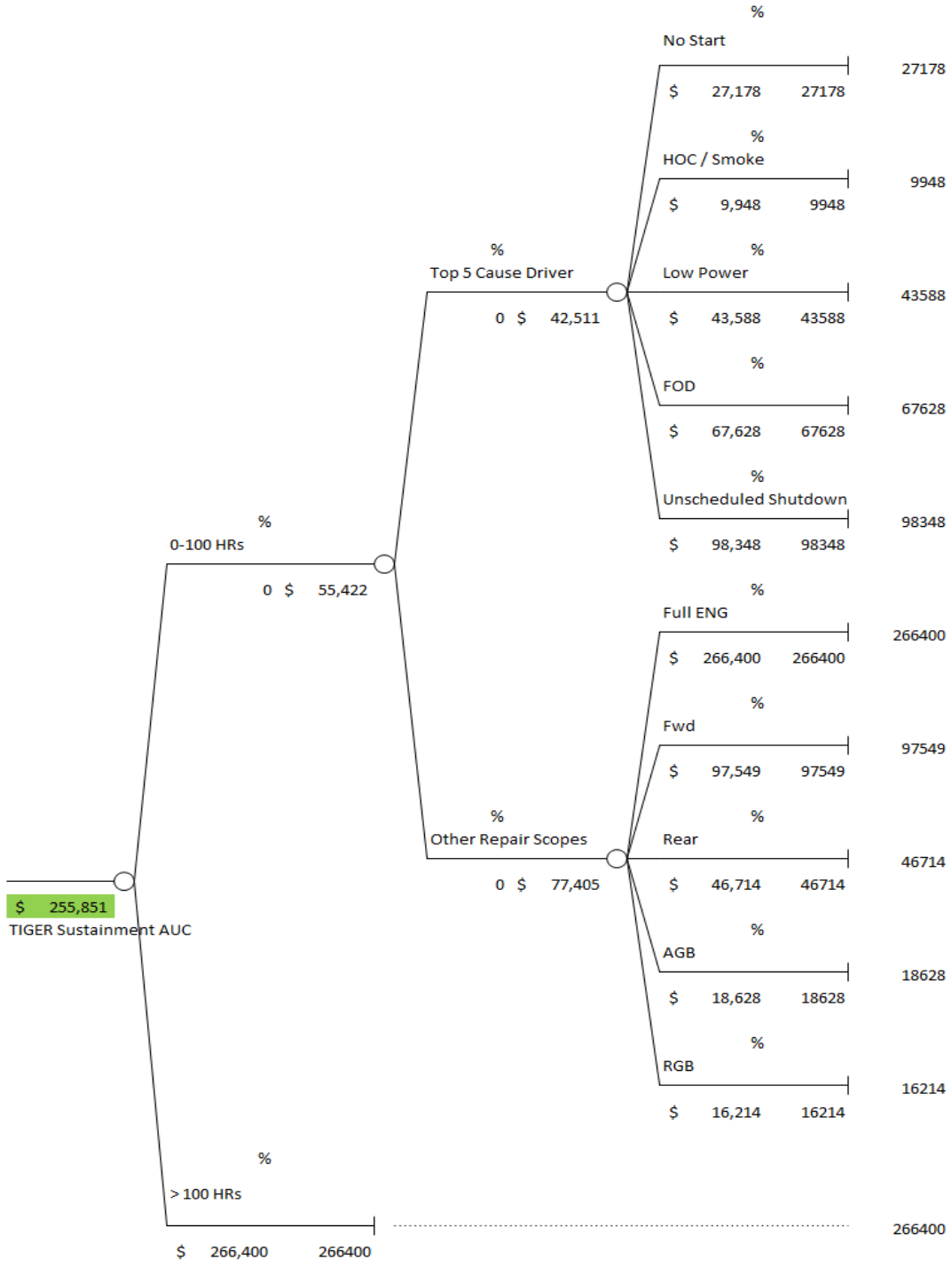

Figure 11. Status Quo AUC Decision Tree

2. Monte Carlo Simulation (CBO AUC Calculation)

a. General Case

As previously indicated, simulation was required based on the feedback of variables bearing on the calculation of the AUC of the CBO process. Because this problem contains many elements of risk, we can apply Monte Carlo simulation. The premise behind Monte Carlo simulation is to "randomly generate values for the unknown elements (i.e., variables) in the model through random sampling" (Balakrishnan et al., 2007, p. 457). In this case, we created a Monte Carlo simulation using Microsoft Excel. Balakrishnan et al. (2007) indicate there are essentially three steps in a Monte Carlo simulation:

- Establish a probability distribution for each variable in the model that is subject to chance.
- Use random numbers, simulate values from the probability distribution for each variable in the first step.
- Repeat the process for a series of *replications* (also called *runs*, or *trials*) (p. 457).

We followed these steps in the determination of the CBO AUC.

b. Composition of Model

The Monte Carlo simulation model we used to determine the AUC for the CBO process was developed to take into account a number of factors bearing on the final AUC. The Excel spreadsheet represents the AUC of CBO for one engine's life until fiscal 2050. 3,500 trials were conducted to represent the entire fleet of TIGER engines and establish a 95% confidence interval in the data to ensure the number of trials was sufficient. Appendix D presents a detailed breakdown of the number of engines in the fleet. These 3,500 trials, when averaged together yield the AUC for the CBO process. To establish the AUC, it was realistic for us to consider the number of times an engine would return to the depot until fiscal year 2050. Assuming there would be some variability, we used ten overhaul sequences to cover

the majority of situations. For each sequence, we randomly applied engine operating hours using a uniform distribution with a range of zero to 2,000.

Figure 12 presents the graphical representation of the Monte Carlo simulation used. We applied inputs in the form of controlled and uncontrolled (random) factors to the model, which resulted in a number of outputs in the form of costs.

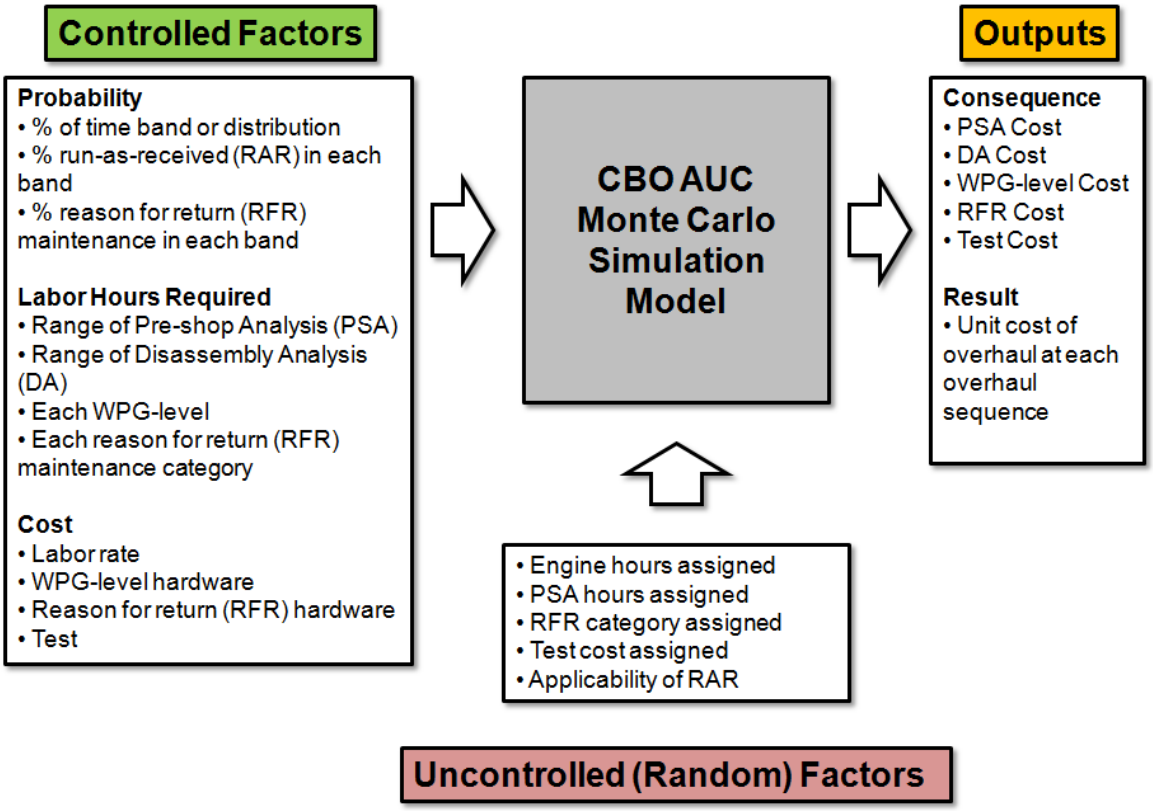

Figure 12. Monte Carlo Simulation Model Black Box Representation

We used an influence diagram to represent to the reader the relationships among inputs, random variables, and their outputs in this simulation model. This information is provided in Figure 13. We will now discuss these relationships and how the model generates the cost for each overhaul sequence.

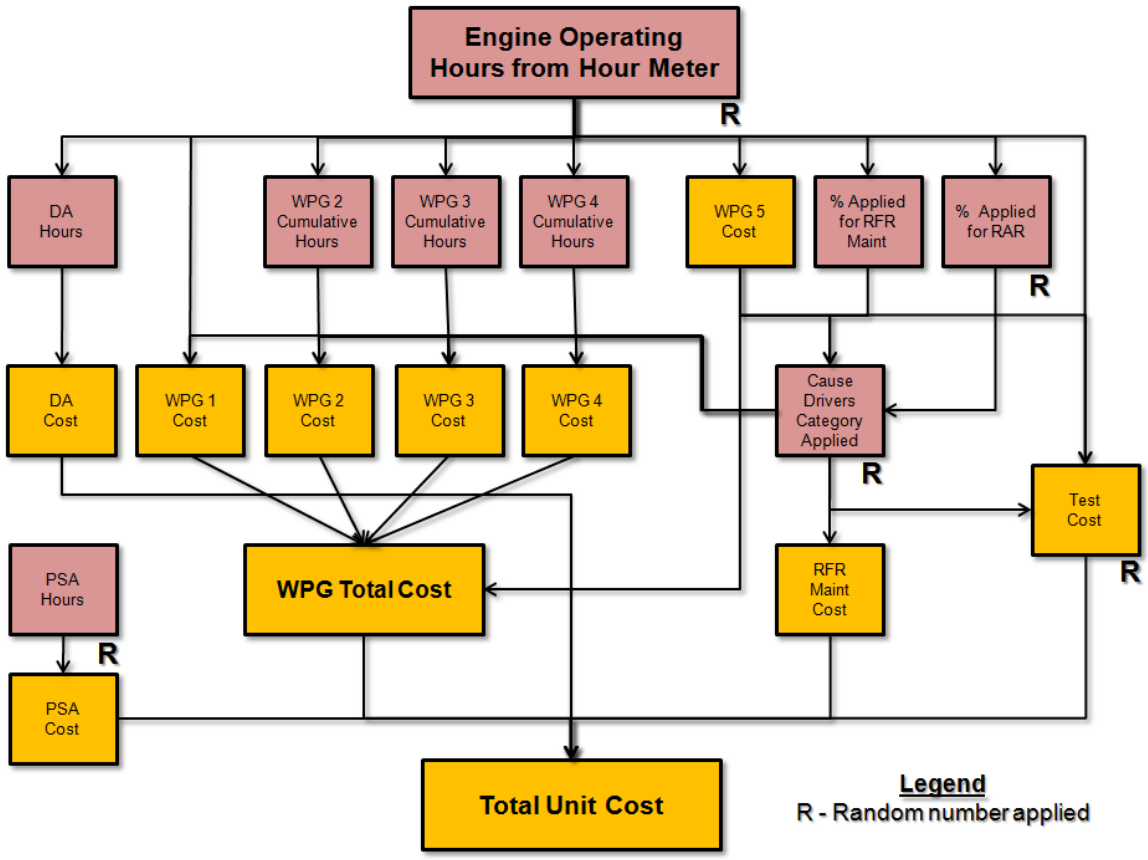

Figure 13. Monte Carlo Simulation Influence Diagram

(1) Engine Operating Hours from Hour Meter. We used random numbers to simulate the hours represented on each engine's hour meter. We then added these operating hours to the cumulative hours of the life-limited components tracked by eMOTs, which direct the level of WPG maintenance performed by analysts. Engine operating hours directly apply to WPG-levels 1 through 5; however, the cumulative operating hours for each overhaul sequence also apply to WPG-levels 2 through 4. Engine operating hours also influence the outcomes of other aspects of the model, such as the number of disassembly analysis (DA) hours, probability applied for reason-for-return (RFR) maintenance, probability applied for run-as-received (RAR) engines, and test costs applied. As previously mentioned, we applied random numbers using a uniform distribution with a range of zero to 2,000.

(2) Pre-Shop Analysis and Disassembly Analysis. The model addresses PSA and DA costs in two ways. Pre-shop Analysis uses a random number ranging from a discrete uniform distribution of two through four to dictate the number of hours required to perform this task. Disassembly analysis, on the other hand, is determined by the engine's operating hours. Based on the random number generated for engine operating hours, the DA hour interval is determined in correlation to the time band in which it falls. This random number also follows a discrete uniform distribution in each interval. For instance, the time band 1 interval is from 8 to 16. If the engine hours are indicated to be in time band 1, then a random integer between 8 and 16 is applied. In the cases of both PSA and DA, whatever number of hours in determined is multiplied by the ANAD hourly labor rate to generate the cost. Engines falling into WPG-level 5 will also receive PSA and DA. This analysis, however, is not intended to direct the overhaul effort but to gain data on the condition of life-limited and other parts.

(3) WPG-Level Cumulative Hours and Costs. In the model, the cumulative hours direct the level of maintenance performed, except in the case of WPG-levels 1 and 5. For instance, if the hour meter reads 270 operating hours, WPG-level 3 maintenance is directed and performed incurring the associated cost of parts and labor. Once this work is performed for those components, cumulative hours for WPG-levels 2 and 3 are reset to zero. However, they remain for WPG-level 4. Thus, if the engine returns again with another 250 cumulative hours, this time the WPG-level 4 maintenance is directed. We should note that there are no cumulative hours applied to WPG-level 1, since every engine (except WPG-level 5) receives this level of inspection and maintenance. WPG-level 5 engines are completely overhauled, avoiding the other WPG-level tasks. The cost of parts and labor is incurred based on the WPG-level of maintenance directed. We should also note that in reality, operating hour accumulation is assigned to engine components, not the engine as a whole.

At times, the RFR maintenance—which pertains to likely failure modes and other repair scopes—will direct that a module be completely overhauled. The WPG is not only based on time intervals but also on the modules in which inspections will occur. In the case that a module is directed for complete overhaul, the WPG-level maintenance cost for that module will not be applied; only the other modules WPG-level costs apply. Once all WPG-level costs and failure-cause-driver effects are applied, the WPG total cost is determined.

(4) Run-as-received Engines and Reason-for-return Maintenance. Each time band has a different probability for RFR maintenance and RAR engines, and the probability is applied based on the operating hours from the hour meter (represented in Table 9). If the random number generated for the RAR engine is less than the probability indicated by the associated time band based on engine operating hours, then it is considered an RAR engine, and no RFR maintenance costs will be considered. Only those costs associated with the WPG-level are included.

If the random number is greater than the assigned probability, then another random number is sampled to determine the category of failure-cause-driver or other repair scope. The associated costs for parts and labor is applied for RFR maintenance based on the category determined. If the engine falls into WPG-level 5 or the “full engine” category under other repair scopes, the engine will be completely overhauled, and WPG-level and RFR maintenance costs will not be considered. The total cost of the engine is applied to that overhaul sequence.

(5) Test Costs. Similar to PSA costs, the model calculates dynamometer test costs using a random number with a discrete uniform distribution of integers between $2,500 and $3,000. Except in the cases of WPG-level 5 and full engine overhaul—as indicated by other repair scopeswhere test costs are already factored into the total cost—the test cost is applied. In the case of a RAR engine, this cost is doubled because the engine is tested in the PSA phase.

(6) Total Unit Cost Calculation and Application. The total unit cost is the sum of costs for engine induction, PSA, DA, WPG total, RFR maintenance, test, and final processing costs. Engine induction and final processing costs are relatively small and are considered to be part of the WPG-level cost at each level. The total unit cost is the cost charged to the PM per engine for each overhaul sequence. The model then averages the ten overhaul sequences, which equal the AUC for that engine, or trial.

As indicated previously, we conducted 3,500 trials using the data table feature in Excel. The average of these trials represents the average unit cost of CBO. From these 3,500 trials, we were able to achieve a 95% confidence interval half-width of $1,000, which was acceptable for this research. Based on this model the average unit cost for the baseline alternative of 1000-hours of the CBO process is $182,999, with a minimum of $83,742 and maximum of $270,036 recorded. The descriptive statistics for both the higher-hour and lower-hour alternatives based on these trials are represented in Table 13. The mean is used in the calculation of the SIR.

Table 13. Descriptive Statistics for Average Unit Cost Calculation

Statistical Measure	Values (higher-hour Alternative)	Values (lower-hour Alternative)	Difference
Mean	$182,999	$213,518	$30,513
Standard Error	$522	$472	
Median	$183,427	$216,710	
Standard Deviation	$30,853	$27,918	
Range	$186,294	$164,700	
Minimum	$83,742	$98,579	
Maximum	$270,036	$263,279	
Sum	$640,495,922	$747,312,173	
Count	3,500	3,500	
Confidence Level (95%)	$1,022	$925	

3. Savings-to-investment Ratios with Present Value Calculations

a. General Case

Savings-to-investment ratio (SIR) is one of many ways we can quantitatively represent the costs and benefits of a given program. The *Army Economic Analysis Manual* defines SIR as follows:

> The SIR is used to compare investment costs to savings to determine if the investment costs can be recovered through savings. The SIR is determined by comparing the present value (PV) of cost savings over the lifetime of a project to the PV of investments minus the PV of investment terminal value (if any) necessary to generate those savings. An SIR greater than 1.0 indicates that the investment is cost effective. (US Army Cost and Economic Analysis Center, 2001, p. 127)

(1) Savings-to-Investment Ratio (SIR)

The formula used to calculate the SIR is as follows:

$$\text{SIR} = \frac{\text{PV(Savings)}}{\text{PV(Investment) - PV(Terminal Value)}}$$

In this case, the PV of savings is the status quo AUC minus the CBO AUC, multiplied by the number of engines overhauled per year (300). The savings per each overhaul sequence of an engine is depicted in Table 14. We also show the potential per engine savings achieved through labor avoidance when compared to the TIGER-sustainment overhaul. Appendix E presents a detailed account of how the number of engines of 300 was selected. This number is also multiplied by a degradation factor, which was established by TACOM when the original return on investment was calculated for the TIGER program. This factor represents the additional cost of overhauling the engine after subsequent overhauls are completed. TACOM used a degradation factor of 1.0146 compounded annually. For

consistency, we chose to include this number, although Honeywell claims that CBO engine degradation would be minimized through the benefits of this condition-based approach. This degradation factor is therefore applied to the savings and multiplied by the AUC and the number of engines. The savings for one year are multiplied by the discount factor for that year—resulting in the PV of savings for that year. This number is then applied to each year of analysis for the length of the program.

Table 14. Per-Engine Savings Due to CBO

Overhaul Option	Cost in $K
TIGER-sustainment overhaul	260.0
CBO	183.0
Per Engine Savings	77.0
Percentage of CBO Savings	31.0%
Per Engine Labor Savings	10.7
Percentage of CBO Labor Savings	26.8%

The PV of the investment is the total investment cost for each program year, multiplied by the discount factor. The PV of the terminal value in this case is zero since no residual value is required to generate savings. These savings are also calculated for the entire length of the program. The *Army Economic Analysis Manual* discusses discount factors in the following way:

> Most cost comparison techniques take into consideration the time value of money, that is, a dollar today is worth some amount less in the future. For comparison purposes, future expenditures, occurring at different points in time, must be adjusted to a common point in time. This adjustment to a common point in time is called discounting or present value analysis. (US Army Cost and Economic Analysis Center, 2001, p. 21)

For comparison purposes, in this case the SIR reflects the PV of the savings and investments in constant dollars for the change to CBO. For this research, we

used mid-year, 30-year program discount factors provided by the Tank-automotive and Armaments Command (TACOM) Cost and Systems Analysis Directorate (White, 2009, p. 30). We used mid-year discount factors because we expect that expenditures will be spread throughout each year (US Army Cost and Economic Analysis Center, 2001, p. 22).

C. Results

After determining the investment costs of non-recurring and recurring expenses, as well as the variables associated with the AUCs of each, we can report the results of the status quo TIGER-sustainment overhaul and the CBO-sustainment overhaul. As indicated previously, there is a difference of opinion between TACOM/ANAD and Honeywell with regard to when a CBO-sustainment, or total overhaul, should be conducted. To address this difference, we considered the alternatives of a lower- and higher-hour breakpoint. Table 15 represents the comparison of alternatives at the baseline of 40 years based on discounted figures.

Table 15. 40-year Comparison of Alternatives

Alternatives		higher-hour	lower-hour
Costs in $M (Discounted)			
NRE	Additional Equipment	2.41	2.41
	Process Development	1.97	1.97
	Total NRE	4.38	4.38
RE	Additional Personnel	39.82	39.82
	Process Update	2.21	2.21
	Facility Maintenance	1.74	1.74
	Total RE	43.77	43.77
Total Cost (a)		48.15	48.15
Benefit in $M (Discounted)			
	Cost Savings	601.88	350.15
Total Benefit (b)		601.88	350.15
Savings-to-Investment Ratio (Discounted)			
= (b)/(a)		12.5	7.3

The reader will easily note that the SIR for both alternatives is quite large in comparison to other programs. This difference is due to the relatively small investment cost of implementing the CBO process in comparison to the cost savings achieved by not completely overhauling the engine every time it returns to the depot. Since the PM has made many of the initial investments under the TIGER contract (i.e., eMOT system, Engine Memory Units (EMU), hour meters, Fact-based Maintenance database, and development and engineering analysis of part life-limits and algorithms), the additional costs represented here are small, yet yield large ratios.

D. Sensitivity Analysis

Sensitivity analysis is used to evaluate the effect of uncertainty or unknowns on the ranking of alternatives (US Army Cost and Economic Analysis Center, 2001, p. 37). To evaluate the uncertainty in this study, we considered three items: the number of program years, the number of engines overhauled each year as a factor of CBO's effectiveness toward durability, and the distribution of engines falling into each WPG-time band.

1. Number of Program Years

The first sensitivity analysis conducted examines the SIR related to the number of program years of each alternative. It is currently uncertain if ANAD and Honeywell will actually implement CBO Likewise, there may be a move toward other methods at some future time if previous overhaul strategies are an indication. Additionally, a new engine may become available in the future, which may preclude the overhaul of TIGER AGT1500s. In view of these possibilities, we chose to examine the SIR at the 5-, 10-, 15-, 20- and 40-year marks for each of the higher-hour and lower-hour CBO-sustainment threshold alternatives. Table 16 presents these results.

As demonstrated in Table 16 and Figure 14, the number of program years does not change the ranking of alternatives. This consistency is due to the magnitude of savings represented in the higher-hour alternative each year. Thus, the savings will always be larger for the higher-hour alternative. This information may prove helpful to decision makers if the program does not reach FY 2050.

Table 16. Sensitivity Analysis Based on Number of Program Years

#	Alternative	5-year	10-year	15-year	20-year	40-year
1	higher-hour	8.1	9.3	10.1	10.7	12.5
2	lower-hour	4.7	5.4	5.9	6.2	7.3

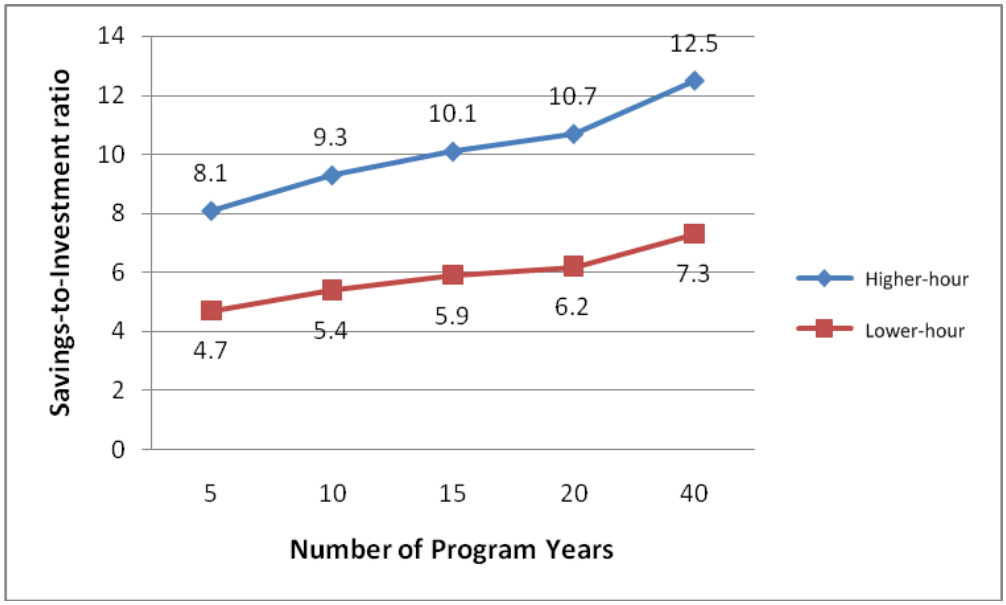

Figure 14. Savings-to-Investment Ratio Comparison

2. Number of Engines Overhauled due to CBO Effectiveness

As mentioned previously, other cost-savings overhaul strategies for the AGT1500 have been attempted but have resulted in a reduction in durability. Some have questioned the assumption that CBO will be effective and not negatively affect durability; however, we included this assumption when we made our baseline calculation. To address this concern, we supposed that an additional percentage of engines overhauled per year would be incurred as a result of a decrease in durability for each 100 hours delayed past the first 100 hours toward implementing the CBO-sustainment overhaul. We considered 2%, 3%, and 4% increases per 100 hours. Table 17 represents the number of engines overhauled and the SIR for each percentage considered.

Table 17. Sensitivity Analysis based on CBO Effectiveness

#	Alternative	Increased % Due to Loss in Durability	2%	3%	4%	# of Engines to Make SIR = 1.0
1	higher-hour	# of Engines	354	381	408	410
		SIR	6.9	4.0	1.2	
2	lower-hour	# of Engines	324	336	348	351
		SIR	4.4	2.9	1.4	

As demonstrated in Table 17, at 4%, the lower-hour alternative is more beneficial. It should be noted that the percentages used were not based on facts or coordinated with stakeholders but merely provide a basis of comparison for the alternatives. Although it is possible that CBO may cause a decrease in durability, the PM must monitor such an assumption in the years to come to prove it.

Additionally, if we assume that the lower-hour alternative is more effective at maintaining durability (represented by 300 engines overhauled annually), then for the SIR of both alternatives to be equal, mechanics would overhaul 350 engines annually under the higher-hour alternative.

3. Distribution of Engines in Each WPG-Time Band

In the course of this research, Honeywell provided us data that established the probability of distribution of engines in the WPG-time bands. Honeywell stated that this uniform distribution was based on their commercial fleet of aviation engines and auxiliary power units, which operate in a different environment than that of the AGT1500 on the ground. Based on a brief analysis of records of Service Life Extension (SLE) engines in the Honeywell Fact-based Maintenance database, we observed something representing more of an exponential distribution. To this end, we considered using an exponential distribution of engines falling into each time

band to capture the effects of premature failure and failures in engines with higher operating hours. We used the mean time between depot return (MTDBR) of 1,400 hours to calculate the exponential distribution. Table 18 presents the comparisons of these results to the uniform distribution.

Table 18. Sensitivity Analysis based on Distribution

#	Alternative	SIR with Uniform Distribution	SIR with Exponential Distribution	Increase to SIR
1	higher-hour	12.5	13.3	0.8
2	lower-hour	7.3	9.2	1.9
Difference		5.2	4.1	-

As demonstrated in Table 18, the use of an exponential distribution has a positive effect on the SIR of both alternatives since CBO benefits engines more in the lower bands of operating time. We observed that the lower-hour alternative presented a greater magnitude of increase because the number of engines represented in WPG-level 4 is decreased when using an exponential distribution. This, too, is another aspect of this research that has yet to be proven.

E. Chapter Conclusion

Through this analysis, we have quantified the possible savings which change to the CBO process may bring. We compared the savings represented by the difference between the average unit costs of the TIGER-sustainment and Condition-based Overhauled engines with the investment costs associated with this change and found that the SIR presented appears favorable. We conducted sensitivity analysis to address areas of uncertainty to present the results for decision-makers to consider. With these results in place, we can make conclusions and recommendations. Based on the data provided and the outcome of our research, the higher-hour CBO alternative provides the greatest amount of lifecycle savings to the government.

THIS PAGE INTENTIONALLY LEFT BLANK

VI. Conclusions and Recommendations

A. Conclusions

Based on the data available to perform this cost-benefit analysis (CBA), we found that the change to Condition-based Overhaul (CBO) at Anniston Army Depot (ANAD) Turbine Value Stream (TVS) will potentially provide significant operations and support cost savings from parts and labor cost reduction associated with this process change. As demonstrated by the savings-to-investment ratios (SIR) of each alternative, we found that the change to CBO appears to be warranted based on the minimal investment when compared to lifecycle savings. The addition of the engine memory unit (EMU) and hour meter to the TIGER AGT1500, and the concerted effort of data collection and application of component life-limit algorithms to the Work Planning Guide (WPG) will enhance ANAD TVS's ability to avoid completely overhauling each engine. This being said, the results of this study are very tentative.

Decision-makers should be aware that this study is the first effort to quantify the costs and benefits of CBO. In other words, over time, reality may prove different from our conclusions as more information is gained to implement and mature this process. It is also uncertain at this point what the effect of CBO will be on the TIGER AGT1500. As stated, previous attempts to gain savings through limited overhaul have not proven beneficial. If, during the CBO process and through data collection and analysis, a more intelligent and effective overhaul short of complete disassembly and rebuild can be achieved, the PM should be able to realize these cost savings. It should also be noted that this study did not address any changes at ANAD TVS, other than additions to the current process. There is the potential that the CBO process will drive many other changes at the facility that will impact the number of personnel working at ANAD TVS and the configuration of the facility currently used. Decision-makers should also consider these potential impacts, as the commitment to CBO is solidified.

Lastly, the CBO process now being discussed for implementation does not reflect condition-based maintenance (CBM) (as many may believe) in the form of predictive and prognostic CBM capability. The utilization of existing sensors and analysis of data recorded by the EMU allows for limited diagnostic capability to help inform the overhaul process. This practice, in conjunction with engineering analysis of parts durability, is the primary means by which the CBO process will potentially distinguish itself from previous cost-saving maintenance strategies. Time will determine the effectiveness of this change.

B. Recommendations

1. General

Because the CBO process is still in its infancy, decision-makers should move cautiously forward in implementing this approach. They should monitor the Pre-pilot and Pilot phases of implementation closely. Furthermore, the PM, TACOM and Honeywell should track the first engines emerging from ANAD TVS under CBO to determine the effectiveness of limited overhaul based on anticipated remaining useful life of components within. If 1,400 hours proves to be a realistic goal for TIGER AGT1500s to attain, the first engines may not return to the depot for five to six years. To address this extended period of time before depot return, ANAD and Honeywell should perform testing on CBO engines to determine that CBO procedures will not adversely affect the reliability of the engine.

2. Further Research

To address the tentative nature of this study, we make the following recommendations for further research:

a. One-piece Flow vs. Bay-style Overhaul

It is evident at ANAD TVS that lean procedures have played a beneficial role in improving the quality and cycle time of engines through the depot. Considering the changes discussed in implementing the CBO process, we can see it is apparent

that current one-piece flow efficiency may be affected by the tailored scope of work on individual engines going through the CBO process. A study comparing the impacts of maintaining the current process, the plan advanced by this research, as well as an all-bay-style approach and the effects on personnel (number and skill levels), facilities, and equipment required may prove beneficial to decision-makers as the process of CBO solidifies in the coming years.

b. CBO Effects on Parts Management

Currently, the TIGER contract requires Honeywell to provide kitting support to the overhaul process, ensuring that the right parts are at the right place at the right time. The current process of TIGER-reset (and potentially a TIGER-sustainment-only overhaul option) lends predictability to the number of parts required to overhaul engines annually at ANAD TVS. Under CBO, this predictability will be disrupted. It will be disrupted even more as a mature-CBO process evolves, as such a change would direct a more precise overhaul for each engine. Analysis of those impacts could help decision-makers understand how this variability will affect the number of parts required and what the challenge of providing those parts places on the supply system.

c. Engine Integrity

Under the current and proposed processes for overhauling the AGT1500, ANAD personnel disassemble and reassemble the engine with new parts. Although during CBO this disassembly process will be more controlled—as opposed to the current salvage disassembly performed—decision-makers have decided not to maintain engine integrity. A study investigating the effectiveness of maintaining engine integrity may prove beneficial in illuminating the pros and cons of such a decision. Engine integrity may be an essential consideration when decision-makers are attempting to gain the maximum useful life from components that have operated together.

THIS PAGE INTENTIONALLY LEFT BLANK

Appendix A. EMU Data Summary

Table removed due to proprietary information.
(From Honeywell, 2009)

THIS PAGE INTENTIONALLY LEFT BLANK

Appendix B. Honeywell Draft WPG

WPG Program			
Module	**WPG Directed Maintenance**	**Hourly Interval**	**Inspection Method**
External			
AGB			
RGB			
Forward			

Rear			

* Table sanitized due to proprietary information.

Appendix C. Mean Time Between Depot Return (MTBDR)

Mean Time between Depot Return (MTBDR) is a term used extensively throughout this research. It is one of the primary metrics of success for the TIGER program, as the goal of the program is to maintain a MTBDR of 1,400 engine hours across the fleet of TIGER AGT1500s in the field. Mean Time between Failure (MTBF) is another term used when determining the reliability of a system or its components. In this study, we have only focused on MTBDR. The reader should understand that MTBDR does not address the total number of failures that engines experience in the field, the remainder of which MTBF accounts for.

Based on a discussion the researchers had with Honeywell, MTBDR is calculated on a quarterly basis by comparing the tracked utilization of TIGER engines at specific locations (for example Fort Hood, Fort Stewart, and others) with the previous figures collected and then dividing that by the number of chargeable depot returns for that quarter. These numbers are then cumulatively added with the MTBDR that is reported as a 12-month moving average. For engines to be included in the MTBDR calculation they must be built to the TIGER BOM, have an operational hour meter, and have data recorded by a TIGER field service engineer (FSE). The total number of TIGER engines that are tracked can fluctuate from quarter to quarter as units deploy and new engines become visible in the Honeywell tracking system. Honeywell claims that the range of engines being tracked has fluctuated between 250 to 500 engines—out of a total of nearly 1,600 engines that have been produced. This low visibility is attributed to a number of factors, which include deployment cycles, new engine production, lag time in the supply system, and engines in the inventory but not yet in vehicles. Taking these factors into account, Honeywell is currently reporting a MTBDR of approximately 9,000 hours—with an average operating time of approximately 90 hours, and the highest engine operating time of approximately 400 hours. This MTBDR figure appears very large when compared to

the goal of 1,400 hours, but considering the total number of engines being tracked, and less than ten engines as chargeable depot returns, the numbers are correct.[16] It should be noted that it will likely take a number of years before the full number of TIGER engines are fielded and present a more stabilized MTBDR (Field, 2009).

[16] A chargeable depot return is adjudicated by ANAD and Honeywell.

Appendix D. Determination of Total Number of Tiger Engines

The total number of TIGER engines considered for this research is 3,500. This number for our calculations does not take into account Army Prepositioned Stock (APS) of 399, which are engines that rarely get used. Currently, approximately 1,600 TIGER AGT1500s have been produced—with production of TIGER-reset engines continuing until the full number is achieved. This number is important in Honeywell's calculation of MTBDR and for determining the total cost of the CBO process at Anniston Army Depot (ANAD) Turbine Value Stream (TVS). The number of engines required to fulfill the Department of Defense's (DoD) demand for TIGER engines is the sum of engines, as demonstrated in Table 19. Additionally, for our analysis we considered the fleet of M1s to be 3065, the sum of the numbers in bold in Table 19. This number aids in determining the number of engines overhauled each year.

Table 19. Breakdown of TIGER Engines Required by the DoD

Requirement	Quantity
Active Duty M1A1/M1A2 Fleet (in FY14)	**2505**
U.S. Marine Corps M1 Fleet	**400**
Joint Assault Bridge (JAB) & Advanced Bridging Vehicle (ABV)	**160**
Army Prepositioned Stock (APS)	399
Authorized Stockage List (ASL) at tactical level	205
6 months coverage of depot repair supply line	240
Total in vehicles	**3065**
Total	3909

The first aspect for consideration is the total number of vehicles. These vehicles are the active Army's M1A1s and M1A2s, as well as the Marine Corps' M1 fleet. The JAB and ABV are also included in this category because they are built on the M1 chassis and use the TIGER AGT1500.

The next category is Army Prepositioned Stock (APS), formerly known as Army War Reserve (AWR). The APS maintains assets that have been set aside for strategic purposes, ensuring that equipment and supplies are in place when contingencies arise. Engines represented in APS requirements are those in vehicles, as well as additional engines for replacement.

The remaining two categories pertain to engines in the logistical system. Engines maintained in supply at the tactical level are referred to as those in the Authorized Stockage List (ASL). Each brigade-sized element maintains a number of spare engines that can be quickly replaced in the field, thus not affecting operations and operational readiness. The last category is those engines maintained at the Supply Support Activity (SSA) to cover the logistical pipeline of engines in production or those being overhauled. The Tank armaments and Automotive Command (TACOM) stated that they intended this amount to cover six months of demand at 40 engines per month.

Appendix E. Number of Engines Overhauled At ANAD Annually

A major component in determining the savings-to-investment ratio (SIR) of this research is the number of engines to which the average unit cost (AUC) is applied. For our calculations we considered 300 engines overhauled per year. This number was recommended by ANAD as well as by TACOM as a reasonable figure based on a combination of M1 production and field failures, but we also arrived at this by our own calculations (Hoffman & Gunnels, 2009).

To arrive at this number, the researchers calculated the following: First, we assumed that each engine will achieve 1,400 hours of operation based on the goal of 1,400 hours MTBDR. This number was then multiplied by 10, the estimation of miles per engine operating hour.[17] This product was then divided by 794 operations tempo (OPTEMPO) miles per year. OPTEMPO miles were calculated from Operations and Support Management Information System (OSMIS) relational database data. By using the weighted average of 10 years' contingency operations mileage for M1A1s and M1A2s, we were able to calculate the average OPTEMPO applied for this study.[18] This equals 17.63 years. Lastly, the number of tanks used for this calculation, 3065 (see Appendix D), is divided by 17.63 years—yielding a result of 174 engines requiring overhaul per year. For ease of calculation and unknown variability, we rounded up to 200 engines per year.

In addition to these engines, another 100 engines will be included representing those engines failing in the field due to one of the reasons for return maintenance. This number was determined by two methods. The first was to view

---

[17] Ten miles per operating hour is often used to account for the M1's anticipated silent watch mode of operation. This is also referenced in the *Army Oil Analysis Program (AOAP) Guide TB 43-0211.*

[18] The researcher's search criteria for OSMIS was 1998-2008, M1A1 and M1A2, FORSCOM, EUCOM, PACOM. We also applied a contingency operations filter.

the number of “return to stock” engines indicated on TACOM’s production schedule (Ballentine, 2009). For this calculation, three years were represented, totaling 312 engines with an annual average of 104 engines. The other method for determining this number was viewing the TIGER FBM Database and filtering all of the engines based on those requiring depot-level maintenance. The researchers viewed a total of 385 records from March 2006 through October 2009. Since two of the years represented were not complete, we divided the 385 engines by 44 months and then multiplied that number by 12 months—yielding 105 engines per year. Due to the limited number of years represented and for ease of calculation and unknown variability, we chose 100 engines per year to represent estimated field returns. Thus, the combination of 200 production engines and 100 field failures equals 300 engines.

Appendix F. Engine Cost

When considering the cost of a TIGER engine, it is important to understand how the cost is derived. The Army Master Data File (AMDF)[19] is a database of all items for requisition through the Army's supply system. The prices indicated in the AMDF are the prices that units are required pay from their operating budgets to requisition the item. This process can be confusing when considering the price of the TIGER engine. The AMDF price for a TIGER engine is currently $502,084. However, when an engine is replaced, the unit also receives either a serviceable or unserviceable turn-in credit, which essentially lowers the real cost of the engine to the unit.

For this research, we are only considering the cost that the Government incurs to purchase or overhaul the TIGER engine. This is the cost of parts, labor and overhead associated with building or overhauling the engine at ANAD TVS. This, we feel, is a more accurate reflection of the actual cost of the engine. Each year TACOM dictates the number of engines inducted into the overhaul process in addition to field demand. Although the cost associated with each engine overhauled under CBO will be different, ANAD specifies a price that the government pays for each engine—an average unit cost (AUC). This number changes from year to year as the demand fluctuates, and, since ANAD is funded via the Army Working Capital Fund (AWCF), the cost to the government will change accordingly to maintain ANAD TVS at zero profit. Additionally, the cost associated with parts will potentially rise as the demand for parts kits declines in the future. In Table 20, the various prices for the TIGER engine are provided for ease of comparison.

[19] The Army Master Data File is also referred to as FEDLOG.

Table 20. TIGER AGT1500 Costs

Price	Cost in $	Residual Cost in $
AMDF TIGER AGT1500	502,084	-
AMDF TIGER serviceable turn-in credit	438,885	63,199
AMDF TIGER unserviceable turn-in credit	185,121	316,963
PM TIGER-reset AGT1500	400,000	-
PM TIGER-sustainment AGT1500	260,000	-

Appendix G. CBO Funding Appropriations

It should be noted that three funding streams of appropriations are associated with the TIGER contract: Procurement Appropriations (PA), Army Working Capital Funds (AWCF), and Operations and Maintenance (OMA) funds. For CBO, the development of increased durability components and capital equipment investments to implement the process are included in PA funds. The AWCF funding stream is the primary means to pay for the repair work associated with the CBO process. OMA funds, although relevant, do not form the majority of the funding for this endeavor.

The AWCF is a revolving fund that receives payment from operational units to provide maintenance, parts, and services for their equipment. The AWCF typically funds labor, parts, and overhaul activities. The TIGER contract will continue authorized activities in the sustainment phase of the TIGER program with the use of AWCF funds and with the addition for OMA funds that will cover some CBM activities under System Technical Support. PA funds will discontinue as soon as the program enters the sustainment phase, and all changes are complete (M. VanHoek, personal communication, October 8, 2009).

THIS PAGE INTENTIONALLY LEFT BLANK

Appendix H. Monte Carlo Simulation

A complete copy of the model file is available upon request from the authors.

					Analysis		Directed Work Planning Guide (WPG)									RFR Maintenance		Test	
OH Seq-uence	Hours from Meter	Band	Cum Hour	Time Pass (yr)	PSA Cost	DA Cost	WPG 1 Cost	Band 2 Compo' Hour	WPG 2 Cost	Band 3 Compo' Hour	WPG 3 Cost	Band 4 Compo' Hour	WPG 4 Cost	WPG 5 Cost	WPG Cost Total	RFR	RFR Maint' Cost	Test Cost	Total Cost per seq'
1	249	Band 2	249	1	$ 180	$ 1,620	$ -	249	$ -	249	$ -	249	$ -	$ -	$ -	Full ENG	$ 266,400	$ -	$ 268,200
2	107	Band 2	356	1	$ 270	$ 1,710	$ 1,548	107	$ 2,146	107	$ -	107	$ -	$ -	$ 3,693	CAT 5	$ 92,430	$ 2,593	$ 100,696
3	2154	Band 5	2510	10	$ 360	$ 3,240	$ -	2154	$ -	2261	$ -	2261	$ -	$ 266,400	$ 266,400	N/A	$ -	$ -	$ 270,000
4	16	Band 1	2526	10	$ 360	$ 990	$ 1,548	16	$ -	16	$ -	16	$ -	$ -	$ 1,548	No Fail	$ -	$ 2,551	$ 5,449
5	2267	Band 5	4793	19	$ 270	$ 3,060	$ -	2283	$ -	2283	$ -	2283	$ -	$ 266,400	$ 266,400	N/A	$ -	$ -	$ 269,730
6	564	Band 4	5357	21	$ 270	$ 3,600	$ 1,548	564	$ 2,146	564	$ 28,058	564	$ 29,315	$ -	$ 61,066	CAT 3	$ 37,670	$ 2,978	$ 105,584
7	607	Band 4	5964	23	$ 270	$ 3,240	$ 1,548	607	$ 2,146	607	$ 28,058	607	$ 29,315	$ -	$ 61,066	CAT 2	$ 4,030	$ 2,774	$ 71,380
8	828	Band 4	6792	27	$ 270	$ 3,240	$ 1,548	828	$ 2,146	828	$ 28,058	828	$ 29,315	$ -	$ 61,066	CAT 2	$ 4,030	$ 2,690	$ 71,296
9	679	Band 4	7471	29	$ 270	$ 3,240	$ 1,548	679	$ 2,146	679	$ 28,058	679	$ 29,315	$ -	$ 61,066	CAT 3	$ 37,670	$ 2,770	$ 105,016
10	301	Band 3	7772	30	$ 270	$ 2,700	$ 1,548	301	$ 2,146	301	$ 28,058	301	$ -	$ -	$ 31,751	CAT 2	$ 4,030	$ 2,705	$ 41,456
																Average Cost per Engine			$ 130,881

THIS PAGE INTENTIONALLY LEFT BLANK

Appendix I. Discount Factors

REVISED DISCOUNT FACTORS--JANUARY 2009

	MID-YEAR FACTORS		END-OF-YEAR FACTORS	
	30 Year Project			
Project Years	Constant Dollars (2.70%)	Current Dollars (4.50%)	Constant Dollars (2.70%)	Current Dollars (4.50%)
1	0.9868	0.9782	0.9737	0.9569
2	0.9608	0.9361	0.9481	0.9157
3	0.9356	0.8958	0.9232	0.8763
4	0.9110	0.8572	0.8989	0.8386
5	0.8870	0.8203	0.8753	0.8025
6	0.8637	0.7850	0.8523	0.7679
7	0.8410	0.7512	0.8299	0.7348
8	0.8189	0.7188	0.8080	0.7032
9	0.7974	0.6879	0.7868	0.6729
10	0.7764	0.6583	0.7661	0.6439
11	0.7560	0.6299	0.7460	0.6162
12	0.7361	0.6028	0.7264	0.5897
13	0.7168	0.5768	0.7073	0.5643
14	0.6979	0.5520	0.6887	0.5400
15	0.6796	0.5282	0.6706	0.5167
16	0.6617	0.5055	0.6529	0.4945
17	0.6443	0.4837	0.6358	0.4732
18	0.6274	0.4629	0.6191	0.4528
19	0.6109	0.4429	0.6028	0.4333
20	0.5948	0.4239	0.5869	0.4146
21	0.5792	0.4056	0.5715	0.3968
22	0.5639	0.3882	0.5565	0.3797
23	0.5491	0.3714	0.5419	0.3634
24	0.5347	0.3554	0.5276	0.3477
25	0.5206	0.3401	0.5137	0.3327
26	0.5069	0.3255	0.5002	0.3184
27	0.4936	0.3115	0.4871	0.3047
28	0.4806	0.2981	0.4743	0.2916
29	0.4680	0.2852	0.4618	0.2790
30	0.4557	0.2729	0.4497	0.2670

(From White, 2009)

THIS PAGE INTENTIONALLY LEFT BLANK

List of References

Anniston Army Depot Turbine Value Stream. (2007). *Shingo award background information*. Retrieved November 6, 2009, from Anniston Army Depot, http://www.anad.army.mil/shingo.shtml

Balakrishnan, N., Render, B., & Stair Jr., R.M. (2007). *Managerial decision modeling with spreadsheets* (2nd ed.). Upper Saddle River, NJ: Pearson Education.

Ballentine, A. (2009, August 6). [E-mail correspondence with authors].

Banks, J. (2008, August). *HBCT vehicle degraders: Potential health management solutions analysis for the M1A2 SEP v2 Abrams tank and the M1A1 SA Abrams tank.* University Park, PA: The Pennsylvania State University.

Banks, J. (2009, July 24). [Interview with authors].

Belcher, S.W., Stoloff, P., & Lawler K.S. (2006). *Billet analysis tool (BAT).* Alexandria, VA: Center for Naval Analyses.

Burkhart, R. (2009, October 8). [E-mail correspondence with authors].

Chait, R., Lyons, J., & Long, D. (2005, December). *Critical technology events in the development of the Abrams tank.* Retrieved August 27, 2009, from National Defense University Center for Technology and National Security Policy, http://www.ndu.edu/ctnsp/publications.html

Clark, R. (1988). *System dynamics and modeling.* Hanover, MD: Operations Research Society of America.

Clinton, D. (2009, July 13). [Interview with authors].

Defense Update. (2006, August 3). *Merkava Mk4 detailed.* Retrieved August 27, 2009, from http://www.defense-update.com/directory/merkava4.htm

Department of the Army. (2004 , December 1). *Army oil analysis program TB-43-0211.* Retrieved November 06, 2009, from Integrated Publishing, http://www.tpub.com/content/automotiveaccessories/TB-43-0211/TB-43-02110001.htm

DoD Civilian Personnel Management Service. (2009). *Federal wage system regular and special production facilitating wage rate schedules .* Retrieved October 2, 2009, from http://www.cpms.osd.mil/wage/scheds/af/survey-sch/001/001R-16Jun2009.html

Fan, C.E., Peltz, E., & Colabella, L. (2005). *The effects of equipment age on spare part costs: A study of M1 tanks.* Santa Monica: RAND.

fedjobs.com. (2009, October). *Salary table RUS.* Retrieved October 2, 2009, from http://www.fedjobs.com/pay/restofus.html

Field, E. (2009, October 15). [E-mail correspondence with authors].

Folkeson, J.R., & Brauner, M.K. (2005). *Improving the Army's management of reparable spare parts.* Santa Monica: RAND.

Free Republic. (2004, January 13). *The FReeper foxhole.* Retrieved October 27, 2009, from http://www.freerepublic.com/focus/f-vetscor/1056809/posts

General Electric. (2002, June 11). *Press release.* Retrieved June 18, 2009, from GE Aviation, http://www.geae.com/aboutgeae/presscenter/military/military_20020611.html

GlobalSecurity.org. (n.d.). *M1 Abrams operations and support.* Retrieved August 10, 2009, from http://www.globalsecurity.org/military/systems/ground/m1-os.htm

GlobalSecurity.org. (2009, May 29). *Military: M1 Abrams main battle tank.* Retrieved May 29, 2009, from http://www.globalsecurity.org/military/systems/ground/m1-intro.htm

Green, M., & Stewart, G. (2005). *M1 Abrams at war.* St. Paul: Zenith Press.

Grobianischus. (2008, July 1). *MBT-70.* Retrieved October 27, 2009, from Flickr, http://www.flickr.com/photos/23731845@N08/2627110189

Gunnels, C. (2007). *Anniston Army Depot turbine value stream shingo award background information.* Anniston, AL: Anniston Army Depot.

Gunnels, C. (2009, August 7). [E-mail correspondence with researchers].

Gunnels, C. (2009a, September 11). [E-mail correspondence with authors].

Gunnels, C. (2009b, September 28). [E-mail correspondence with authors].

Headquarters, Department of the Army, Deputy Chief of Staff, G-4. (2007). *U.S. Army CBM+ roadmap.* Washington, DC: Department of the Army.

Hoffman, B. (2009 September 13). [Interview with authors].

Hoffman, B. & Gunnels, C. (2009, September 2). [Interview with authors].

Honeywell International, Inc. (2005). *AGT 1500 familiarization course study guide.* Phoenix: Author.

Honeywell International, Inc. (2009, June). *TIGER durability projects.* Phoenix: Honeywell International Inc.

Marine Corps Systems Command. (1992, November). *Principles of inspect, repair only as necessary (IROAN): Procedures and preparation of IROAN publications military standard.* Quantico, VA: Marine Corps Systems Command.

Marsh, D. (2009, October 12). [E-mail correspondence with authors].

McKernan, M.T. (2002, September). Direct support plus in Korea. *Army Logistician*, pp. 44-46.

Mid-American Manufacturing and Technology Center (MAMTC). (2009, October 21). *One-piece flow.* Retrieved October 21, 2009, from http://www.mamtc.com/lean/building_onePiece.asp

Milanov, T. (2009, October 6). [E-mail correspondence with authors].

Myrick, M. (2007, August 23). *Army.Mil News*. Retrieved June 15, 2009, from http://www.army.mil/-news/2007/08/23/4552-shingo-results-in-anad-to-be-awarded/

National Aeronautics and Space Administration (NASA). (2009). *Brief history of rockets*. Retrieved August 27, 2009, from Glenn Technologies Learning Projects, http://www.grc.nasa.gov/WWW/K-12/TRC/Rockets/history_of_rockets.html#navskip

Norwegian Petroleum Directorate. (2006, March 29). *Research and development*. Retrieved August 27, 2009, from http://www.npd.no/English/Emner/Forskning+og+utvikling/norsksokkel_3_2005_medhjartaparettestaden_290306.htm

Ogorkiewicz, R.M. (2001). *The technology of tanks.* Surrey, UK: Jane's Information Group.

Osborn, K. (2009, May 18). FCS Is dead; Programs live on. *Defense News.* Retrieved August 3, 2009, from http://www.defensenews.com/story.php?i=4094484

Palmeri, C. (2004, May 3). Frank Whittle: A daredevil who built jets. *Business Week.* Retrieved August 27, 2009, from http://www.businessweek.com/magazine/content/04_18/b3881044_mz072.htm

PBS. (1998). *A science odyssey: People and discoveries: Ford installs first moving assembly line.* Retrieved August 4, 2009, from http://www.pbs.org/wgbh/aso/databank/entries/dt13as.html

Peltz, E., Colbella, L., Williams, B., & Boren, P.M. (2004). *The effects of equipment age on mission critical failure rates: A study of M1 tanks.* Santa Monica: RAND.

Polletta, S. (2009). *Takt time*. Retrieved September 25, 2009, from iSixSigma, http://www.isixsigma.com/dictionary/Takt_Time-455.htm

Quintus, B. (2009 September 29). [E-mail correspondence with authors].

Rendon, R.G., & Snider, K.F. (2008). *Management of defense acquistion projects.* Reston, VA, 20910. American Institute of Aeronautics and Astronautics.

Smith, B. (2009, June 16). [E-mail correspondence with authors].

Sustaining the M1 Abrams: US Army puts a TIGER in its tanks. (2009, August 9). *Defense Industry Daily*. Retrieved April 28, 2009, from http://www.defenseindustrydaily.com/sustaining-the-m1-abrams-us-army-puts-a-tiger-in-its-tanks-01790/

TACOM Contracting Center. (2009, June 15). *Justification and approval for other than full and open competition.* Warren, MI: TACOM Contracting Center.

US Army Contracting Command. (2005, December 16). *Honeywell Total Integrated Engine Revitalization contract* (W56HZV-06-C-0173). Warren, MI: US Army.

US Army Cost and Economic Analysis Center. (2001, February). *Economic analysis manual.* Washington, DC: US Army.

Voss, B. (2009, July 13). [Interview with authors].

White, M. (2009). *TACOM discounting guide.* Warren, MI: TACOM Cost and System Analysis Directorate.

Zaloga, S.J., & Sarson, P. (1993). *M1 Abrams main battle tank 1982-1992.* London: Osprey Publishing.

2003 - 2009 Sponsored Research Topics

Acquisition Management

- Acquiring Combat Capability via Public-Private Partnerships (PPPs)
- BCA: Contractor vs. Organic Growth
- Defense Industry Consolidation
- EU-US Defense Industrial Relationships
- Knowledge Value Added (KVA) + Real Options (RO) Applied to Shipyard Planning Processes
- Managing the Services Supply Chain
- MOSA Contracting Implications
- Portfolio Optimization via KVA + RO
- Private Military Sector
- Software Requirements for OA
- Spiral Development
- Strategy for Defense Acquisition Research
- The Software, Hardware Asset Reuse Enterprise (SHARE) repository

Contract Management

- Commodity Sourcing Strategies
- Contracting Government Procurement Functions
- Contractors in 21st-century Combat Zone
- Joint Contingency Contracting
- Model for Optimizing Contingency Contracting, Planning and Execution
- Navy Contract Writing Guide
- Past Performance in Source Selection
- Strategic Contingency Contracting
- Transforming DoD Contract Closeout
- USAF Energy Savings Performance Contracts
- USAF IT Commodity Council
- USMC Contingency Contracting

Financial Management

- Acquisitions via Leasing: MPS case
- Budget Scoring
- Budgeting for Capabilities-based Planning
- Capital Budgeting for the DoD
- Energy Saving Contracts/DoD Mobile Assets
- Financing DoD Budget via PPPs
- Lessons from Private Sector Capital Budgeting for DoD Acquisition Budgeting Reform
- PPPs and Government Financing
- ROI of Information Warfare Systems
- Special Termination Liability in MDAPs
- Strategic Sourcing
- Transaction Cost Economics (TCE) to Improve Cost Estimates

Human Resources

- Indefinite Reenlistment
- Individual Augmentation
- Learning Management Systems
- Moral Conduct Waivers and First-tem Attrition
- Retention
- The Navy's Selective Reenlistment Bonus (SRB) Management System
- Tuition Assistance

Logistics Management

- Analysis of LAV Depot Maintenance
- Army LOG MOD
- ASDS Product Support Analysis
- Cold-chain Logistics
- Contractors Supporting Military Operations
- Diffusion/Variability on Vendor Performance Evaluation
- Evolutionary Acquisition

- Lean Six Sigma to Reduce Costs and Improve Readiness
- Naval Aviation Maintenance and Process Improvement (2)
- Optimizing CIWS Lifecycle Support (LCS)
- Outsourcing the Pearl Harbor MK-48 Intermediate Maintenance Activity
- Pallet Management System
- PBL (4)
- Privatization-NOSL/NAWCI
- RFID (6)
- Risk Analysis for Performance-based Logistics
- R-TOC AEGIS Microwave Power Tubes
- Sense-and-Respond Logistics Network
- Strategic Sourcing

Program Management

- Building Collaborative Capacity
- Business Process Reengineering (BPR) for LCS Mission Module Acquisition
- Collaborative IT Tools Leveraging Competence
- Contractor vs. Organic Support
- Knowledge, Responsibilities and Decision Rights in MDAPs
- KVA Applied to AEGIS and SSDS
- Managing the Service Supply Chain
- Measuring Uncertainty in Earned Value
- Organizational Modeling and Simulation
- Public-Private Partnership
- Terminating Your Own Program
- Utilizing Collaborative and Three-dimensional Imaging Technology

A complete listing and electronic copies of published research are available on our website: www.acquisitionresearch.org

THIS PAGE INTENTIONALLY LEFT BLANK

ACQUISITION RESEARCH PROGRAM
GRADUATE SCHOOL OF BUSINESS & PUBLIC POLICY
NAVAL POSTGRADUATE SCHOOL
555 DYER ROAD, INGERSOLL HALL
MONTEREY, CALIFORNIA 93943

www.acquisitionresearch.org