Calhoun: The NPS Institutional Archive

DSpace Repository

Theses and Dissertations | 1. Thesis and Dissertation Collection, all items

2016

Renewable production of water, hydrogen, and power from ambient moisture

Aviles, Angel

Monterey, California: Naval Postgraduate School

http://hdl.handle.net/10945/51584

This publication is a work of the U.S. Government as defined in Title 17, United States Code, Section 101. Copyright protection is not available for this work in the United States.

Downloaded from NPS Archive: Calhoun

Calhoun is the Naval Postgraduate School's public access digital repository for research materials and institutional publications created by the NPS community. Calhoun is named for Professor of Mathematics Guy K. Calhoun, NPS's first appointed -- and published -- scholarly author.

Dudley Knox Library / Naval Postgraduate School
411 Dyer Road / 1 University Circle
Monterey, California USA 93943

http://www.nps.edu/library

NAVAL POSTGRADUATE SCHOOL

MONTEREY, CALIFORNIA

THESIS

RENEWABLE PRODUCTION OF WATER, HYDROGEN, AND POWER FROM AMBIENT MOISTURE

by

Angel Aviles

December 2016

Thesis Advisor: Garth V. Hobson
Co-Advisor: Anthony J. Gannon

Approved for public release. Distribution is unlimited.

THIS PAGE INTENTIONALLY LEFT BLANK

REPORT DOCUMENTATION PAGE	Form Approved OMB No. 0704–0188

Public reporting burden for this collection of information is estimated to average 1 hour per response, including the time for reviewing instruction, searching existing data sources, gathering and maintaining the data needed, and completing and reviewing the collection of information. Send comments regarding this burden estimate or any other aspect of this collection of information, including suggestions for reducing this burden, to Washington headquarters Services, Directorate for Information Operations and Reports, 1215 Jefferson Davis Highway, Suite 1204, Arlington, VA 22202-4302, and to the Office of Management and Budget, Paperwork Reduction Project (0704-0188) Washington, DC 20503.

1. AGENCY USE ONLY *(Leave blank)*	2. REPORT DATE December 2016	3. REPORT TYPE AND DATES COVERED Master's thesis

4. TITLE AND SUBTITLE RENEWABLE PRODUCTION OF WATER, HYDROGEN, AND POWER FROM AMBIENT MOISTURE	5. FUNDING NUMBERS
6. AUTHOR(S) Angel Aviles	
7. PERFORMING ORGANIZATION NAME(S) AND ADDRESS(ES) Naval Postgraduate School Monterey, CA 93943-5000	8. PERFORMING ORGANIZATION REPORT NUMBER
9. SPONSORING /MONITORING AGENCY NAME(S) AND ADDRESS(ES) Office of Naval Research, Energy Systems Technology Evaluation Program (ESTEP), under technical monitoring of Stacey Curtis and Richard Carlin.	10. SPONSORING / MONITORING AGENCY REPORT NUMBER

11. SUPPLEMENTARY NOTES The views expressed in this thesis are those of the author and do not reflect the official policy or position of the Department of Defense or the U.S. Government. IRB number ____N/A____.

12a. DISTRIBUTION / AVAILABILITY STATEMENT Approved for public release. Distribution is unlimited.	12b. DISTRIBUTION CODE

13. ABSTRACT (maximum 200 words)

This thesis developed a concept design and prototype system capable of increasing and improving the main energy constraints the Department of Defense must overcome to meet future mission requirements, energy availability and resiliency. The prototype system will reduce the dependency on fossil fuels by generating specific amounts of power using hydrogen produced with only renewable sources. To achieve this the prototype system relies in the integration of various commercially available components: solar panels, dehumidification units, electrolytic cell, diaphragm pump and proton exchange membrane (PEM) fuel cell.

Experimental results were obtained for each of the components. The solar panels were found to generate sufficient power to operate all the components in the system. The dehumidification units showed lower capacity for water extraction from ambient moisture than expected. The electrolytic cell was found to use less power to produce the hydrogen flow required than anticipated. The PEM fuel cell presented an exponential decrease in power generated halfway through the tested operational cycle that can be attributed to low hydrogen mass flow and low hydrogen pressure. Even though the prototype system was found to operate at lower efficiencies than other established power generating systems, the main objectives for this thesis were achieved, and the system showed great capacity for further improvements toward increasing and improving energy availability and resiliency. Recommendations are given to increase the water extraction from ambient moisture, increase the mass flow of hydrogen to improve the power quality generated by the PEM fuel cell, increase the pressure for the hydrogen prior to the PEM fuel cell, and implementation of an automated data collection method.

14. SUBJECT TERMS renewable energy, renewable source, water, dehumidification unit, electrolytic cell, electrolyzer, HydroTube, hydrogen, PEM fuel cell, fuel cell	15. NUMBER OF PAGES 101
	16. PRICE CODE

17. SECURITY CLASSIFICATION OF REPORT	18. SECURITY CLASSIFICATION OF THIS PAGE	19. SECURITY CLASSIFICATION OF ABSTRACT	20. LIMITATION OF ABSTRACT
Unclassified	Unclassified	Unclassified	UU

NSN 7540–01-280-5500 Standard Form 298 (Rev. 2–89) Prescribed by ANSI Std. 239–18

THIS PAGE INTENTIONALLY LEFT BLANK

Approved for public release. Distribution is unlimited.

RENEWABLE PRODUCTION OF WATER, HYDROGEN, AND POWER FROM AMBIENT MOISTURE

Angel Aviles
Lieutenant, United States Navy
B.S., Polytechnic University of Puerto Rico, 2008

Submitted in partial fulfillment of the
requirements for the degree of

MASTER OF SCIENCE IN MECHANICAL ENGINEERING

from the

NAVAL POSTGRADUATE SCHOOL
December 2016

Approved by: Garth V. Hobson, Ph.D.
Thesis Advisor

Anthony J. Gannon, Ph.D.
Co-Advisor

Garth V. Hobson, Ph.D.
Chair, Department of Mechanical and Aerospace Engineering

THIS PAGE INTENTIONALLY LEFT BLANK

ABSTRACT

This thesis developed a concept design and prototype system capable of increasing and improving the main energy constraints the Department of Defense must overcome to meet future mission requirements, energy availability and resiliency. The prototype system will reduce the dependency on fossil fuels by generating specific amounts of power using hydrogen produced with only renewable sources. To achieve this the prototype system relies in the integration of various commercially available components: solar panels, dehumidification units, electrolytic cell, diaphragm pump and proton exchange membrane (PEM) fuel cell.

Experimental results were obtained for each of the components. The solar panels were found to generate sufficient power to operate all the components in the system. The dehumidification units showed lower capacity for water extraction from ambient moisture than expected. The electrolytic cell was found to use less power to produce the hydrogen flow required than anticipated. The PEM fuel cell presented an exponential decrease in power generated halfway through the tested operational cycle that can be attributed to low hydrogen mass flow and low hydrogen pressure. Even though the prototype system was found to operate at lower efficiencies than other established power generating systems, the main objectives for this thesis were achieved, and the system showed great capacity for further improvements toward increasing and improving energy availability and resiliency. Recommendations are given to increase the water extraction from ambient moisture, increase the mass flow of hydrogen to improve the power quality generated by the PEM fuel cell, increase the pressure for the hydrogen prior to the PEM fuel cell, and implementation of an automated data collection method.

THIS PAGE INTENTIONALLY LEFT BLANK

TABLE OF CONTENTS

I. INTRODUCTION....1
- A. MOTIVATION....2
- B. OBJECTIVES....3
- C. CHALLENGES....4
- D. LITERATURE REVIEW....5

II. CONCEPT DESIGN AND EQUIPMENT....11
- A. CONCEPT DESIGN....11
- B. SELECTION PROCESS FOR SYSTEM COMPONENTS....13
  - 1. Renewable Energy Source....13
  - 2. Water Source....13
  - 3. Hydrogen Production....15
  - 4. Fuel Cell....17

III. EQUIPMENT AND SYSTEM CONFIGURATION....19
- A. SOLAR PANELS....19
- B. COMBINER BOX, CHARGE CONTROLLER, BREAKER PANEL AND BATTERIES....20
- C. DEHUMIDIFICATION UNITS AND STORAGE TANKS....24
- D. ELECTROLYTIC CELL....25
- E. PEM FUEL CELLS....27

IV. OBSERVATIONS AND RESULTS....29
- A. COMPONENTS PERFORMANCE....29
  - 1. Solar Panels Performance....29
  - 2. Dehumidification Units Performance....30
  - 3. Electrolytic Cell Performance....32
  - 4. PEM Fuel Cell Performance....34
- B. SYSTEM PERFORMANCE....37

V. CONCLUSION....43

VI. RECOMMENDATIONS....45

APPENDIX A. CONCEPT DESIGN DIAGRAM....47

APPENDIX B. CONCEPT DESIGN DIAGRAM WITH DIAPHRAGM PUMP....49

APPENDIX C. TABLE COMPARING FIVE COMMERCIAL HYDROGEN FUEL CELLS. ADAPTED FROM [26]....51

APPENDIX D. SOLAR PANEL SPECIFICATIONS.....53

APPENDIX E. BREAKER PANEL WIRING DESCRIPTION.....55

APPENDIX F. INCOMING AND OUTGOING CONNECTIONS TO CHARGE CONTROLLER AND BREAKER PANEL.....57

APPENDIX G. SYSTEM ONE LINE DIAGRAM.....59

APPENDIX H. CALCULATIONS.....61

- **A. NUMBER OF DEHUMIDIFIERS NEEDED BASED ON HYDROGEN FUEL CELL'S VOLUMETRIC FLOW RATE REQUIREMENT.....61**
- **B. POWER REQUIRE BY THE HYDROTUBE TO PRODUCE THE HYDROGEN VOLUMETRIC FLOW NEEDED TO ACHIEVE MAX POWER OUTPUT BY THE HYDROGEN FUEL CELL.....64**
- **C. AMPERAGE REQUIRE TO MEET THE POWER DEMAND BY THE HYDROTUBE FOR MAX POWER OUTPUT BY THE HYDROGEN FUEL CELL AT DIFFERENT VOLTAGE CONFIGURATIONS.....64**
- **D. ENERGY REQUIRE TO COMPRESS THE HYDROGEN WITH A DIAPHRAGM PUMP FROM 0.942 BAR TO 1.265 BAR.....65**

APPENDIX I. PEM FUEL CELL (HORIZON, H-100) SPECIFICATIONS.....69

- **A. H-100: TECHNICAL SPECIFICATIONS.....69**
- **B. H-100: SYSTEM SETUP DIAGRAM.....70**
- **C. H-100: PERFORMANCE CHARACTERISTICS.....71**

APPENDIX J. PEM FUEL CELL (HORIZON, H-20) SPECIFICATIONS.....73

APPENDIX K. PEM FUEL CELL (HORIZON, H-1000) SPECIFICATIONS.....75

APPENDIX L. PEM FUEL CELL (HORIZON, H-5000) SPECIFICATIONS.....77

LIST OF REFERENCES.....79

INITIAL DISTRIBUTION LIST.....83

LIST OF FIGURES

Figure 1. DOE Projections for Capacities of Hydrogen Production Plants. Source: [10]....7

Figure 2. Concept Design Diagram....12

Figure 3. Operating Diagram of a PEM fuel cell [25]....18

Figure 4. Array of Solar Panels....19

Figure 5. Combiner Box Wiring Configurations....20

Figure 6. Charge Controller Wiring Configurations....21

Figure 7. Breaker Panel Wiring Configurations....22

Figure 8. Batteries, Breaker Panel and Charge Controller Wiring Configuration....23

Figure 9. System One Line Diagram....23

Figure 10. Dehumidification Units Configuration....24

Figure 11. Storage Tanks and HydroTube Configuration....25

Figure 12. HydroTube and PWM Configuration....26

Figure 13. Bubbler, Desiccant Dryer and Flow Meter Piping Configuration....27

Figure 14. H-100 PEM Fuel Cell Configuration....28

Figure 15. Solar Panels Current and Proposed Location to Improve Sun Light Availability Throughout the Day....30

Figure 16. PEM Fuel Cell-H100: Voltage vs. Time....35

Figure 17. PEM Fuel Cell-H100: Power vs. Time....35

Figure 18. H20 PEM Fuel Cell Configuration....37

Figure 19. Concept Design Diagram with Diaphragm Pump....38

Figure 20. Concept Design Diagram with Diaphragm Pump....39

Figure 21. PEM Fuel Cell (Horizon, H-100) Technical Specifications. Source: [32]....69

Figure 22. PEM Fuel Cell (Horizon, H-100) System Setup Diagram. Source: [32]. 70

Figure 23. PEM Fuel Cell (Horizon, H-100) Performance Characteristics. Source: [32]. 71

Figure 24. PEM Fuel Cell (Horizon, H-20) Technical Specifications. Source: [33]. 73

Figure 25. PEM Fuel Cell (Horizon, H-1000) Technical Specifications. Source: [34]. 75

Figure 26. PEM Fuel Cell (Horizon, H-5000) Technical Specifications. Source: [35]. 77

LIST OF TABLES

Table 1. DOE Technical Targets for Fuel Cell Backup Power Systems. Adapted from [14].....8

Table 2. Comparison Among Electrolyzers Used in the Electrolytic Process. Adapted from [22].....16

Table 3. Average Power Requirement for the Components in the System.....29

Table 4. Comparison of Daily Water Extraction Capacity for the Dehumidification Units.....31

Table 5. Comparison of Water Flow Rate Produced by the Dehumidification Units and the Required By the System Over a Day of Operation. 32

Table 6. Comparison Between Power Requirement Specified By the Manufacturer and the One Observed During Testing for the Dehumidification Units.....32

Table 7. Comparison Between the Power Requirement Recommended By Manufacturer and the One Observed During Testing for the Hydrotube to Produce the Required Hydrogen Flow Rate. 33

Table 8. Comparison Between the Power Inputs and Power Outputs Used to Calculate the Theoretical and Actual Efficiency for the Prototype System.....40

Table 9. Comparison of Theoretical Performance and Efficiency for Prototype Systems Using Different PEM Fuel Cells: PEM-H100, PEM-H1000 and PEM-H5000.....41

Table 10. Comparison of System Efficiency for Various Power Generation Systems. Adapted from [29]. 41

Table 11. Molar Composition of Water. Adapted from [30].....62

THIS PAGE INTENTIONALLY LEFT BLANK

LIST OF ACRONYMS AND ABBREVIATIONS

AC	Alternate Current
AEMR	Annual Energy Management Report
AFC	Alkaline Fuel Cell
Epact 2005	Energy Policy Act of 2005
DC	Direct Current
DMFC	Direct Methanol Fuel Cell
DOD	Department of Defense
DOE	Department of Energy
ESTEP	Energy System Technology Evaluation Program
FOB	Forward Operating Base
FY	Fiscal Year
H_2O	Water
HESM	Hybrid Energy Storage Module
HT	HydroTube
HVAC	Heating, Ventilating and Air Conditioning
I_{mp}	Max Power Current
kW	Kilowatt
LOHC	Liquid Organic Hydrogen Carrier
NAVFAC	Naval Facilities Engineering Command
NPS	Naval Postgraduate School
MCAGCC	Marine Corps Air Ground Combat Center
MCFC	Molten Carbonate Fuel Cell
MOU	Memorandum of Understanding
OES	Operational Energy Strategy
ONR	Office of Naval Research
PAFC	Phosphoric Acid Fuel Cell
PEM	Proton Exchange Membrane
PFC	PEM Fuel Cell
PEM-H100	PEM Fuel Cell—100 W
PEM-H1000	PEM Fuel Cell—1000 W

PEM-H5000	PEM Fuel Cell—H5000
P_{max}	Max Power
PWM	Pulse-Width Modulator
R&D	Research and Development
RFC	Reversible Fuel Cell
RO	Reverse Osmosis
RSOFC	Reversible Solid Oxide Fuel Cell
SF	Safety Factor
SOFC	Solid Oxide Fuel Cell
SPAWAR	Space and Naval Warfare Systems Command
TB	Terminal Block
U.S.	United States
V	Volts
V_{mp}	Max Power Voltage
W	Watt

ACKNOWLEDGMENTS

First, I would like to thank God for blessing me with the opportunity to accomplish another goal in my life. Second, I would like to give an especial thanks to my wife, Sonimar Villegas, for her constant support throughout this past eighteen months. Her emotional fortitude and complete dedication to our two-year-old son, Angel "Sebi" Aviles, were key to my success.

I would also like to thank Dr. Garth V. Hobson (advisor) and Dr. Anthony J. Gannon (co-advisor) for their engagement and guidance through the entire thesis process. Their enthusiasm and leadership have made me a better engineer and naval officer. Finally, I would like to thank Andrea Holmes and John J. Gibson; their willingness to help and hands-on support allowed me to complete the experimental setup required for this thesis on time.

THIS PAGE INTENTIONALLY LEFT BLANK

I. INTRODUCTION

According to the U.S. Energy Information Administration the United States (U.S.) consumed 28.53 million gigawatt hour (102.71 billion gigajoules) of energy in 2014 [1]. From this total amount of energy, the Department of Defense (DOD) consumed 0.75 percent making them the largest consumer of energy in the country [2]. The DOD has come to the conclusion that the availability and resiliency of energy dictates its capabilities across all operations and installations. This conclusion opened the path to the creation of the DOD energy program, whose main priority is to support the other activities within the department to complete their respective missions [3]. The main focus of this thesis is to develop a concept design and a prototype system capable of increasing and improving the two main energy constraints DOD must overcome to meet future mission requirements, energy availability and resiliency.

The DOD total energy bill in FY2015 was $16.7 billion, separated in two distinct categories: operational energy and installation energy [3]. Operational energy accounted for 77 percent ($12.8 billion) of DOD's energy consumption in FY2015, to include the facets of training, movement and sustainment of troops, contingency bases, and weapons used in operations [3]. The operational energy consumption is constantly changing due to its direct ties to the operational tempo of military forces around the globe. While the consumption dropped about 30 percent from FY2007 through FY2014, mainly due to the drawback of forces from U.S. Central Command, the new developments in weapons platforms and combat capabilities are rapidly increasing the demand for energy [4]. To counteract this increase in demand for energy the DOD developed the Operational Energy Strategy (OES). The 2016 OES presented as a main goal to reduce energy consumption the diversification of energy supplies in order to reduce risk by pursuing the implementation of renewable energy alternatives in contingency bases [4].

Installation energy accounted for 23 percent ($3.9 billion) of DOD's energy consumption in FY2015, to include the energy used across installations, enduring locations and non-tactical vehicles at those locations [3]. The installation energy consumption is more constant than the one for operational energy because it depends on

the 500 installations and nearly 300,000 buildings managed by DOD worldwide [3]. In the 2015 Annual Energy Management Report (AEMR) the DOD energy program identified installations as the most effective conduit to improve the department's overall energy resilience [3]. Increasing the supply of renewable energy and the enhancement of energy resiliency are two of the three main areas the DOD have identified and worked on for the past couple years to minimize the future energy consumption across the installations [3].

The main idea behind this thesis is to emphasize that in order for the DOD to decrease energy consumption across its operations and installations, it must increase the implementation and usage of renewable energy sources. As long as the DOD remains dependent on fossil fuels to accomplish its mission, efficiency improvements to the assets (equipment, weapons platforms, vehicles, building, etc.) will not be enough to effectively decrease the long-term energy consumption. The overall intent of this thesis is to reduce the dependency on fossil fuels across contingency bases and permanent installations by increasing the energy availability and improving their energy resiliency. To do so, the thesis presents the concept design and results for a prototype system capable of generating specific amounts of power by using hydrogen produced with water extracted from an unconventional renewable source, ambient moisture. This will allow the system to operate as a self-sufficient unit once installed.

A. MOTIVATION

Since FY2010, through a Memorandum of Understanding (MOU) the DOD have been working with the Department of Energy (DOE) to develop the energy technologies that most likely will improve the future operational energy performance of the Services. In FY2015, two of the initiatives developed through the MOU were the Hybrid Energy Storage Module (HESM) and the DOE Big Ideas Summit [5]. The HESM is a program focused on developing hybrid energy storage systems capable of storing electrical energy in high densities. During the 2015 summit, two of the big ideas presented were the energy harvesting for forward operating bases (FOB) and development of microgrids [5]. All these new programs and initiatives show the determination DOD has in promoting

research and development (R&D) of topics with potential to reduce the operational energy consumption.

While work toward improvements in operational energy consumption have been initiated within DOD, the decrease to energy consumption across installation energy have been forced upon DOD through various acts and laws. The Energy Policy Act of 2005 (Epact 2005) requires all Federal Agencies to ensure every year after FY2013 no less than 7.5 percent of the electric energy consumed would come from renewable energy [6]. In 10 U.S. Code § 2911 the DOD is required to produce or procure not less than 25 percent of the installation energy from renewable energy sources for every year after FY2025 [7]. Despite having over 1,390 operational renewable energy projects at the end of FY2015, the data presented in the FY2015 AEMR shows only a 3.6 percent of electrical energy is being consumed from renewable energy instead of the 7.5 percent required by Epact 2005 [3]. Additionally, at the end of FY2015 DOD was only able to achieved 12.4 percent in renewable energy procured or consumed of the 25 percent goal by FY2025.

Based on the work the DOD have done in both fronts, operational and installation energy, no one can deny their commitment to reduce their total energy consumption. Unfortunately, despite all the work that have been done toward decreasing energy consumption the data presented in the FY 2015 AEMR shows it has not been enough. This leads to the conclusion that DOD needs to continue investing in new R&D projects targeting improvements in energy resiliency and availability if they want to start meeting the energy mandates in the future. This is why the design concept and prototype system presented in this thesis is not only important and necessary, but also critical for the future of the DOD energy program.

B. OBJECTIVES

The ultimate objective of this thesis is to develop a concept design and a prototype system capable of increasing energy availability and improving energy resiliency through the use of renewable energy sources. The design focuses in the integration of multiple technologies to achieve its objectives. To improve energy

resiliency the design calls for the use of a hydrogen fuel cell to generate electrical power. Unlike other systems, were the hydrogen used by the fuel cell is mainly produced through industrial processes, this system will have the capability of producing its own hydrogen. To produce the hydrogen required by the fuel cell the design incorporates a humidity extraction process and a hydrogen production process into the system. Both of these processes being the key that will allow the system to be self-sufficient once installed. Then to meet the power requirements for each of these processes the design incorporates a reliable renewable energy source into the system. Even though it is not built into the prototype system, the concept design provides the mechanism to reroute the hydrogen produced from the fuel cell to a compression and storage process. The design and implementation of the compression and storage process will be done in future thesis projects. Some of the specific objectives to be accomplished by the concept design and prototype system are:

- Demonstrate the integration of various types of technologies in a single system with one common goal.
- Demonstrate the system can be developed using only commercially available components.
- Demonstrate the system can rely only in the usage of renewable energy sources.
- Demonstrate the system can extract enough water from ambient moisture to produce the adequate rate of hydrogen required by the fuel cell.
- Demonstrate hydrogen fuel cells can be used to generate specific amounts of power.
- Show the system can be scaled up to meet various energy requirements.
- Compare the system performance and efficiency with the ones already established.

C. CHALLENGES

The main challenge faced by the concept design and prototype system presented in this thesis is the integration of several commercially available components into a single process. Some of the specific challenges that have been overcome so far are:

- Quantifying the number of solar panels needed to meet the power demand by the components used in the system while taking in account possible power fluctuations due to environmental conditions.
- Quantifying the number of dehumidification units needed to produce water at an equal or higher rate to the one in which water is being depleted by the hydrogen production process.
- The need to implement a charge controller to drop the voltage provided by the renewable energy source to the voltage range required by other components in the system (hydrogen fuel cell, humidity extraction, hydrogen production).
- The configuration of a new piping system to accommodate the safety requirement that calls for having water storage tanks and hydrogen production unit.
- The integration of a diaphragm pump to increase the hydrogen flow pressure and meet inlet pressure required by the fuel cell.
- The development of a reliable process for data collection across the system components while in operation mode that can produce valid results.

D. LITERATURE REVIEW

One of the first questions that came to mind during the initial stages of this project was if a similar concept design have already been developed and implemented either in the DOD or civilian sector. While doing the research to answer this question it was found that each of the technologies integrated into the concept design have already being implemented across the DOD in one way or another. Renewable energy sources such as wind turbines and solar panels can be found operating in numerous installations across DOD. Humidity extraction from the surroundings is accomplished for the most part through the heating, ventilation and air conditioning (HVAC) systems in every building. The fleet, especially submarines, constantly uses the electrolysis process to produce oxygen and ends up discarding the hydrogen because they have no use for it underwater. Finally, fuel cells have been used since the 1990s as distributed stationary power and backup power in several facilities. Through that same research it was found these technologies have never been integrated into a single design. Two prototype systems with

similar characteristics were presented earlier this year, but they have some distinct differences.

To understand the importance of the work trying to be accomplished by this thesis it is important to understand the maturity state of each technology being implemented in the concept design. The first technology considered is renewable energy source. RenewableEnergyWorld.com recognizes eight major types of renewable energy sources: "solar energy, wind energy, geothermal energy, bioenergy, hydropower, ocean energy hydrogen & fuel cells, and green power" [8]. Out of these eight when people think about renewable energy sources the first thought that comes to mind is solar panels and rightfully so. Even though all these types of renewable energy are being used the most common by far is solar energy. The most common applications in which DOD have implemented solar energy is through the installation of several solar farms, the installation of solar panel systems in the rooftop of hundreds of buildings, and the installation of solar powered light poles and signs. Over the years much money have been invested in R&D surrounding this technology that many people already call it a mature technology.

The second technology is the dehumidification or water extraction from the surroundings. Just like solar energy, this technology is also considered a mature technology. The process of extracting water from the surroundings is mainly used to achieve a specific level of comfort in any or all of the following: office spaces, houses, warehouses, etc. This is normally accomplished, as mentioned earlier through the HVAC system. Other ways besides the HVAC systems that people use to lower the humidity in their surroundings is by the use of portable dehumidification units. These units come in many sizes depending on the user need and preferences. They tended to be fairly inexpensive, achieve good results, and are easy to install and operate.

The third technology is hydrogen production through the electrolysis process. Even though the use of electrolysis is very common throughout the fleet as an oxygen generator, this is not so commonly used for hydrogen production. The most common process commercially use to produce hydrogen is natural gas reforming, which accounts for 95 percent of the hydrogen used in the U.S. [9]. The main setback for electrolysis is the amount of power required by the process to disassociate

water into oxygen and hydrogen. Currently, DOE in conjunction with civilian partners is pushing the R&D process to improve the overall performance of the electrolysis process in an attempt to make it a mainstream hydrogen production process. Figure 1 shows the research based projections DOE has made regarding future capacities for different types of hydrogen production plants [10]. In this figure the use of renewable energy sources to produce hydrogen at commercially viable amounts through the electrolysis process is projected as a mid-term / long-term goal.

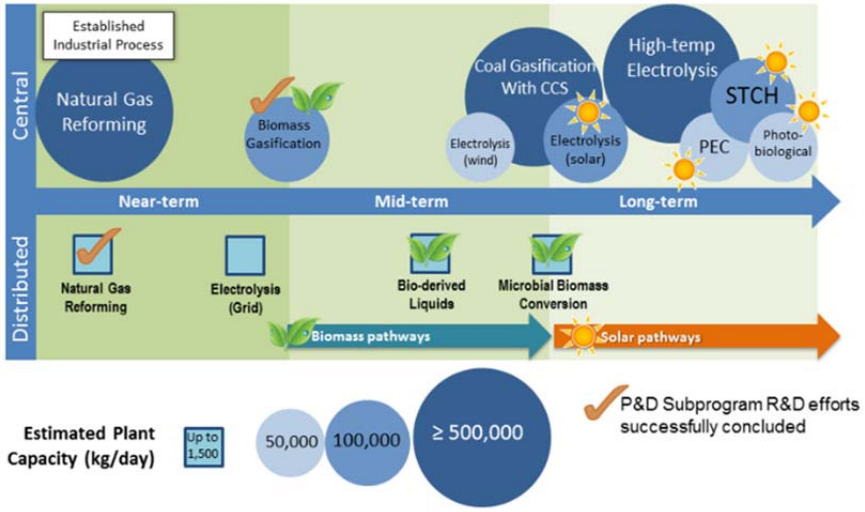

Figure 1. DOE Projections for Capacities of Hydrogen Production Plants.
Source: [10].

The fourth and last technology implemented in design is the fuel cell technology. This technology is not new to the DOD, fuel cells have been installed and tested across DOD installations since the 1990s. One of the first projects attempting to use fuel cells as a form of distributed stationary power was a 200 kilowatt (kW) phosphoric acid fuel cell (PAFC) installed and operated from 1995 to 2000 at the Marine Corps Air Ground Combat Center (MCAGCC) Twenty-Nine Palms. The system relied in city water as the hydrogen source and grid power to operate. The project was decommissioned in 2000 leaving DOD with three main lessons learned. First, water in the Southwest region of the United States is not a suitable source of hydrogen unless it is chemically treated and passed through a reverse osmosis process to extract all the unnecessary particles. Second, a reduction of the

fuel cell energy demand reduction is needed since the energy savings obtained by this project were less than anticipated. Third, average costs to generate electricity by the system were similar to the costs incurred by purchasing electricity from the major electric company at the time. This means average operating and maintenance costs must be decreased in order to improve the viability of fuel cells in future projects [11].

Another way in which DOD have used fuel cell technology is in backup power systems. By the end of FY2011, DOD in a partnership agreement with the DOE installed 18 fuel cell backup power systems across eight military installations. The intent behind the project was to test the fuel cell performance during real life conditions, identify potential technical improvements to be made by the fuel cell manufacturers and determine the reliability of using fuel cells as emergency backup power systems [12]. Data found for the system installed in Fort Jackson, SC shows in 2011 alone 102 operational hours were saved thanks to the fuel cell backup power system during a series of unscheduled power outages [13]. This proves fuel cell technology is a viable alternative for backup power systems and can be used to improve the energy resiliency of installations. Similar to the electrolysis process, the DOE is pushing the R&D process of fuel cell integration into backup power systems. Table 1 explicitly shows the technical goals DOE wants to accomplish with these systems by FY2020 [14].

Table 1. DOE Technical Targets for Fuel Cell Backup Power Systems. Adapted from [14].

Characteristic	Units	2015 Status	2020 Targets
Lifetime	years	10	15
Durability	hours	8,000	10,000
Energy efficiency	%	50	60
Mean time between failures	years	5	5
Ambient temperature range	°C	-20 to 40	-50 to 50
Noise	dB at 1 m	65	60
Start-up time	seconds	60	15
Availability	%	99.7	96.3
Equipment cost	$/kW	6,100	1,000
Annual maintenance cost	$/kW	30	20
Annualized total cost of ownership	$/kW	500	200

Prior to FY2016 no evidence was found showing a prototype system that effectively integrated all these technologies. Until March 2016 when the Naval Facilities Engineering Command (NAVFAC) and Boeing completed the development of a reversible solid oxide fuel cell (RSOFC); which is so far the most complex system developed by any DOD component and the first one to combine most of the technologies presented earlier. The system integrates renewable energy sources, electrolysis process and fuel cell technology to generate power. It consist of a two-step process; the first step is to produce hydrogen by relying on renewable energy sources, produced by a major electric power company and delivered through the grid, to process sea water via reverse osmosis (RO) and disassociating this water into oxygen and hydrogen by electrolysis. The second step generates power by feeding hydrogen to solid oxide fuel cell (SOFC). The system is capable of producing from 50 to 250 kW of power [15]. The two main differences between this prototype system and the one presented in this thesis are the need to treat the water prior to the hydrogen production, and the reliance in the grid to obtain enough renewable energy sources to operate.

The second and latest prototype system developed by a DOD component that combines most of the technologies presented earlier was presented in July 2016 during the annual meeting of the Energy System Technology Evaluation Program (ESTEP). The system was developed by the Space and Naval Warfare Systems Command (SPAWAR) and it integrates the electrolysis process and fuel cell technology to generate power. It relies in a proton exchange membrane (PEM) fuel cell to generate 100 watts (W) of power and a polymer electrolyte membrane electrolyzer to produce the hydrogen required by the PEM fuel cell to generate power. According to the engineers the system is capable of simultaneously producing hydrogen and generate power with an overall efficiency of 38 percent. Specific details regarding the method used to calculate the system efficiency are not available. The main challenge being faced by the engineers working in this prototype system is the ability to produce the deionized water require by the polymer electrolyte membrane electrolyzer to produce hydrogen [16]. Except for the process utilized to produce a viable source of water, the system developed by SPAWAR is

similar to the one presented in this thesis were an electrolyzer is used to produce hydrogen and a PEM fuel cell to generate power.

In the civilian sector, besides all the work currently being made to assist the DOD to meet the energy mandates, the main focus in each of these technologies is to continue advancing the improvement of performance and manufacturing processes. During research only one company was found focusing its efforts in the development of an integrated system similar to the one presented in this thesis and it was Hydrogenious Technologies. This German company has developed a unique five step process to produced power using hydrogen as the energy carrier. First, the hydrogen is produced by using either renewable energy sources via electrolysis or industrial process such as steam reforming. Second, the hydrogen goes through a hydrogenation process were its molecules are chemically bonded to a liquid carrier via a catalytic reaction. Third, the liquid organic hydrogen carrier (LOHC) is used as the storage medium to transport the hydrogen to its final destination. Fourth, the hydrogen goes through a dehydrogenation process to separate the hydrogen from the liquid carrier. Fifth, the hydrogen is fed to a fuel cell to generate power [17]. The company's main breakthrough in this process was the LOHC or hydrogen storage technology. This process alone can solve many of the issues currently holding back the use of hydrogen as a viable alternative to store large amounts of energy. What is still unclear from the information provided is the process utilized to produce the water required for the hydrogen production via electrolysis using renewable energy sources.

II. CONCEPT DESIGN AND EQUIPMENT

In FY13 the Office of Naval Research (ONR) founded ESTEP with the intent of evaluating and testing new alternative energy technologies [18]. ESTEP utilizes Navy and Marine Corps facilities as test sites to implement the pre-commercial and commercial technologies acquired primarily in the open market. Three of the main partners participating in this program are the Naval Postgraduate School (NPS), NAVFAC and SPAWAR. The prototype system presented in this thesis is being develop by NPS in a Navy facility, the design as a whole can be considered a new alternative technology, and all the components used are commercially available. All these facts fall within ESTEP's primary purposes making this concept design and prototype system a prime candidate to be adopted by their program.

A. CONCEPT DESIGN

The ultimate goal for the prototype system and the constraints limiting the concept design were the main drivers during the design process. The ultimate goal was to generate 100 W of power using hydrogen as the energy source. The concept design was mainly limited by three constraints. The first two constraints were: all hydrogen produced by the system must come from a renewable source, and any power requirements for the system must be met using a renewable energy source. The third constraint followed one of ESTEPs main philosophies, to maximize the usage of commercially available technologies, or in this case all components incorporated into the system must be readily available. The final concept design developed for the prototype system is compose of a balanced mix of mature and developing technologies. The four main components implemented in the system are solar cells (solar panels), dehumidification units, an electrolytic cell and a hydrogen fuel cell. Figure 2 and Appendix A shows a diagram depicting the main components implemented in the concept design for the prototype system presented in this thesis.

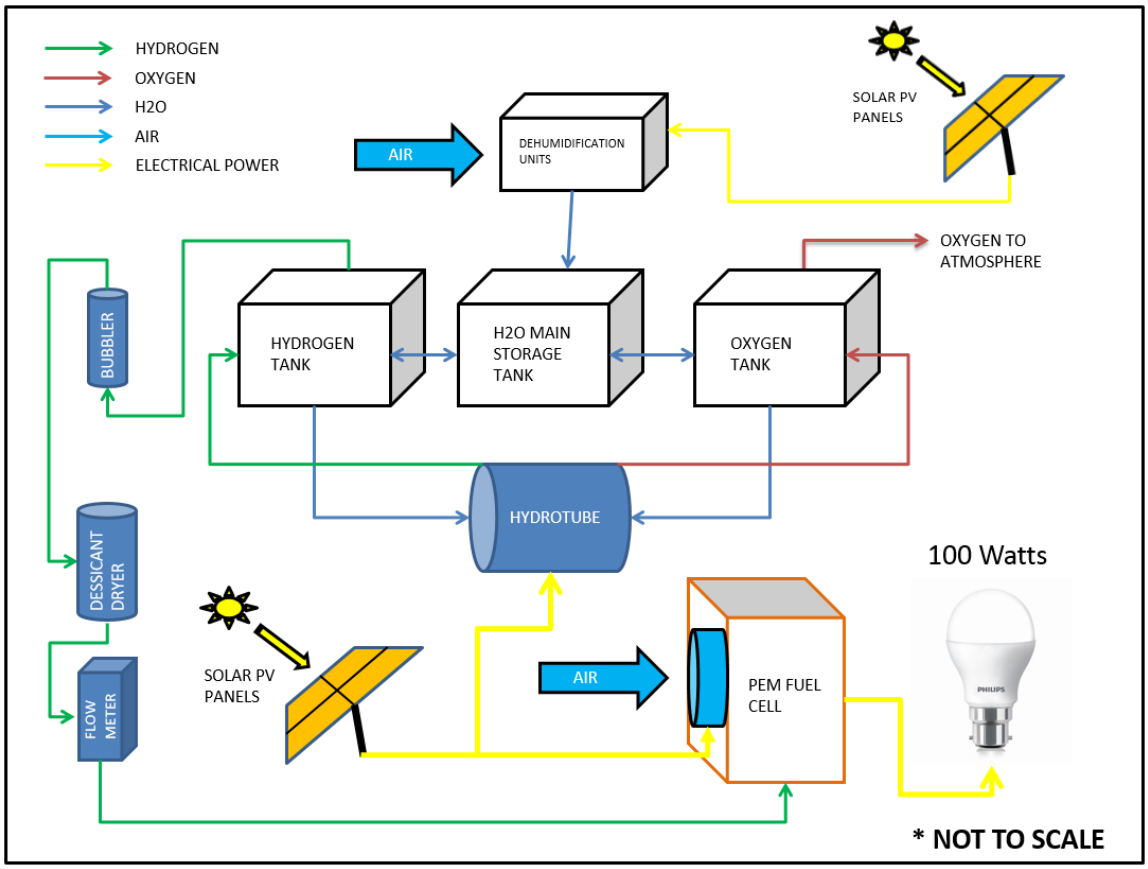

Figure 2. Concept Design Diagram.

The system's operation can be summarized in four steps. The first step is to use solar panels as the energy source needed to operate a series of dehumidification units to extract and store water from the moisture in the ambient. The second step is to use the solar panels as the energy source to disassociate water into hydrogen and oxygen with an electrolytic cell (HydroTube). In the third step hydrogen is channeled through a series of drying mechanisms before it arrives to the fuel cell and the oxygen is discarded back into the ambient. In the fourth and final step the hydrogen and a small amount of energy from the solar panels is passed through the fuel cell to generate a specific amount of useful power.

B. SELECTION PROCESS FOR SYSTEM COMPONENTS

One of the constraints limiting the concept design was the implementation of only commercially available components. The equipment integrated in the concept design and installed in the prototype system was categorized into four categories: renewable energy source, water source, hydrogen production, and fuel cell.

1. Renewable Energy Source

As per the constraints established earlier renewable energy sources must be used to meet the power requirements by the equipment installed in the system. Renewable energy is, "energy that is generated from natural processes that are continuously replenished" [19], and is not derived from fossil or nuclear fuel. It is also known as a source of energy that cannot be depleted and is constantly regenerated. For purposes of this thesis the renewable energy source considered was solar energy. The equipment require to implement these technologies is commercially available and easy to install. Their power outputs have a very wide range; capacities can go from a single watt to hundreds of gigawatts of power. The system presented is designed to run on less than 1 kW of power. The major downside to solar energy sources is power output intermittency, mainly due to daily cycling, but also due to cloud cover. The location in which the system is intended to be installed and operate has more sunny days than windy days; therefore an array of solar panels can provide a reliable amount of power during daytime operation.

2. Water Source

As mentioned earlier one of the constraints for the concept design was to produce the hydrogen required by the fuel cell from a renewable source. The most common renewable source used to produce hydrogen is water, and the most common renewable sources of water are oceans, rivers, rain, and snow. Unfortunately each of these potential sources carries a unique set of challenges discarding them from being considered as the renewable source of water for this system. The water from the ocean must be pumped and chemically treated prior it being suitable for hydrogen production. The water from the rivers, just like the one from the oceans, must be pumped and chemically treated prior it being suitable for hydrogen extraction; additionally rivers in certain areas tend to dried

out during certain seasons of the year and during heavy droughts. Rain events in most parts of the U.S. are not a daily occurrence, therefore it cannot be considered as a reliable and constant source of water. Finally, the water from snow is only available during specific seasons and certain geographical locations, making it also an unreliable and not constant source of water. To solve the problem of a regenerative source for the water required to produce hydrogen a more uncommon source was considered and selected; moisture from the air. This renewable source of water does not' need to be treated and except for dry environments it is readily available year round. The most commonly used equipment to extract moisture from the air are dehumidification units.

The three main types of commercially available dehumidification units are the compressor dehumidifiers, desiccant dehumidifier and the thermo-electric dehumidifier. The compressor dehumidifier works by pumping air from a reservoir in through an evaporator (cold surface) causing the moisture in the air to condensate. The air is then passed through a condenser (hot surface) to warm the air before sending it back to the reservoir. In this case the compressor is used to drop the temperature of the refrigerant keeping the evaporator surface cold. A desiccant dehumidifier works by pumping air from a reservoir and passing it through a rotating wheel whose surface is made of desiccant material, typically zeolite. The desiccant material absorbs the moisture from the air. Then the air is heated and passed through the opposite site of the wheel removing the moisture from the desiccant material before it is send back into the reservoir. Finally, the thermo-electric dehumidifier works by passing air over the cold side of a series of thermoelectric units causing the moisture in the air to condensate. The thermoelectric units are based on Peltier technology. This technology simply passes current through a group of thermocouples connected in series forcing one side of the unit to be hot and the other to be cold. The temperature in each side of the unit depends directly in the amount of current passed through the thermocouples.

The following is a quick comparison for the three types of dehumidification units. They are all capable of operating across the temperature range (5-27 °C) required by the system. The compressor and desiccant dehumidifier have moving parts and chemical components that need periodic maintenance. The thermo-electric dehumidifier has no

moving parts, no chemicals and barely requires any kind of maintenance. The desiccant dehumidifier has the best ability to control the humidity levels in a room. Also the desiccant dehumidifier use the least amount of energy to extract the same amount of moisture from the air. The compressor dehumidifier is the least environmentally friendly of the three since it is the only one that releases greenhouse gases into the atmosphere [20, 21]. In the end no moving parts and virtually no maintenance required was the factor used to select the thermo-electric dehumidification units to be the ones implemented in this system.

3. Hydrogen Production

According to the DOE in the U.S. hydrogen is mainly produced by four processes. First, the thermochemical process which uses heat and chemical reactions to released hydrogen from fossil fuels and biomass. Natural gas reforming is an example of this process and in the U.S. it accounts for 95 percent of the hydrogen production. Second, the electrolytic process that uses energy to dissociate water into hydrogen and oxygen. Third, the direct solar water splitting process which uses light energy to also dissociate water into hydrogen and oxygen. Fourth, the biological process that uses microorganisms such as algae to produce hydrogen via biological reactions using sun light or organic matter [9]. Since the hydrogen in the system must be produced from a renewable source, in this case water, the only processes considered during the concept design process were the electrolytic process and the direct solar water splitting process. From these options the electrolytic process was selected mainly because there is not a small scale commercially available option that uses light energy to produce a hydrogen flow rate suitable for the system.

The electrolytic process, also known as electrolysis, can be achieved by using one of the following pieces of equipment: a polymer electrolyte membrane electrolyzer, an alkaline electrolyzer or a solid oxide electrolyzer. They all work similarly, meaning they consist of an anode and a cathode separated by an electrolyte material. The oxygen is produced in the anode and the hydrogen in the cathode. The overarching chemistry that takes place to produce the oxygen and hydrogen in all cases is the following [22]:

- Anode Reaction: $2H_2O\ (l) \rightarrow O_2\ (g) + 4H^+\ (aq) + 4e^-$
- Cathode Reaction: $2H_2O\ (l) + 2e^- \rightarrow H_2\ (g) + 2OH^-\ (aq)$

The main difference among the three electrolyzers is the type of electrolyte used by the manufactures to diffuse ions across the water and improved the rate at which each of the products is produced. Table 2 presents a comparison among the three electrolyzers with respect to electrolyte type, chemical transport across the electrolyte and operating temperature [22].

Table 2. Comparison Among Electrolyzers Used in the Electrolytic Process. Adapted from [22].

Type of Electrolyzer	Type of Electrolyte	Chemical Transported Across Electrolyte	Operating Temperature Range (°C)
Polymer Electrolyte Membrane	Solid Specialty Plastic Material	Hydrogen Ions (H^+)	70-90
Alkaline	Potassium Hydroxide	Hydroxide Ions (OH^+)	100-150
Solid Oxide	Solid Ceramic	Oxygen Ions (O^{2-})	700-800

From the three types of electrolyzers the solid oxide alternative was discarded first due to its operating temperature range. The incremental cost and safety measures required when working with a piece of equipment that operates at such high temperatures is not worth it for the actual amount of hydrogen needed by the system. The electrolyte utilize by the polymer electrolyte membrane electrolyzer is made out of a solid specialty plastic material commonly composed of exotic components such as iridium and platinum. The use of these exotic components in the electrolyte causes the polymer electrolyte membrane electrolyzer to be on average eight times more expensive that the alkaline electrolyzer for the same desire hydrogen flowrate. This was the main reason why the alkaline electrolyzer was selected to be the component implemented in the system for the hydrogen production.

4. Fuel Cell

According to the DOE, "Hydrogen is an energy carrier, not an energy source" [23]. In order to convert the energy carried within a hydrogen molecule into useful energy a fuel cell is used. Fuel cells can be more efficient than combustion engines, reaching efficiencies of up to 60 percent [24]. The fuel cell is composed of two electrodes, a negative anode and a positive cathode, divided by an electrolyte. The fuel, in this case hydrogen, is fed through the anode and oxygen is fed through the cathode. The electrolyte between the electrodes acts as a barrier allowing only the protons within the hydrogen molecules to go through and forces the electrons to flow through an external circuit in order to reach the cathode. The flow of electrons across the external circuit is what creates the flow of electricity as useful energy. The only products of this chemical process are water and heat.

There are seven types of fuel cells currently being used by the industry, the proton exchange membrane (PEM) fuel cell, direct methanol fuel cell (DMFC), alkaline fuel cell (AFC), phosphoric acid fuel cell (PAFC), molten carbonate fuel cell (MCFC), solid oxide fuel cell (SOFC), and the reversible fuel cell (RFC) [25]. The DMFC was discarded right away because its fuel requirement is methanol and the fuel used by this system is hydrogen. The RFC was also discarded because just like the PEM electrolyzer it relies on a solid membrane made out of exotic materials like platinum and iridium to function as the electrolyte. This type of electrolyte increases too much the cost of the fuel cell making it not suitable to be considered as an alternative. Appendix C contains a table that compares the other five types of fuel cells with respect to electrolyte type, operating temperature, typical power output, electrical efficiency, applications, advantages and challenges [26].

The selection of a suitable fuel cell alternative for the system presented in this thesis out of the remaining five fuel was fairly simple. The MCFC and SOFC fuel cells were discarded mainly due to their operating temperatures, 600–700 °C and 500–1000 °C respectively. The incremental cost and safety measures required when working with a piece of equipment that operates at such high temperatures is not worth the amount of energy being produced by this system. Then the AFC and PAFC fuel cells were discarded

mainly for their typical power outputs, 1–100 kW and 5–400 kW respectively. A fuel cell using one of these two concepts and capable of producing less than 1 kW is not readily available in the market, therefore it must have to be specially made for this system not meeting one of the main design constraints established earlier. This leaves the PEM fuel cell as the only viable alternative to be implemented in the concept design for the prototype system presented in this thesis. Figure 3 shows an operating diagram for a PEM fuel cell.

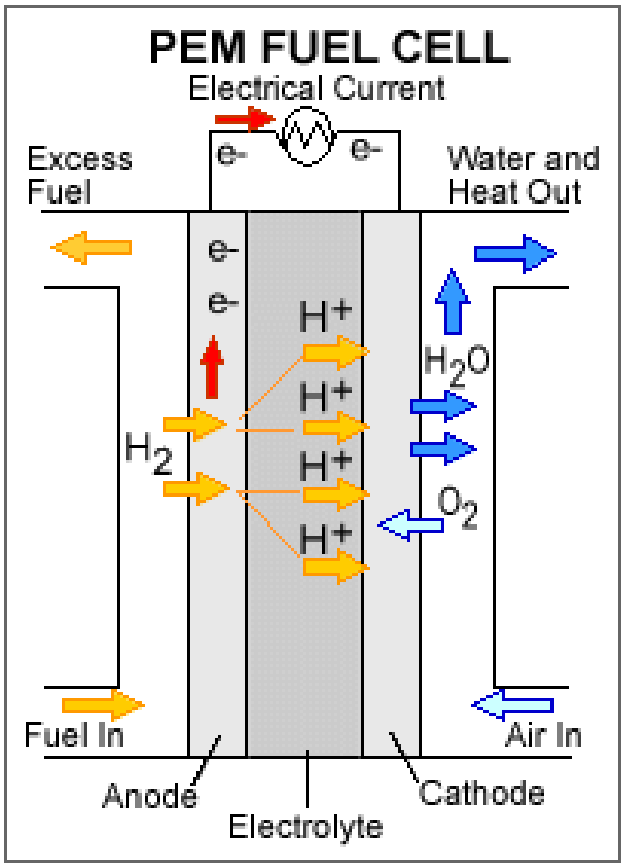

Figure 3. Operating Diagram of a PEM fuel cell [25].

III. EQUIPMENT AND SYSTEM CONFIGURATION

A. SOLAR PANELS

To operate the system at full capacity a theoretical amount of 741.5 W of power is required. This power requirement was obtained by adding up the power requirements for each of the components used in the system. The solar panels selected for the system are part of the OPTimus Series (PV model type: OPT270-60-4-1B0) manufactured by Suniva. Each panel is capable of producing a max power output (P_{max}) of 270 W at a max power current (I_{mp}) of 8.70 ampere (Amps), and a max power voltage (V_{mp}) of 31.0 volts (V). Refer to Appendix D for more specifications regarding the solar panels. Based in these specification the system only needs three solar panels to operate at full capacity. Unfortunately, the power production of solar panels fluctuates constantly depending on environmental conditions. To account for these potential fluctuations in power production three additional solar panels were added to the design. The final configuration used in the system was an array of six solar panels with a total Pmax of 1,620 W. Figure 4 shows the array of solar panels used to operate the system.

Figure 4. Array of Solar Panels.

B. COMBINER BOX, CHARGE CONTROLLER, BREAKER PANEL AND BATTERIES

To manage the power produced by the solar panels and ensure the power distribution throughout the system is done properly a combiner box, charge controller, breaker panel and two batteries were added to the design. The main function for the combiner box is to connect the solar panels in a parallel configuration prior to the charge controller. The combiner box installed in the system is manufactured by Image Instruments. It is a pre-wired, 6-string, fused solar combiner box. It is weatherproof and continuous duty rated at 600 Vdc. It also has six input circuits pre-wired with MC4 connectors. The max current per input circuit is 15 Amps and the max total direct current (DC) output current is 90 Amps. Figure 5 shows the combiner box external connections and internal configuration.

Figure 5. Combiner Box Wiring Configurations.

From the combiner box the power is routed to the charge controller, which main function is to drop the voltage input from the solar panels (31 V_{mp}) to the voltage range (12-14 V) required by main components across the system. The charge controller installed in the system is part of the Classic Series (model: Classic 150) manufactured by Midnight Solar. It has an operating voltage of 150 V and a max current output of 96

Amps. It is capable of operating in various maximum power point tracking (MPPT) modes such as solar, wind and hydro, and it can also operate in battery systems with voltage configuration ranging from 12 to 72 V. Figure 6 shows the charge controller and its internal configuration.

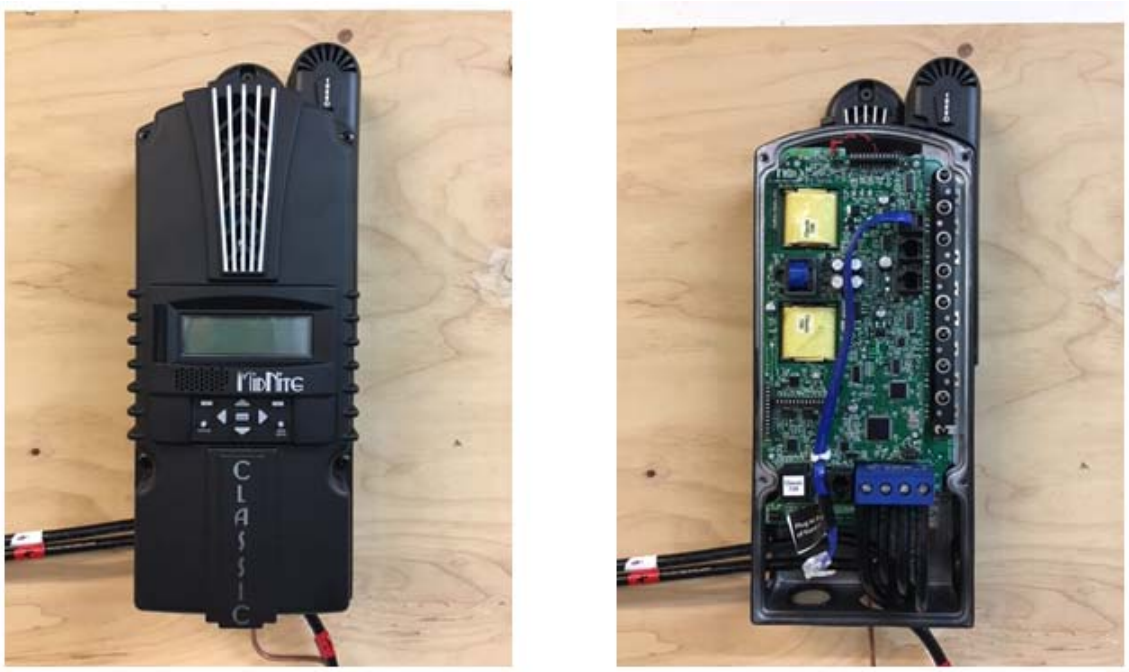

Figure 6. Charge Controller Wiring Configurations.

After the incoming voltage from the solar panels is dropped to the proper range by the charge controller is then routed to a breaker panel. The purpose for the breaker panel is to distribute power to the components in the system and to limit the maximum amount of amperage drawn by each of these components. The breaker panel installed in the system is manufacture by Midnite Solar. It was modified to meet the requirements of this particular system. The breaker panel consists of a shunt to protect the system components from potential power surges. It has four breakers limiting the amperage provided to the system. An 80 Amp breaker for the whole system, a 30 Amp breaker for the dehumidification units, a 40 Amp breaker for the electrolytic cell and a 15 Amp breaker for the fuel cell. It also has a negative and positive terminal block used to route current across the charge controller, batteries and system components. Figure 7 shows a detailed

view of the breaker panel and its wiring configuration. Appendix E shows a more detail description of the wiring configuration inside the breaker panel.

Figure 7. Breaker Panel Wiring Configurations.

Even though the array of solar panels installed in the system can provide enough power to operate all components to their maximum capacity the charge controller requires a power reading in the system side to initiate operations. To meet this requirement two batteries in a parallel configuration were connected to the system. The batteries are part of the Marine/Rv Series (model: SRM-27) manufactured by Interstate Batteries. They are both deep cycle and rated for 12 V. Figure 8 shows the batteries used in the system and their connection to the breaker panel. Appendix F shows a more detailed view of the connections in the charge controller and breaker panel. Then, Figure 9 and Appendix G shows the one line diagram for the complete system.

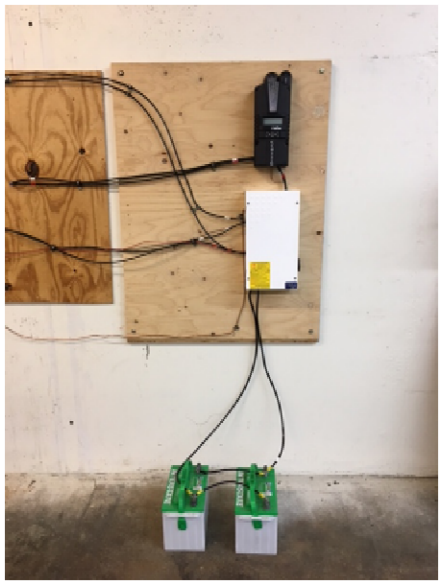

Figure 8. Batteries, Breaker Panel and Charge Controller Wiring Configuration.

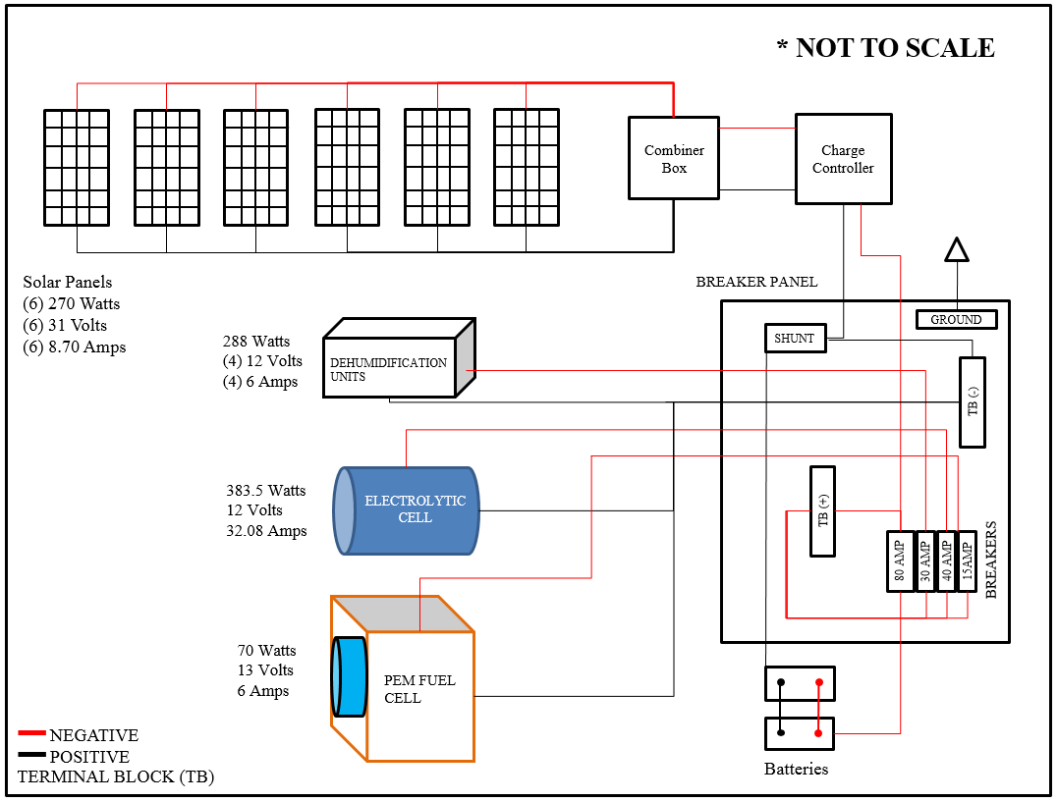

Figure 9. System One Line Diagram.

C. DEHUMIDIFICATION UNITS AND STORAGE TANKS

According to the calculations presented in Appendix H the PEM fuel cell requires a hydrogen flow rate of 2.17 x 10^{-5} cubic meters per second (1.3 standard liters per minute, slpm) to generate 100 W of power. To produce a hydrogen flow rate of 2.17 x 10^{-5} cubic meters per second (1.3 slpm) the electrolytic cell requires a water flow rate of 1.57 x 10^{-8} cubic meters per second (9.44 x 10^{-4} liters per minute, lpm). This water flow rate is equal to 1,303 grams (45.97 ounces, oz) per day (1 day = 24 hours). The dehumidification unit implemented in the design is part of the thermo-electric dehumidifier series (model: IVADM45) manufactured by Ivation. The unit uses Peltier technology to extract the moisture out of the air. The unit also has a water extraction capacity of 709 grams (25 oz) per day and 1,928 grams (68 oz) water reservoir. For continuous operation the unit requires 72 W of power. Based on the unit specifications two units would meet the water flow rate required by the electrolytic cell, but to prevent any unforeseen malfunction or lack in water extraction from a total of four units were installed in the system. This array of four dehumidification units have a total water extraction capacity of 2,835 grams (100 oz) per day with a continuous power requirement of 288 W. Figure 10 shows the setup for the dehumidification units implemented in the system.

Figure 10. Dehumidification Units Configuration.

After the water is extracted by the dehumidification units it is transported by gravity through a piping system to a central storage tank. Then the water is further divided into two additional storage tanks that served as reservoirs for the electrolytic cell. Figure 11 shows the storage tanks configuration, including the HydroTube to be described in the following section.

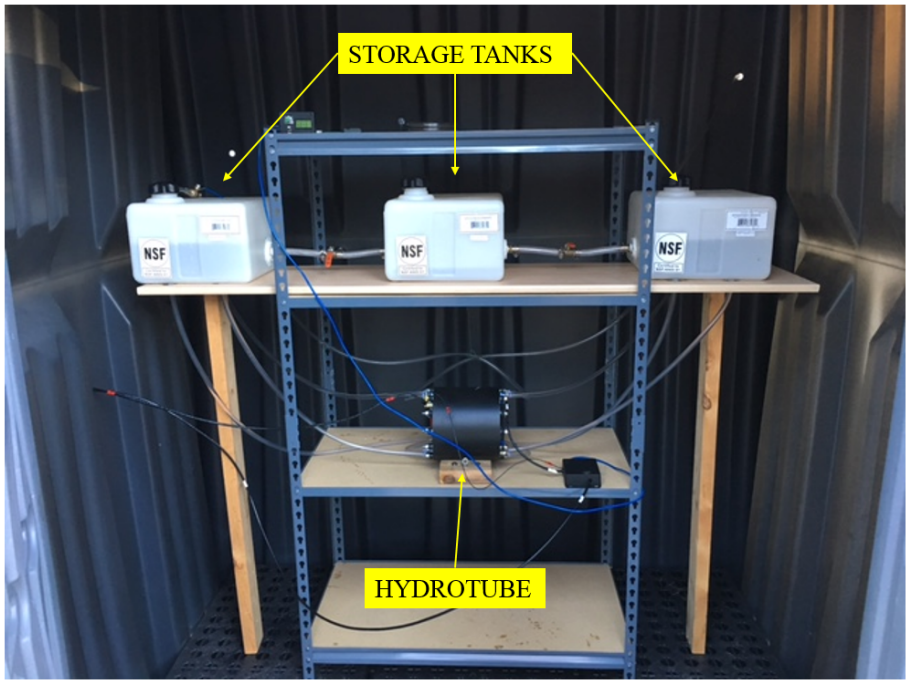

Figure 11. Storage Tanks and HydroTube Configuration.

D. ELECTROLYTIC CELL

As it was previously stated the PEM fuel cell requires a hydrogen flow rate of 2.17 x 10^{-5} cubic meter per second (1.3 slpm) to generate 100 W of power. To meet this requirement an electrolytic cell with a capacity to produce a maximum hydrogen flow rate of 2.83 x 10^{-5} cubic meter per second (1.7 slpm) was installed in the system. This particular cell is called a HydroTube and is part of the P Series (model: HT5-804) manufactured by Hybrid Hydrotech. The HydroTube operation is based in the concept of electrolysis. The HydroTube is rated to operate within a voltage range of 12 to 14 V. This specific unit consists of 20 plates made out of 316L stainless steel and a nominal

diameter of 20 centimeters (8 inches) [27, 28]. To control the DC current flowing through the electrolytic cell an external pulse-width modulator (PWM) was added to the system. The ability to control the DC current applied at any given time enables the user to control the hydrogen flow rate produce by the electrolytic cell minimizing any waste of unused hydrogen by the fuel cell. Figure 12 shows the configuration for the HydroTube and PWM.

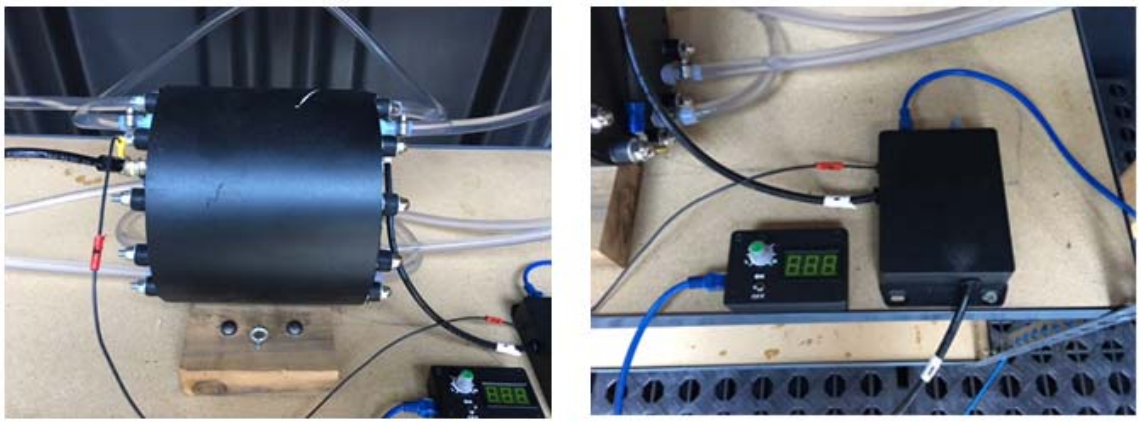

Figure 12. HydroTube and PWM Configuration.

After the water is disassociated into oxygen and hydrogen by the electrolytic cell and stored in the storage tanks (Fig. 11), the oxygen is discarded back into the atmosphere and the hydrogen is routed to the fuel cell. Prior flowing to the fuel cell the hydrogen under-goes a two-step process that ensures a high quality gas is fed to the fuel cell. The first step is to pass the hydrogen through a bubbler. The bubbler has two functions: cleans the hydrogen of any possible electrolyte residue that might have come through the piping system and acts as a safety barrier. It has in the top a flash port that prevents any possible hydrogen combustion at the end of the line from reaching the hydrogen main storage tank by the electrolytic cell. The second step is to dry the hydrogen by passing it through a desiccant dryer, which contains a series of beads that will extract the unwanted moisture from the gas. This is a necessary step since dried hydrogen is one of the specifications for the fuel cell. At the end of this process the hydrogen flows to a T that provides two possible routes for the gas. The main route

explored in this thesis is feeding the fuel cell to generate power. The other route in this thesis was used to discard the hydrogen when the fuel cell was not operation, but in future projects it will be use to route the hydrogen to a compression and secondary storage process. Figure 13 shows the configuration of the bubbler and dryer in the system prior to the fuel cell.

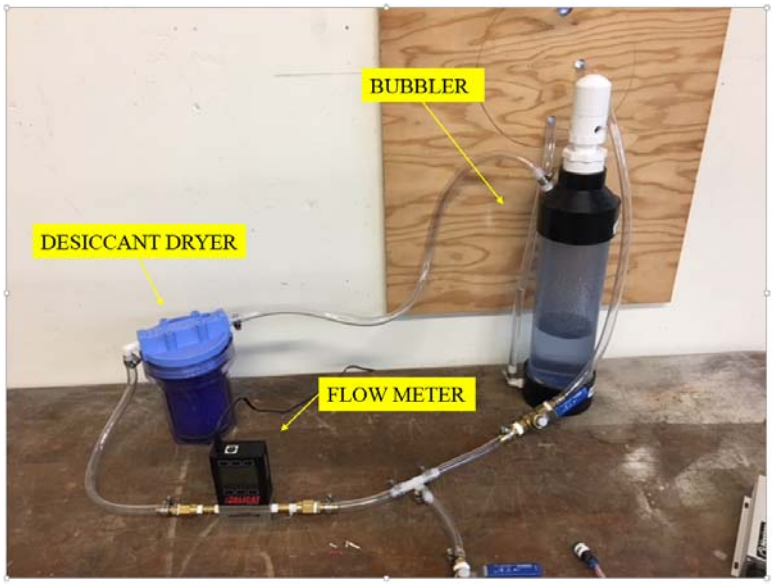

Figure 13. Bubbler, Desiccant Dryer and Flow Meter Piping Configuration.

E. PEM FUEL CELLS

The final step in the prototype system is to generate power by feeding hydrogen to a PEM fuel cell. The system is designed to generate 100 W of power. To meet this design parameter a PEM fuel cell with a max power output of 100 W was selected for the system. The PEM fuel cell is part of the H-Series (model: FCS-C100 or H-100) manufactured by Horizon Fuel Cell Technologies. The fuel cell relies in air for self-humidification and oxygen. It requires an external power source of 70 W to operate. It also requires the hydrogen fed into the unit to be at a gage pressure of 0.45-0.55 bar, and a hydrogen flow rate of 2.17×10^{-5} cubic meter per second (1.3 slpm). Refer to Appendix I (Figure 21 through Figure 23) for more information regarding the technical

specifications, one line configuration and performance characteristics of the H-100 PEM fuel cell. Figure 14 shows the configuration of the H-100 PEM fuel cell.

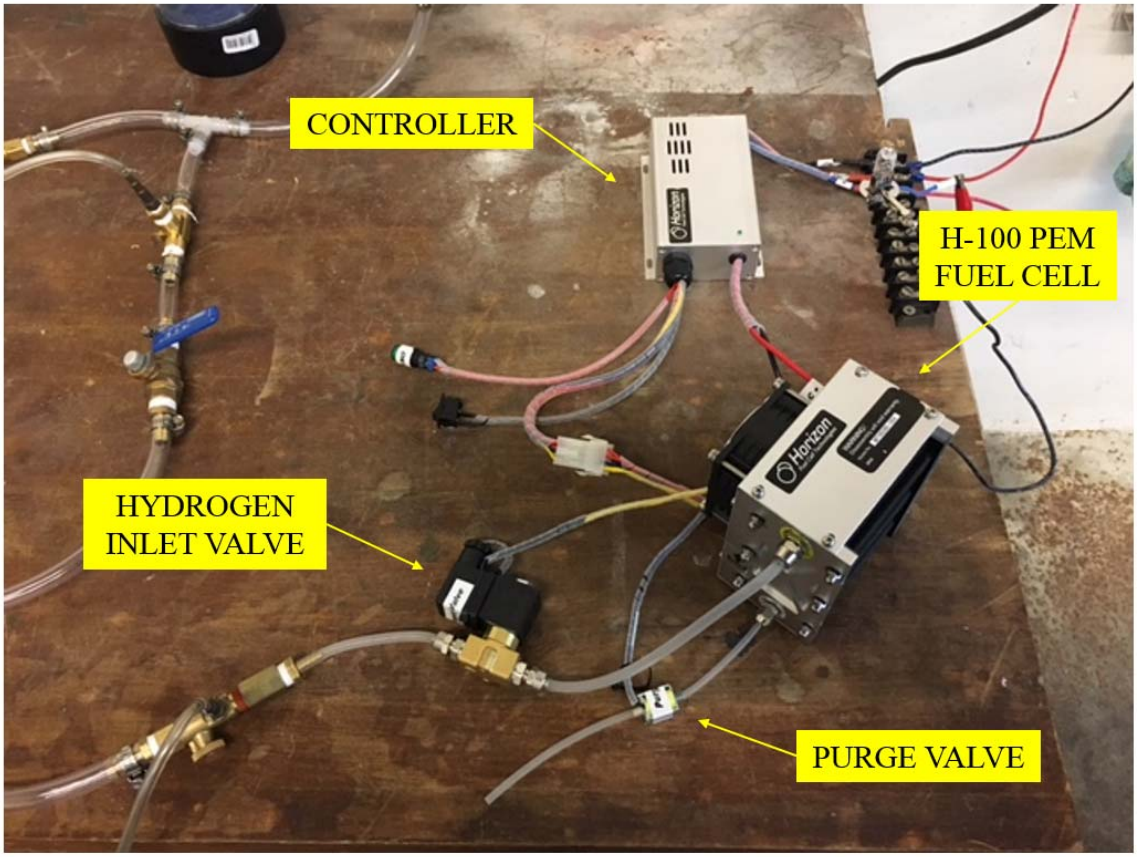

Figure 14. H-100 PEM Fuel Cell Configuration.

IV. OBSERVATIONS AND RESULTS

A. COMPONENTS PERFORMANCE

1. Solar Panels Performance

The array of solar panels installed in the prototype system was found to produce enough power to simultaneously operate the various components across the system. The system was operated and tested multiple times through October 2016, and the total power requirement for the components in the system was on average 556 W. Table 3 shows the average power requirement for each of the components installed in the system.

Table 3. Average Power Requirement for the Components in the System.

Component	Power Requirement (W)
Dehumidification Units (4)	274
Electrolytic Cell	212
PEM Fuel Cell	70
Total	556

It was also found during the month of testing that the location were the array of solar panels have been installed was inadequate. A tree line located right in front of the solar panels obstructed the sun light for most of the time during the day. Due to this obstruction most of the tests were performed either early in the morning or late in the afternoon. Neither of these times are favorable for power production by means of solar cells, but they still were capable of producing the total power required by the system. To increase sun light availability throughout the day in the next stage of testing the solar panels will be relocated to the rooftop of the building containing the dehumidification units and PEM fuel cell. Figure 15 presents the direction in which sun light was available for power production and the location of the tree line that obstructed most of the sun light throughout the day. It also shows the current and proposed location for the solar panels.

Figure 15. Solar Panels Current and Proposed Location to Improve Sun Light Availability Throughout the Day.

2. Dehumidification Units Performance

The four dehumidification units installed in the prototype system were found to extract less water from ambient moisture than expected. Two distinct tests were performed to validate the water extraction capacity of the dehumidification units. The first test was performed over a 24 hour period of time. The specifications provided by the manufacturer points out that each unit has a daily (24 hrs) capacity for water extraction of 709 grams (25 oz). Four units were installed in the system with the expectation of a total daily water extraction capacity of 2,835 grams (100 oz). The data gathered for the units show on average a combine capacity for water extraction from ambient moisture of 879 grams (31 oz). This combine capacity was 69 percent less than expected. Table 4 shows a comparison of daily water extraction capacity between the expected based on manufacturer specifications and the observed through testing.

Table 4. Comparison of Daily Water Extraction Capacity for the Dehumidification Units.

Source of Data	Time Period- (day / hrs)	Water Extraction Capacity - Dehumidification Units
Manufacturer Specification	1 / 24	2,835 grams (100 oz)
Experimental Data	1 / 24	879 grams (31 oz)

The second test was performed over an eight hour period of time. For calculation purposes in this section of the thesis eight hours constitutes a day of operation instead of the default of 24 hours. This was done to account for the fact that solar power is the only source of power used to operate the components in the system. The calculations presented in Appendix H (A) show a water flow rate requirement for the electrolytic cell of 435 grams (15.33 oz) per day of operation in order to produce the hydrogen flow required by the PEM fuel cell. The data gathered for the units show on average a combine capacity for water extraction through a day of operation of 362 grams (12.75 oz). This combined capacity was 16.81 percent less than the required by the system for eight hours of constant operation. To mitigate the shortfall in the capacity for water extraction by the dehumidification units two more units should be added to the system prior to the start of the next stage of testing. Additionally, the safety factor used to calculate the amount of units required to meet the water volumetric flow requirement in future improvements to this prototype system should be changed from two to three. Appendix H (A) shows the calculations for the number of dehumidification needed by the prototype system. Table 5 shows a comparison between the water flow rate required by the system and the one produced by the four dehumidification units through a day of operation.

Table 5. Comparison of Water Flow Rate Produced by the Dehumidification Units and the Required By the System Over a Day of Operation.

Source of Data	Time Period (day of operation / hrs)	Water Flow Rate (per day of operation)
Appendix H	1 / 8	435 grams (15.33 oz)
Experimental Data	1 / 8	362 grams (12.75 oz)

It was also found during the month of testing that the power required to operate each dehumidification unit on average was 68.5 W, instead of the 72 W specified by the manufacturer. Similarly, the power required to operate all the dehumidification units on average was 274 W, instead of the 288 W specified by the manufacturer. The actual power used by the dehumidification units represent a 4.86 percent decrease in the power requirement for this component and a 1.89 percent decrease in the total power requirement for the system. Table 6 shows a comparison between the power requirement specified by the manufacturer and the one observed during testing for the dehumidification units.

Table 6. Comparison Between Power Requirement Specified By the Manufacturer and the One Observed During Testing for the Dehumidification Units.

Source of Data	Power Requirement (W)
Manufacturer Specification	288
Experimental Data	274

3. Electrolytic Cell Performance

The electrolytic cell (HydroTube) installed in the prototype system was found to require less power than anticipated to produce the hydrogen flow required by the PEM fuel cell. According to the recommendation provided by the manufacturer, the HydroTube should be operated with a power input of 295 W in order to produce a

hydrogen flow rate of 1.67 x 10^{-5} cubic meter per second (1 slpm). The data gathered for the HydroTube shows an average power requirement of 189 W to produce the hydrogen flow rate of 1.67 x 10^{-5} cubic meter per second (1 slpm). The experimental power requirement showed by the HydroTube represents a 35.93 percent decrease in the power requirement for this component, when compare to the power requirements recommended by the manufacturer.

Additionally, the PEM fuel cell installed in the system required a hydrogen flow rate input of 2.17 x 10^{-5} cubic meter per second (1.3 slpm) for maximum power output. Using the power input recommended by the manufacturer the calculations presented in Appendix H (B) shows a power requirement for the HydroTube of 383.5 W to produce a hydrogen flow rate of 2.17 x 10^{-5} cubic meter per second (1.3 slpm). The data gathered for the HydroTube shows an average power requirement of 246.1 W in order to produced hydrogen flow rate required by the PEM fuel cell. The actual power requirement for the HydroTube to produce the hydrogen flow required by the PEM fuel cell represents an 18.53 percent decrease in the total power requirement for the system. Table 7 shows a comparison between the power requirement recommended by the manufacturer and the one observed during testing for the HydroTube. To produce the required hydrogen flow rate.

Table 7. Comparison Between the Power Requirement Recommended By Manufacturer and the One Observed During Testing for the Hydrotube to Produce the Required Hydrogen Flow Rate.

Source of Data	Power Requirement (W) to produce 1 slpm of H_2	Power Requirement (W) to produce 1.3 slpm of H_2
Manufacturer Recommendation	295	383.5
Experimental Data	189	246.1

4. PEM Fuel Cell Performance

The two PEM fuel cells (PFC) installed in the system were found to generate on average less power than anticipated throughout a similar period of time. Both PFCs were tested and data gathered over 300 second intervals. The first set of tests was performed on the PFC with a capacity for a maximum power output of 100 W (PEM-H100). The data gathered for the PEM-H100 shows a periodic performance characteristic through the first 253 seconds of operations. During this time the data shows an instantaneous drop in voltage and power every 10 seconds, followed by a jump back to peak performance. According to the manufacturer, this performance characteristic is expected as part of the normal operational cycle for this type of fuel cell. The controller for the PEM-H100 automatically short circuits the fuel cell for 0.2 seconds every 10 seconds to recondition the internal components of the fuel cell in order to maintain peak performance. Then, during the last 47 seconds of operation the data shows four complete shutdowns of 5, 5, 1, and 6 seconds respectively. After each of these shutdowns, the controller automatically restarted the system back to normal operations. This kind of prolonged shutdowns are not part of the normal operational characteristic for this type of fuel cell. Figure 16 and Figure 17 show respectively the voltage and power generated by the PEM-H100 over a 300 second interval. They also show the periodic performance characteristic of the fuel cell and the shutdowns after approximately 253 seconds.

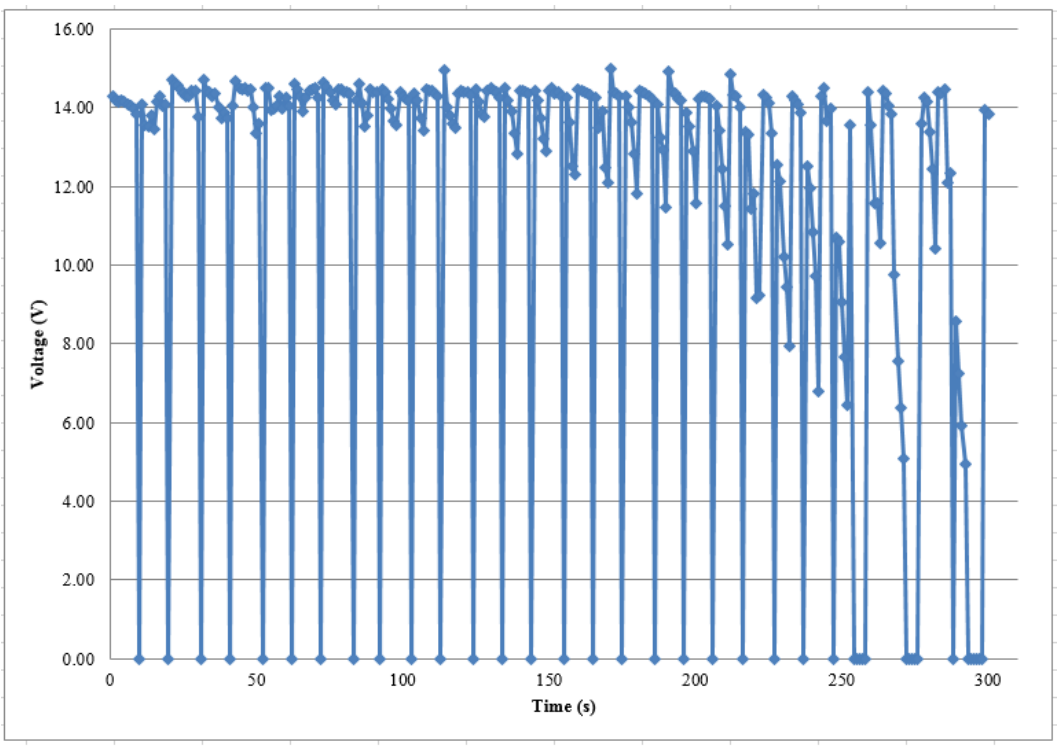

Figure 16. PEM Fuel Cell-H100: Voltage vs. Time.

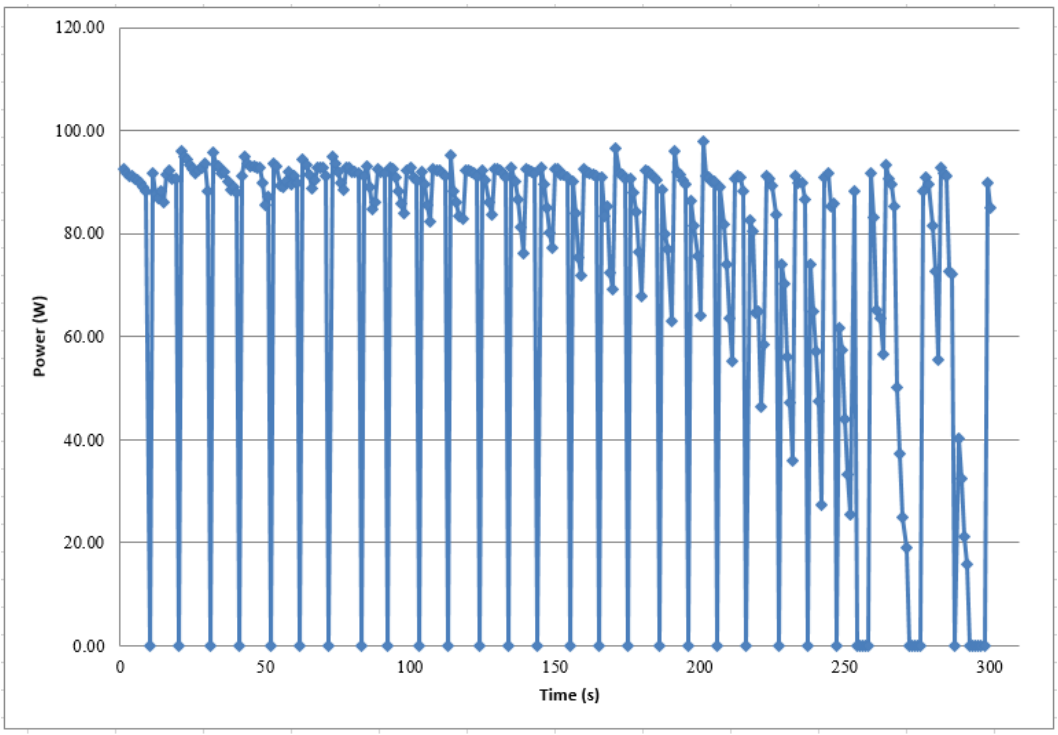

Figure 17. PEM Fuel Cell-H100: Power vs. Time.

Additionally, the data gathered for the PEM-H100 showed an average for power generated of 78.65 W at 12.63 V throughout the 300 second interval. The average power generated by the PEM-H100 represents a 21.35 percent decrease in the expected power generation capacity for this fuel cell. At this point it is important to point out the PEM-H100 has a gage pressure requirement for the hydrogen fed into the fuel call of 0.45-0.55 bar. The data gathered shows a gage pressure for the hydrogen of only 0.32 bar. The data gathered also shows a sudden decrease in power generated after 150 seconds of constant operation. During the initial 150 seconds of operation the PEM-H100 generated an average of 90.46 W at 14.18 V, which represents a 9.54 percent decrease in the expected power generation capacity for this fuel cell. Then, during the last 150 seconds of operation the power generated by the PEM-H100 started to continuously drop in an exponential way until the fuel cell finally shutdown at 300 seconds. The average for the power generated through the last 150 seconds gets decreased to 67.18 W at 11.13 V. The drop in power generated by the PEM-H100 represents a 32.82 percent decrease in the expected power generation capacity for this fuel cell.

The second set of tests was performed on the PFC with a capacity for a maximum power output of 20 W (PEM-H20). Like the PEM-H100 the gage pressure requirement for the hydrogen fed into the fuel call was 0.45-0.55 bar. The data gathered shows the diaphragm pump a raised on gage pressure for the hydrogen of only 0.32 bar. On the other hand the hydrogen flow rate required for maximum power output was considerably less, 4.67×10^{-6} cubic meter per second (0.28 slpm). The performance observed for the PEM-H20 shows a similar periodic performance characteristic to the one presented in the data for the PEM-H100. As it was said previously this performance characteristic is part of the normal operational cycle this type of fuel cell. Additionally, just like the data for the PEM-H100, the power generated by the PEM-H20 eventually started to drop. The time it took for this fuel cell to present a similar drop in power generated was longer than the one it took for the PEM-H100. This behavior was expected due to the fact that the PEM-H20 to generate power requires about a quarter of the hydrogen flow rate required by the PEM-H100. Refer to Appendix J and Figure 24 for more information regarding the technical specifications of the H-20 PEM fuel cell. It is also worth mentioning that in

order to operate the PEM-H20 with the hydrogen flow rate produced by the HydroTube the purge valve was removed. The combination of a considerable higher hydrogen flow rate and purge valve was limiting the power production capability of the PEM-H20. Figure 18 shows the configuration of the PEM-H20.

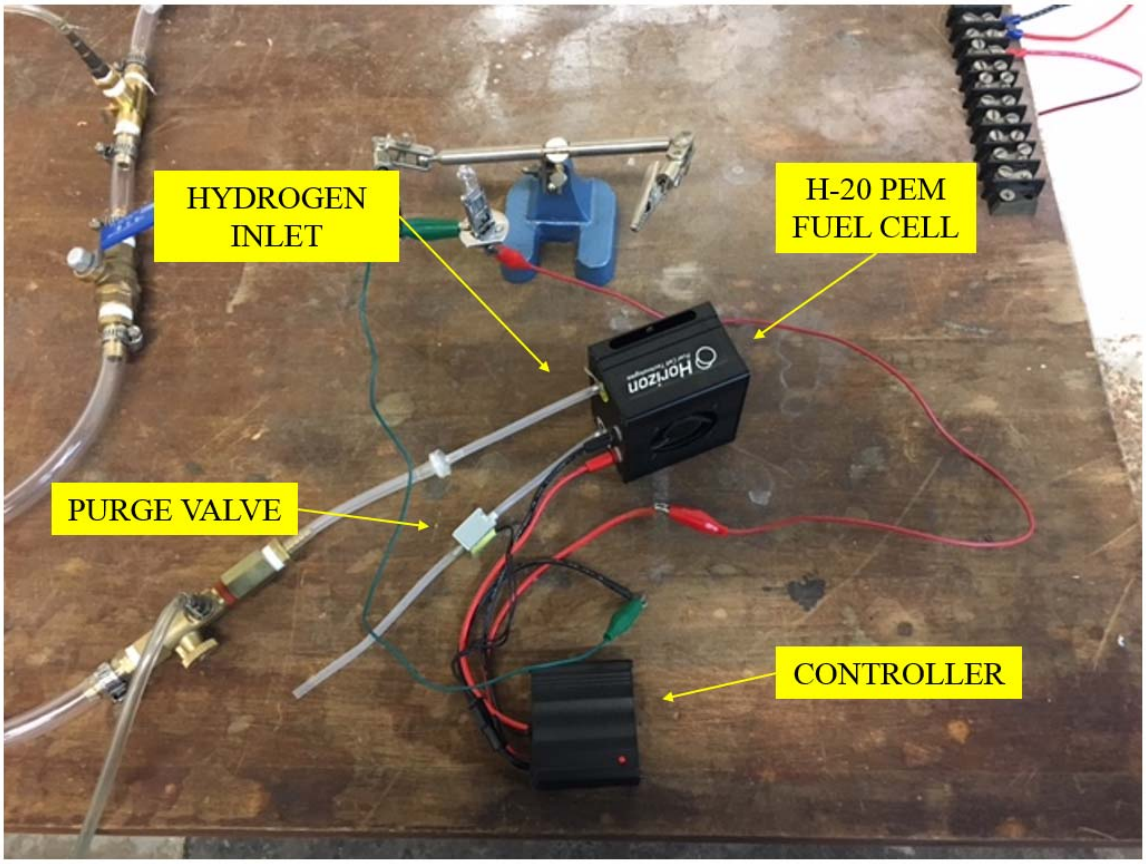

Figure 18. H20 PEM Fuel Cell Configuration.

B. SYSTEM PERFORMANCE

The overall performance obtained with the integration of each of the components addressed previously into a single prototype system enabled the achievement of five of the seven objectives set forth at the beginning of this thesis. Through the initial stage of the testing process the design concept was changed due to a discrepancy found between the absolute pressure of the hydrogen flow rate produced by the HydroTube and the absolute pressure required by the PEM fuel cell. The absolute pressure for the hydrogen

produced by the HydroTube was 1 atmosphere (atm), and the absolute pressure required by the PEM fuel cell for the hydrogen flow was 1.45-1.55 atm. To solve the discrepancy between the pressures a diaphragm pump was installed in the system. The diaphragm pump used in the system is part of the ARO Series (model type: PD02P-APS-PTA) manufactured by Ingersoll-Rand. The diaphragm pump is compressed air operated and has a maximum working pressure of 6.9 atm (100 psi). Figure 19 shows the diaphragm configuration in the prototype system. Figure 20 and Appendix B shows the revised concept diagram depicting the main components implemented in the design to include the diaphragm pump.

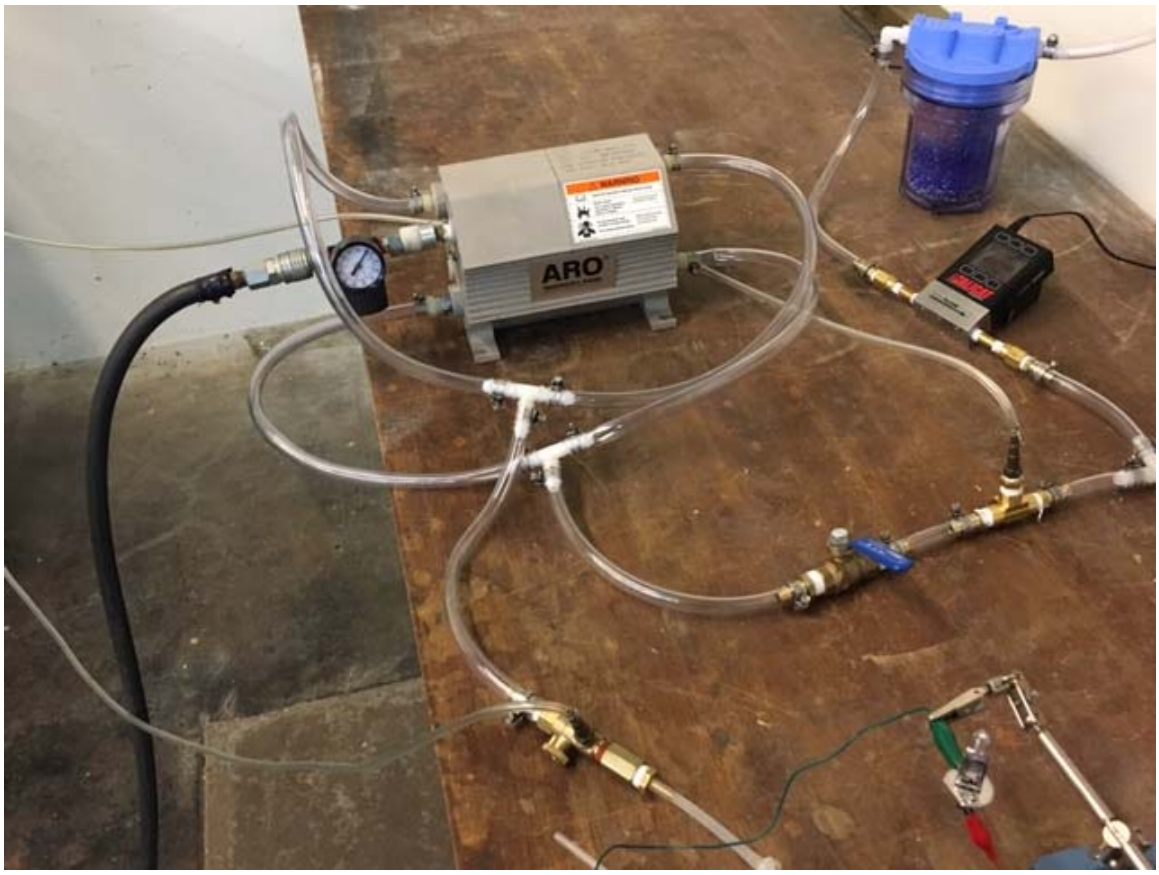

Figure 19. Concept Design Diagram with Diaphragm Pump.

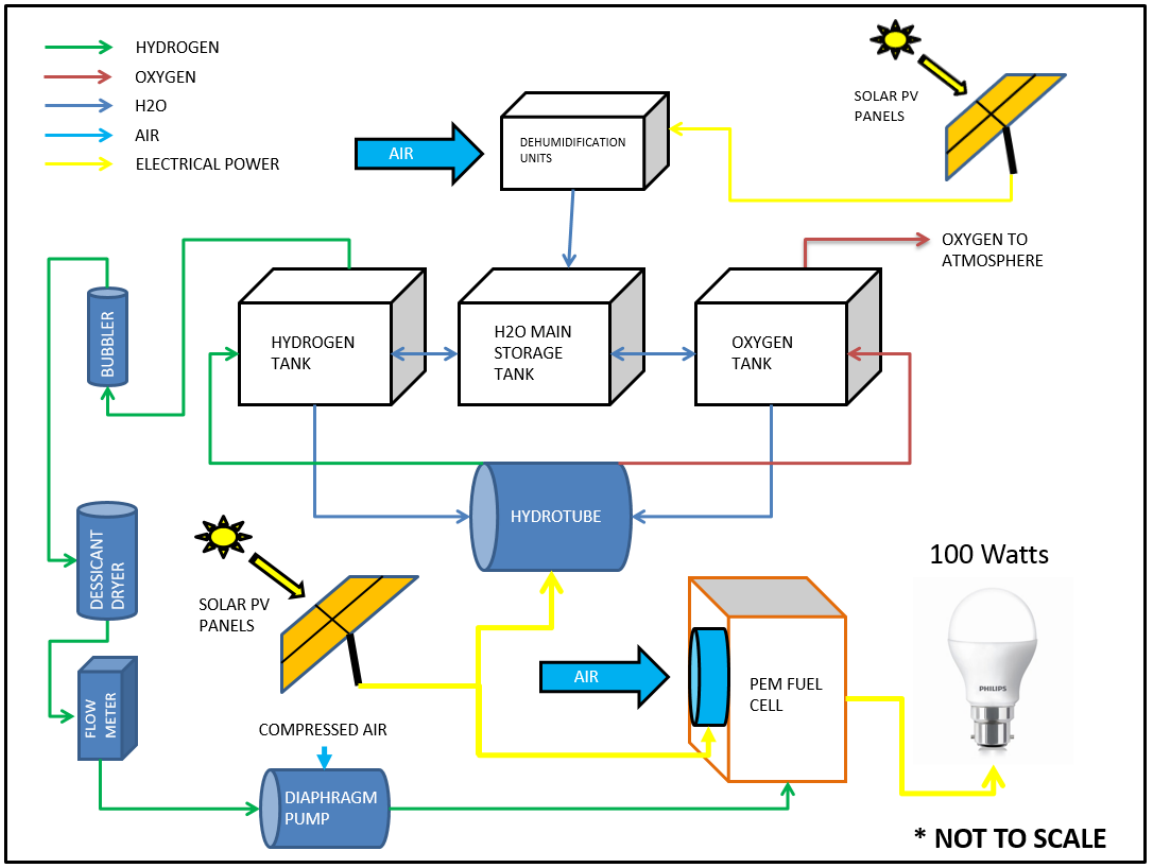

Figure 20. Concept Design Diagram with Diaphragm Pump.

During the design process the calculated theoretical efficiency for the prototype system was 13.5 percent. The efficiency was calculated by dividing power input (P_{in}) over power output (P_{out}). The theoretical P_{in} for each of the components used during the design process can be found in Figure 9 (System One Line Diagram), and the expected P_{out} was the maximum power output for the PEM-H100. The P_{in} at this point did not included the energy required by the diaphragm pump to compress the hydrogen flow rate. The efficiency for the actual prototype system was calculated using the same parameters established for the theoretical efficiency. The main difference between both calculations is that in order to calculate the actual efficiency for the prototype system the energy used by the diaphragm pump to compress the hydrogen flow rate must be accounted for as a P_{in} source. Appendix H (D) shows the calculation for the P_{in} added by the diaphragm pump. Based on the data gathered and calculated the actual efficiency for the prototype

system was 13.3 percent, which represents a 1.48 percent decrease in the operating efficiency for the prototype system. Table 8 shows a comparison between the power inputs and power outputs used to calculate the theoretical and actual efficiency for the prototype system.

Table 8. Comparison Between the Power Inputs and Power Outputs Used to Calculate the Theoretical and Actual Efficiency for the Prototype System.

Data Source	Power Input (W) by Sources				Total Power Input (W)	Power Out (W)	Efficiecny
	Dehumidification Units	Electrolytic Cell	PEM Fuel Cell	Diaphragm Pump			
Theoretical	288.00	383.50	70.00	0.00	741.50	100.00	13.5%
Experimental	274.00	246.10	70.00	0.53	590.63	78.65	13.3%

The two objectives that were not directly achieved by analyzing the system performance are: 1) show the system can be scaled up to meet various energy requirements, and 2) compare the efficiency presented by the prototype system tested throughout this thesis with the efficiency of common power generating systems. To meet these objectives data for PEM fuel cells with capacities of maximum power output of 1,000 W (PEM-H1000) and 5,000 W (PEM-H5000) were obtained from the same manufacturer that built the PEM-H100 used throughout this thesis. The data for these PEM fuel cells was used to calculate theoretical performance and efficiency for two new prototype systems capable of meeting higher energy requirements. For the most part the process used to calculate the theoretical efficiency for the PEM-H1000 and PEM-H5000 was the same to the one used to calculate the theoretical efficiency presented in Table 8. The main difference between the two processes was that in the latter a safety factor of three was used to calculate the number of dehumidification units required by the system, and the energy required to compress the hydrogen flow was incorporated. The technical specification for PEM-H1000 and PEM-H5000 can be found in Appendix K (Figure 25) and Appendix L (Figure 26) respectively. Also the process to calculate each of the power inputs for each of the theoretical prototype systems can be found in Appendix H. Table 9

shows a comparison of theoretical performance and efficiency for prototype systems using three different PEM fuel cells: PEM-H100, PEM-H1000 and a PFC-5000W. Table 10 shows the comparison of system efficiencies for various power generation systems to include theoretical efficiencies calculated for the PEM-H100, PEM-H1000 and PEM-H5000.

Table 9. Comparison of Theoretical Performance and Efficiency for Prototype Systems Using Different PEM Fuel Cells: PEM-H100, PEM-H1000 and PEM-H5000.

Theoretical Data	Power Input (W) by Sources				Total Power Input (W)	Power Out (W)	Efficiecny
	Dehumidification Units	Electrolytic Cell	PEM Fuel Cell	Diaphragm Pump			
PEM-H100	432.00	383.50	70.00	0.62	886.12	100.00	11.3%
PEM-H1000	3984.00	3835.00	104.00	6.18	7929.18	1000.00	12.6%
PEM-H5000	19921.00	19175.00	288.00	30.90	39414.90	5000.00	12.7%

Table 10. Comparison of System Efficiency for Various Power Generation Systems. Adapted from [29].

Power Generation Systems	System Efficiency (%)
Theoretical: PEM-H100	11.3
Theoretical: PEM-H1000	12.6
Theoretical: PEM-H5000	12.7
Steam turbine fuel-oil power plants	38-44
Steam turbine coal-fired power plants	39-47
Large gas turbine	39
Nuclear power plant	33—36
Large hydro plant	95

THIS PAGE INTENTIONALLY LEFT BLANK

V. CONCLUSION

The main focus of this thesis was to develop a concept design and a prototype system capable of increasing and improving the two main energy constraints the Department of Defense must overcome to meet future mission requirements, energy availability and resiliency. The prototype system will reduce the dependency on fossil fuels by generating specific amounts of power using hydrogen produced with only renewable sources. To achieve this the prototype system relies in the integration of various commercially available components: solar panels, dehumidification units, electrolytic cell, diaphragm pump and PEM fuel cell.

Experimental results were obtained and analyzed for each of the components installed in the system. The array of solar panels were found to produce enough power to simultaneously operate all the components across the system: four dehumidification, one electrolytic cell and a PEM fuel cell. The dehumidification units were found to extract less water from ambient moisture than expected. These results were validated through two distinct tests: 1) continuous operation over 24 hours and 2) continuous operation over 8 hours. For both tests the data showed lower water extraction from ambient moisture, 69 percent lower for the first test and 16.81 percent lower for the second test. The electrolytic cell (HydroTube) was found to require less power than anticipated to produce the hydrogen flow required by the PEM fuel cell. The data gathered for the HydroTube showed an average power requirement of 246.1 W in order to produce a hydrogen flow rate of 2.17 cubic meter per second (1.3 slpm), which was considerably less than the power requirement of 383.5 W calculated using the manufacturer recommendations. This decrease in power requirement to produce the hydrogen flow required by the PEM fuel cell represents an 18.53 percent decrease in the total power requirement for the system.

The H100 PEM fuel cell installed in the system was found to generate on average less power than anticipated. The fuel cell was tested over 300 second intervals. The maximum power output for the fuel cell was 100 W, but the data showed an average power generated of 78.65 W. The power generated by the fuel cell represented a 21.35 percent decrease in the expected power generation capacity for this component. The data

for power generated also presented a periodic performance characteristic of instantaneous drop in voltage and power which are normal in the operational cycle for this type of fuel cell. Additionally, the data showed an exponential decrease in power generated after 150 seconds of operation that can be attributed to low hydrogen mass flow and low hydrogen pressure. These assumptions were validated with data gathered from testing performed in a second fuel cell with maximum power output of 20 W (H20 PEM fuel cell). The H20 PEM fuel cell required considerably less hydrogen flow than the H100 PEM fuel cell in order to generate power, but the data still presented a similar decrease in power generated after a longer period of operation. Finally, the integrated analysis of the data gathered for each of the components installed in the system showed an overall operational efficiency for the prototype system of 13.3 percent. Theoretical calculations were done to prove the system could be scaled up to meet higher energy requirements. The calculations showed a theoretical efficiency of 12.6 percent for a prototype system capable of generating 1,000 W, and 12.7 percent for prototype system capable of generating 5,000 W.

In the end, even though the prototype system was found to operate at lower efficiencies than other established power generating system, the main objectives set forth at the beginning of this thesis were achieved. The concept design and prototype system presented in this thesis proved that DOD can increase energy availability and improve energy resiliency through its operations and installations by generating specific amounts of power using hydrogen produced with only renewable sources.

VI. RECOMMENDATIONS

While the main objectives established at the beginning of this thesis were achieved, the prototype system must undergo further refinement in order to become an actual asset used to increase energy availability and improve energy resiliency throughout DOD facilities. Some of the recommendations that must be implemented in the following testing stages are:

- Install two additional dehumidification units.
- Install an electrolytic cell (HydroTube) with the capacity to increase the hydrogen flow rate in the system.
- Implement an automated data collection system or method.
- Develop a process to compress and store the hydrogen produced by the HydroTube.

In order for the prototype system to achieve a steady state operation the rate at which the hydrogen is being consumed by the PEM fuel cell, the hydrogen is being produced by the HydroTube and the water is being extracted from ambient moisture by the dehumidification units must be equal. Based on the data gathered at least two additional dehumidification units should be installed in the system to meet the water extraction requirement for steady state operation.

To maintain a steady power generation the PEM fuel cell requires the hydrogen input to meet a specific flow rate and pressure parameters. The performance characteristics obtained through the analysis process for the PEM fuel cell clearly shows a deficiency of hydrogen flow through the system. In order to mitigate that deficiency another model for the HydroTube must be installed in the system capable of producing a hydrogen flow that meets the minimum flow required by the diaphragm pump.

In order to further improve any aspect of the concept design and prototype system developed in this thesis a better understanding of the performance of each components used across the system must be achieved. The data gathered through the testing process for this thesis was done using rudimentary techniques such as hand written notes and

video. The implementation of an automated data collection system would provide faster and more accurate data for each components, and could exponentially improve the ability to optimize the overall performance of the system.

The operational capability of the prototype system was tested during steady state operations. In order to effectively meet the ultimate goal of increasing energy availability and improving energy resiliency the long term focus of this system would first use the same renewable sources to produce, compress and store hydrogen, and only when needed the hydrogen would be used to generate power. As it stands right now the system does not have the capability to compress and store the hydrogen. Therefore, addition of a compression and storage mechanism would dramatically improve the overall operational capability of the entire system.

APPENDIX A. CONCEPT DESIGN DIAGRAM

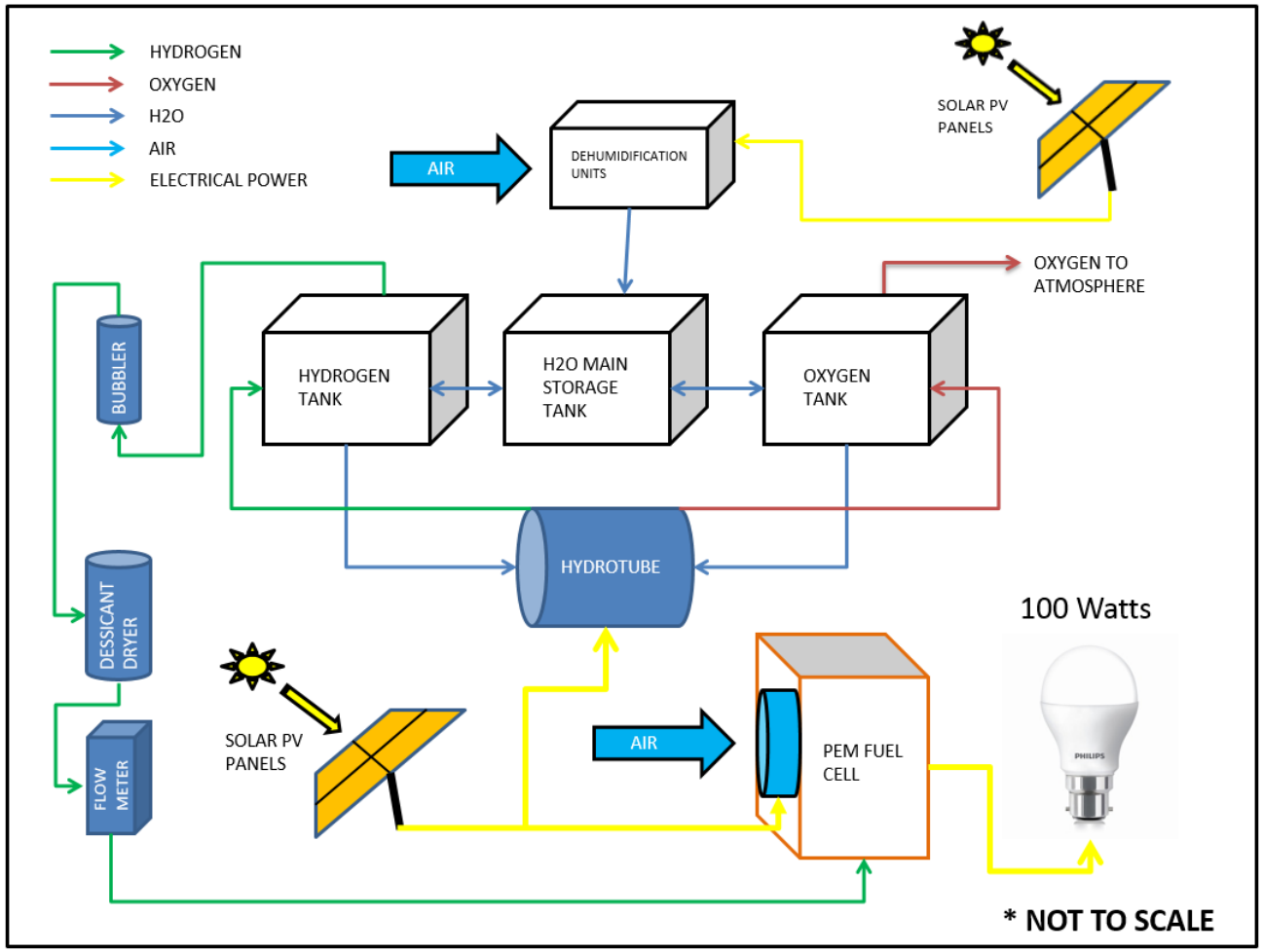

THIS PAGE INTENTIONALLY LEFT BLANK

APPENDIX B. CONCEPT DESIGN DIAGRAM WITH DIAPHRAGM PUMP

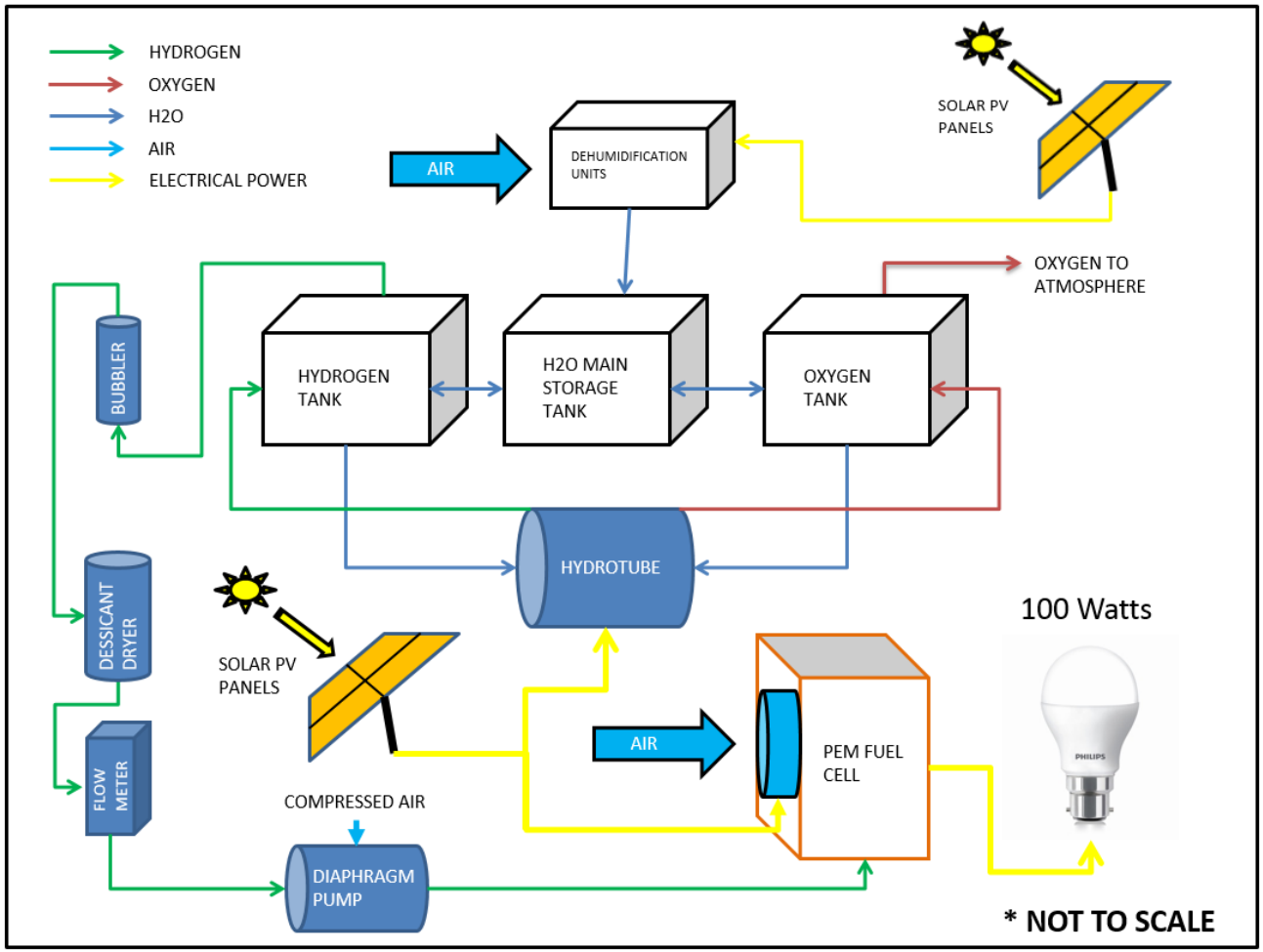

THIS PAGE INTENTIONALLY LEFT BLANK

APPENDIX C. TABLE COMPARING FIVE COMMERCIAL HYDROGEN FUEL CELLS. ADAPTED FROM [26].

Fuel Cell Type	Common Electrolyte	Operating Temperature	Power Output (kW)	Electrical Efficiency	Applications	Advantages	Challenges
Polymer Electrolyte Membrane (PEM)	Perfluorosulfonic acid	<120°C	<1 kW–100 kW	60%	Backup power, Portable power, Transportation	a) Minimizes corrosion and electrolyte management problems b) Low operating temperature c) Quick start	a) Expensive catalysts b) Sensitivity to fuel impurities
Alkaline (AFC)	Aqueous potassium hydroxide soaked in a porous matrix, or alkaline polymer membrane	<100°C	1–100 kW	60%	Military, Space, Backup power, Transportation	a) Lower cost for electrolyte b) Low operating temperature c) Quick start-up	a) Sensitive to CO2 in fuel and air b) Electrolyte management and conductivity
Phosphoric Acid (PAFC)	Phosphoric acid soaked in a porous matrix or imbibed in a polymer membrane	150°–200°C	5–400 kW,	40%	Distributed generation	a) Increased tolerance to fuel impurities	a) Expensive catalysts b) Long start-up time c) Sulfur sensitivity
Molten Carbonate (MCFC)	Molten lithium, sodium, and/or potassium carbonates, soaked in a porous matrix	600°–700°C	300 kW – 3 MW	50%	Electric utility, Distributed generation	a) High efficiency b) Fuel flexibility c) Hybrid/gas turbine cycle	a) High temperature corrosion and breakdown of cell components b) Long start-up time c) Low power density
Solid Oxide (SOFC)	Yttria stabilized zirconia	500°–1,000°C	1 kW – 2 MW	60%	Auxiliary power, Electric utility, Distributed generation	a) High efficiency b) Fuel flexibility c) Solid electrolyte d) Hybrid/gas turbine cycle	a) High temperature corrosion and breakdown of cell components b) Long start-up time c) Limited number of shutdowns

THIS PAGE INTENTIONALLY LEFT BLANK

APPENDIX D. SOLAR PANEL SPECIFICATIONS

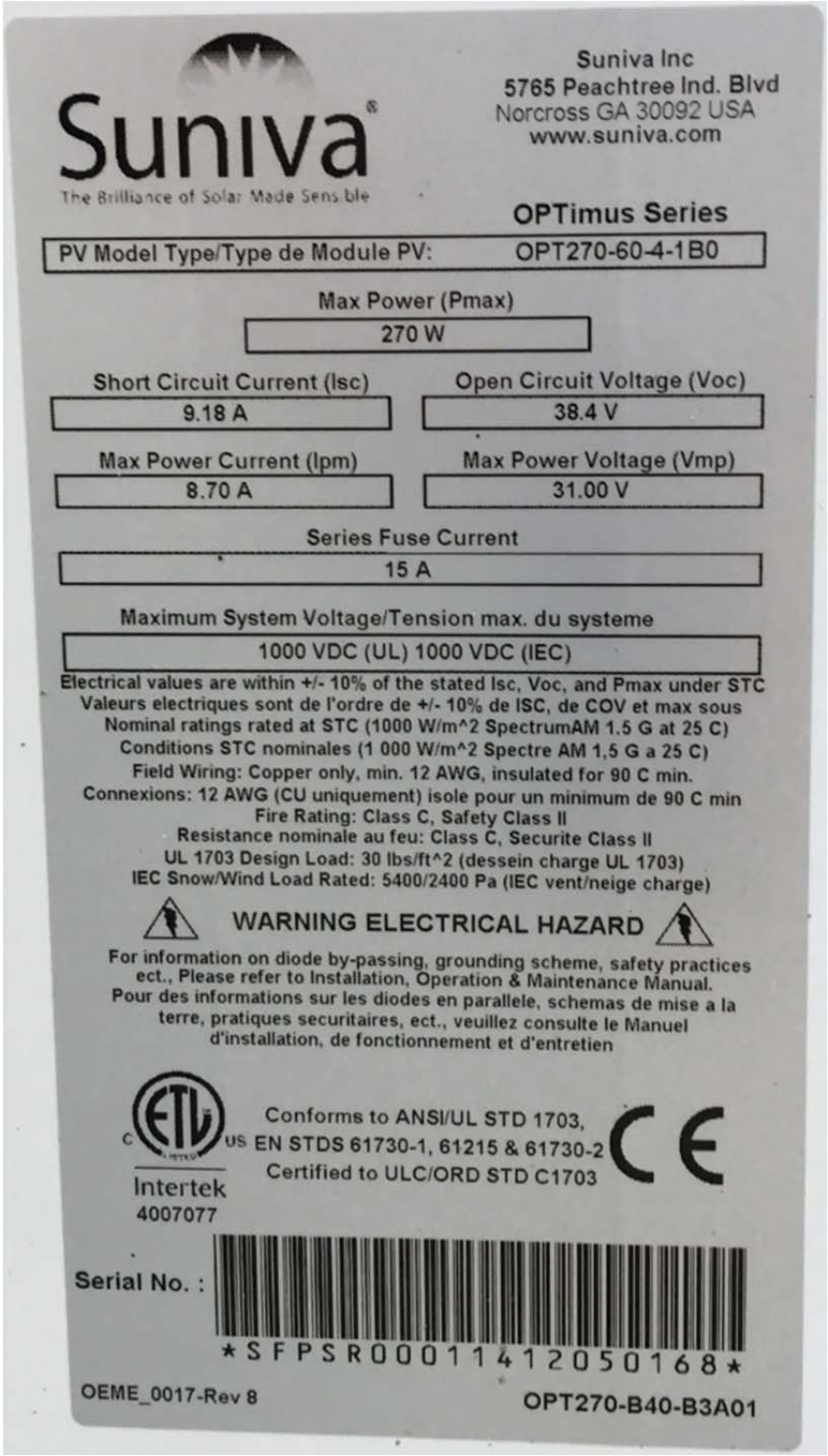

Suniva

The Brilliance of Solar Made Sensible

Suniva Inc
5765 Peachtree Ind. Blvd
Norcross GA 30092 USA
www.suniva.com

OPTimus Series

PV Model Type/Type de Module PV:	OPT270-60-4-1B0

Max Power (Pmax)
270 W

Short Circuit Current (Isc)	Open Circuit Voltage (Voc)
9.18 A	38.4 V
Max Power Current (Ipm)	**Max Power Voltage (Vmp)**
8.70 A	31.00 V

Series Fuse Current
15 A

Maximum System Voltage/Tension max. du systeme
1000 VDC (UL) 1000 VDC (IEC)

Electrical values are within +/- 10% of the stated Isc, Voc, and Pmax under STC
Valeurs electriques sont de l'ordre de +/- 10% de ISC, de COV et max sous
Nominal ratings rated at STC (1000 W/m^2 SpectrumAM 1.5 G at 25 C)
Conditions STC nominales (1 000 W/m^2 Spectre AM 1,5 G a 25 C)
Field Wiring: Copper only, min. 12 AWG, insulated for 90 C min.
Connexions: 12 AWG (CU uniquement) isole pour un minimum de 90 C min
Fire Rating: Class C, Safety Class II
Resistance nominale au feu: Class C, Securite Class II
UL 1703 Design Load: 30 lbs/ft^2 (dessein charge UL 1703)
IEC Snow/Wind Load Rated: 5400/2400 Pa (IEC vent/neige charge)

WARNING ELECTRICAL HAZARD

For information on diode by-passing, grounding scheme, safety practices ect., Please refer to Installation, Operation & Maintenance Manual.
Pour des informations sur les diodes en parallele, schemas de mise a la terre, pratiques securitaires, ect., veuillez consulte le Manuel d'installation, de fonctionnement et d'entretien

Conforms to ANSI/UL STD 1703,
EN STDS 61730-1, 61215 & 61730-2
Certified to ULC/ORD STD C1703

Intertek
4007077

Serial No. :
SFPSR0001141205 0168

OEME_0017-Rev 8

OPT270-B40-B3A01

THIS PAGE INTENTIONALLY LEFT BLANK

APPENDIX E. BREAKER PANEL WIRING DESCRIPTION

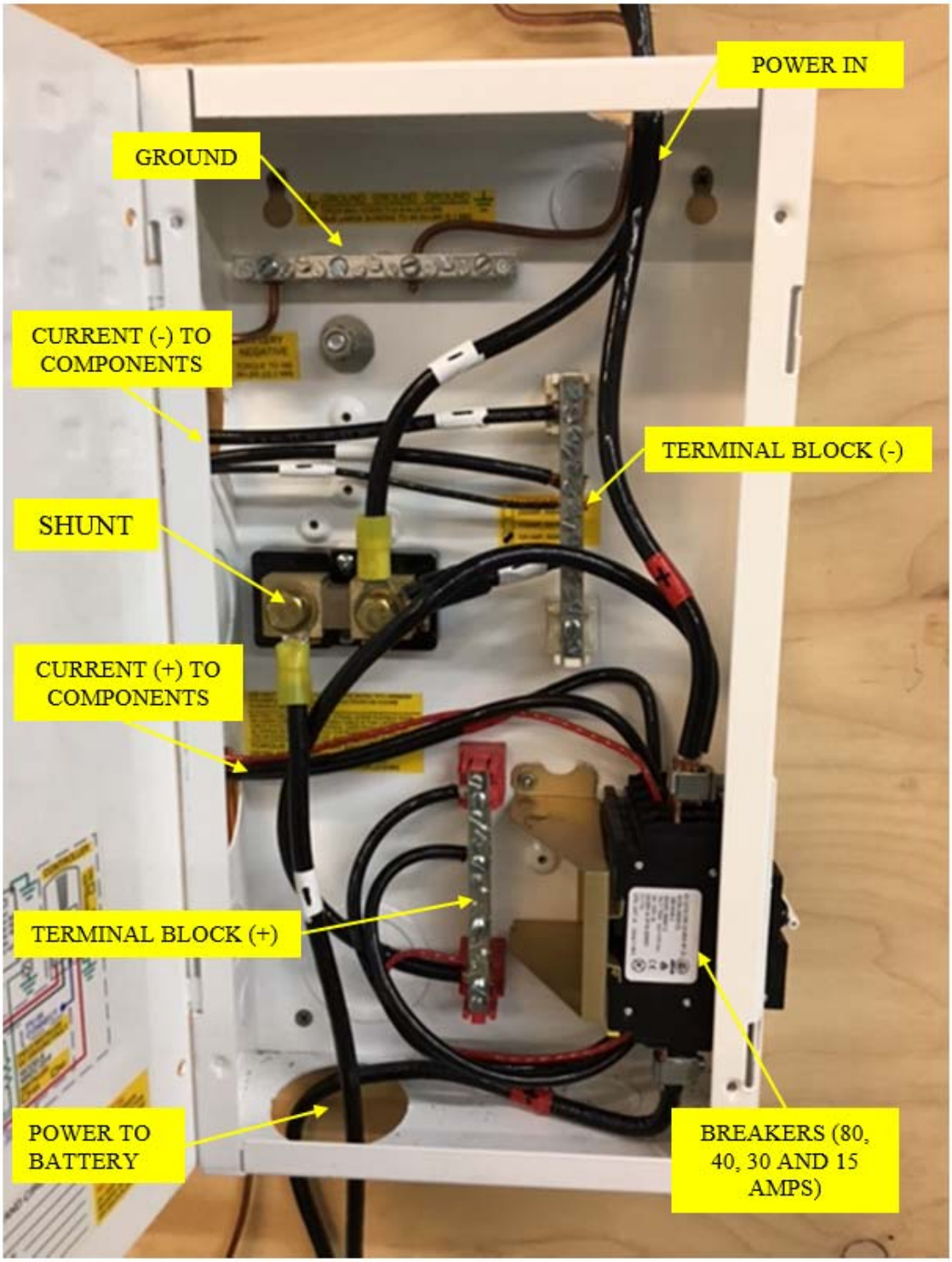

THIS PAGE INTENTIONALLY LEFT BLANK

APPENDIX F. INCOMING AND OUTGOING CONNECTIONS TO CHARGE CONTROLLER AND BREAKER PANEL

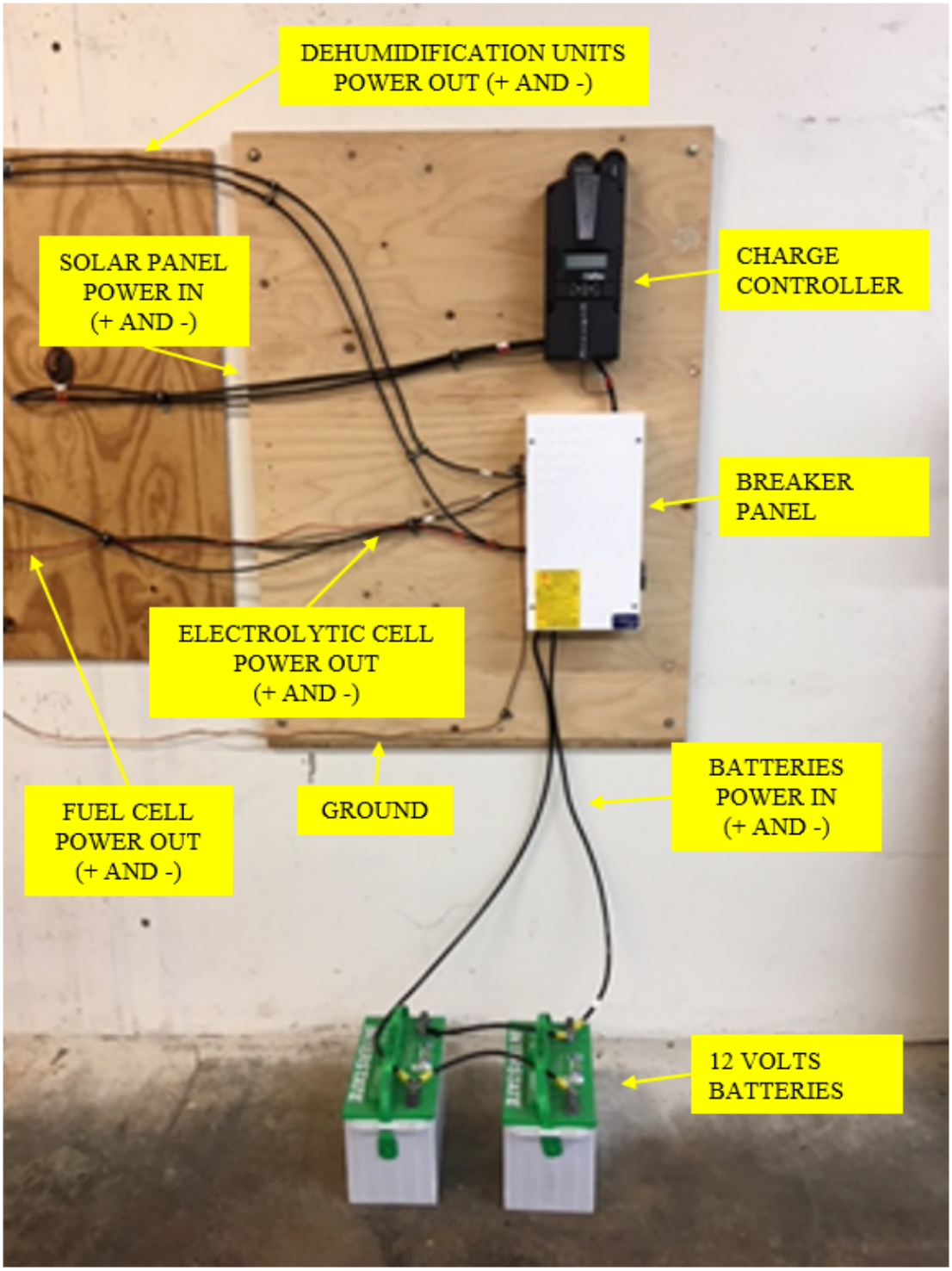

THIS PAGE INTENTIONALLY LEFT BLANK

APPENDIX G. SYSTEM ONE LINE DIAGRAM

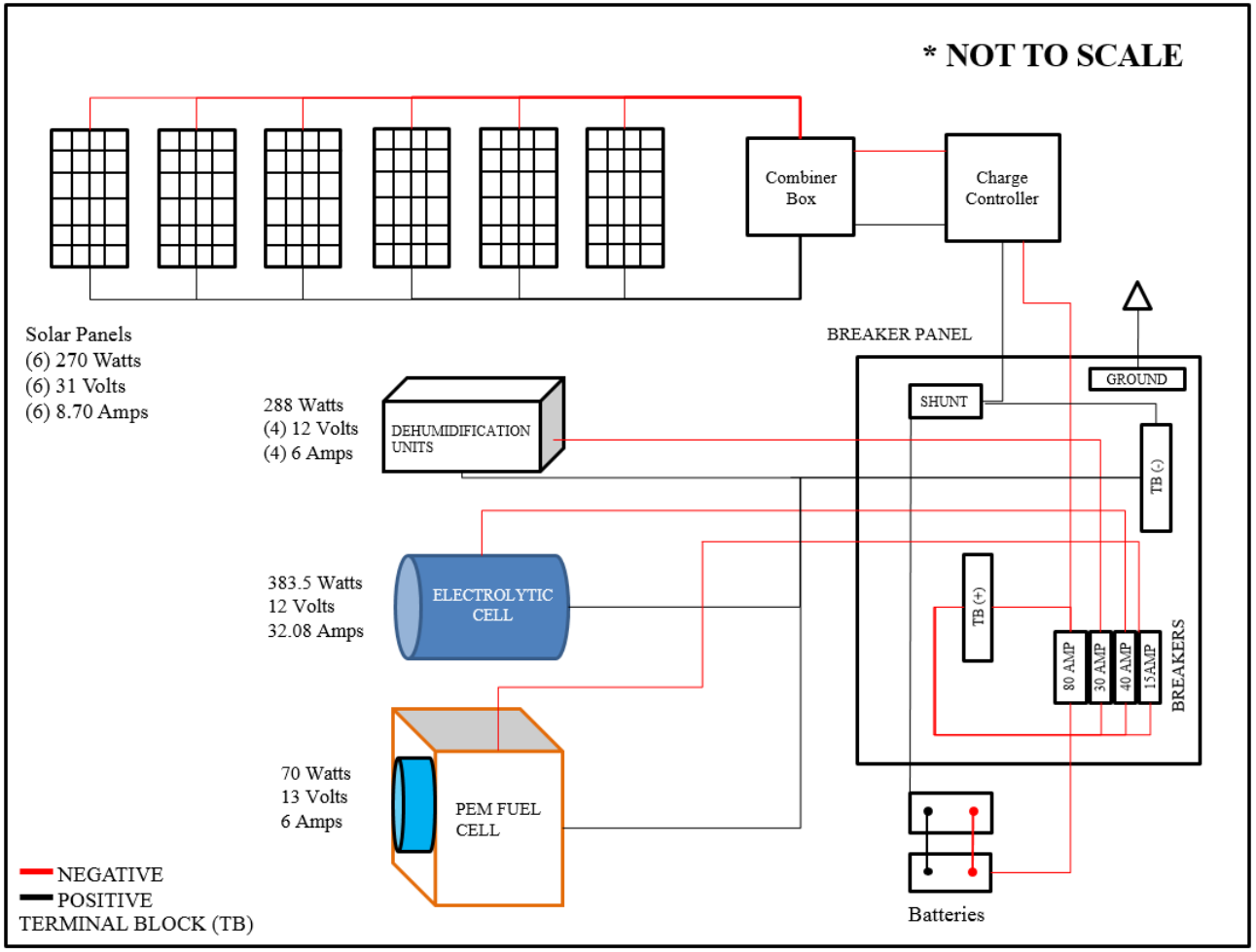

THIS PAGE INTENTIONALLY LEFT BLANK

APPENDIX H. CALCULATIONS

A. NUMBER OF DEHUMIDIFIERS NEEDED BASED ON HYDROGEN FUEL CELL'S VOLUMETRIC FLOW RATE REQUIREMENT

1. Manufacturer's specified hydrogen volumetric flow rate require for Max Power output (100W).

$$\dot{V}_{Hydrogen} = 1.3\ \frac{L}{min}$$

$$\dot{V}_{Hydrogen} = 1.30\frac{L}{min} * \left(\frac{1\ min}{60\ s}\right) * \left(\frac{0.001m^3}{1L}\right)$$

$$\dot{V}_{Hydrogen} = 2.1\bar{6}\ x\ 10^{-5}\frac{m^3}{s}$$

2. Hydrogen density [3]:

$$\rho_{Hydrogen} = 0.0813\frac{kg}{m^3}$$

3. Hydrogen mass flow rate:

$$\dot{m}_{Hydrogen} = \rho_{Hydrogen} * \dot{V}_{Hydrogen}$$

$$\dot{m}_{Hydrogen} = 0.0813\frac{kg}{m^3} * 2.1\bar{6}\ x\ 10^{-5}\frac{m^3}{s}$$

$$\dot{m}_{Hydrogen} = 1.756\ x\ 10^{-6}\frac{kg}{s}$$

4. Molar mass composition of water (H_2O)

Table 11. Molar Composition of Water. Adapted from [30].

	Symbol	Atomic Mass (kg/mol)	Atoms	Mass Percentage (%)
Hydrogen	H	1.008 x 10–^{3}	2	11.190
Oxygen	O	15.999 x 10–^{3}	1	88.810

$$\text{molar mass } H_2O = 18.015 \text{ x } 10^{-3} \frac{\text{kg}}{\text{mol}}$$

5. Water (H_2O) mass flow rate:

$$\dot{m}_{H_2O} = 1.756\text{x}10^{-6} \frac{\text{kg of } H_2}{\text{s}} * \left(\frac{1 \text{ mol of } H_2O}{2.016\text{x}10^{-3}\text{kg of } H_2}\right) * \left(\frac{18.015\text{x}10^{-3} \text{ kg of } H_2O}{1 \text{ mol of } H_2O}\right)$$

$$\dot{m}_{H_2O} = 1.569 \text{ x } 10^{-5} \frac{\text{kg of } H_2O}{\text{s}}$$

6. H_2O density [3]:

$$\rho_{H_2O} = 997 \frac{\text{kg}}{\text{m}^3}$$

7. H_2O volumetric flow rate:

$$\dot{V}_{H_2O} = \frac{\dot{m}_{H_2O}}{\rho_{H_2O}}$$

$$\dot{V}_{H_2O} = \frac{1.569 \text{ x } 10^{-5} \frac{\text{kg}}{\text{s}}}{997 \frac{\text{kg}}{\text{m}^3}}$$

$$\dot{V}_{H_2O} = 1.574 \text{ x } 10^{-8} \frac{\text{m}^3}{\text{s}}$$

8. H_2O volumetric flow rate per day of operation:

$$1 \text{ day of operation} = 8 \text{ hrs of sunlight}$$

$$\dot{V}_{H_2O \text{ day of operation}} = 1.574 \text{ x } 10^{-8} \frac{m^3}{s} * \left(\frac{3600 \text{ s}}{1 \text{ hr}}\right) * \left(\frac{8 \text{ hr}}{1 \text{ day of operation}}\right)$$

$$\dot{V}_{H_2O \text{ per day of operation}} = 4.533 \text{ x } 10^{-4} \frac{m^3}{\text{day of operation}}$$

$$\dot{V}_{H_2O \text{ per day of operation}} = 15.328 \frac{\text{oz}}{\text{day of operation}}$$

9. Quantity of dehumidifiers needed to meet H_2O volumetric flow rate per day of operation:

Manufacturer's specification of max production of H_2O per unit per day = 25 oz

$$1 \frac{\text{unit production}}{24 \text{ hr}} = 25 \text{ oz}$$

$$1 \frac{\text{unit production}}{\text{day of operation}} = \frac{25 \text{ oz}}{24 \text{ hr}} * \left(\frac{8 \text{ hr}}{1 \text{ day of operation}}\right) * \left(\frac{1 \text{ L}}{33.8140 \text{ oz}}\right) * \left(\frac{0.001 m^3}{1 \text{ L}}\right)$$

$$1 \frac{\text{unit production}}{\text{day of operation}} = 2.465 \text{ x } 10^{-4} \frac{m^3}{\text{day of operation}}$$

$$\text{Units Required} = \frac{\dot{V}_{H_2O \text{ per day of operation}}}{1 \frac{\text{unit production}}{\text{day of operation}}} = \frac{4.533 \text{ x } 10^{-4} \frac{m^3}{\text{day of operation}}}{2.465 \text{ x } 10^{-4} \frac{m^3}{\text{day of operation}}}$$

$$\text{Units Required} = 1.84 \text{ units} \cong 2 \text{ units}$$

10. Implementation of Safety Factor (SF) to account for unforeseen conditions that might interfere with manufacturer's specified max production per unit:

$$SF = 2$$

$$\text{Total Units Required} = \text{ Units Required} * SF$$

Total Units Required = 4

B. POWER REQUIRE BY THE HYDROTUBE TO PRODUCE THE HYDROGEN VOLUMETRIC FLOW NEEDED TO ACHIEVE MAX POWER OUTPUT BY THE HYDROGEN FUEL CELL

1. Manufacturer recommends for the HydroTube (HT) to be operated at 295 W in order to produce a hydrogen flow rate of 1 slpm.

$$\mathrm{HT}_{\text{standard operation}} = 295 \frac{\mathrm{W}}{\frac{\mathrm{L}}{\mathrm{min}}}$$

2. Hydrogen Fuel Cell volumetric flow rate requirement of H_2 for max power output

$$\dot{\mathrm{V}}_{\mathrm{Hydrogen}} = 1.3 \ \frac{\mathrm{L}}{\mathrm{min}}$$

3. HT power requirement to meet Hydrogen Fuel Cell volumetric flow rate requirement of H_2 for max power output

$$\mathrm{HT}_{\text{max power output}} = 295 \frac{\mathrm{W}}{\frac{\mathrm{L}}{\mathrm{min}}} * 1.3 \ \frac{\mathrm{L}}{\mathrm{min}}$$

$$\mathrm{HT}_{\text{max power output}} = 383.5 \ \mathrm{W}$$

C. AMPERAGE REQUIRE TO MEET THE POWER DEMAND BY THE HYDROTUBE FOR MAX POWER OUTPUT BY THE HYDROGEN FUEL CELL AT DIFFERENT VOLTAGE CONFIGURATIONS

1. The power requirement for the HydroTube (HT) to meet the PEM fuel cell hydrogen flow rate for max power output.

$$\mathrm{HT}_{\text{max power output}} = 383.5 \ \mathrm{W}$$

2. Current requirement based on a 12 volt configuration.

$$\text{Power (W)} = \text{Current (Amps) x Voltage (V)}$$

$$I = \frac{P}{V}$$

$$I = \frac{383.5\ W}{12\ V}$$

$$I = 31.96 \text{ amps}$$

3. Amperage requirement based on a 14 volts configuration.

$$I = \frac{383.5\ W}{14\ V}$$

$$I = 27.39 \text{ amps}$$

D. ENERGY REQUIRE TO COMPRESS THE HYDROGEN WITH A DIAPHRAGM PUMP FROM 0.942 BAR TO 1.265 BAR

1. From basic thermodynamic principles a formula to calculate the work ($\dot{W}$) required to compress hydrogen is derived as follows [30].

$$\dot{W} = \dot{m}_{Hydrogen} * Cp_{Hydrogen} * (T_2 - T_1).$$

$$\dot{m}_{Hydrogen} = \rho_{Hydrogen} * \forall_{Hydrogen}$$

$$\dot{W} = \rho_{Hydrogen} * \forall_{Hydrogen} * Cp_{Hydrogen} * (T_2 - T_1)$$

$$\rho_{Hydrogen} = \frac{P_1}{R_{Hydrogen} * T_1}$$

$$\dot{W} = \frac{P_1}{R_{Hydrogen} * T_1} * \forall_{Hydrogen} * Cp_{Hydrogen} * (T_2 - T_1)$$

2. The volumetric flow rate used in this calculation was the average hydrogen flow rate produced by the HydroTube throughout the testing process.

$$\forall_{\text{Hydrogen}} = 1.12\ \frac{\text{L}}{\text{min}} * \frac{1\ \text{min}}{60\ \text{s}} * \frac{0.001\ \text{m}^3}{1\ \text{L}} = 1.86\ \text{x}\ 10^{-5}\ \frac{\text{m}^3}{\text{s}}$$

3. The values for gas constant and specific heat of hydrogen were obtained from one of the sources used throughout the design process [30].

$$\text{R}_{\text{Hydrogen}} = 4{,}124\ \frac{\text{J}}{\text{kg} * \text{K}}$$

$$\text{Cp}_{\text{Hydrogen}} = 14{,}209\ \frac{\text{J}}{\text{kg} * \text{K}}$$

4. Pressure data is based on average values obtained at the inlet and outlet of the diaphragm pump.

$$\text{P}_1(\text{gage}) = -0.058\ \text{bar} = -5{,}800\ \text{Pascal}$$

$$\text{P}_1(\text{absolute}) = 0.942\ \text{bar} = 94{,}200\ \text{Pascal}$$

$$\text{P}_2(\text{gage}) = 0.265\ \text{bar} = 26{,}500\ \text{Pascal}$$

$$\text{P}_2(\text{gage}) = 1.265\ \text{bar} = 126{,}500\ \text{Pascal}$$

5. The temperature at the inlet of the diaphragm pump used for this calculation was the average temperature in Monterey, CA for the month of November.

$$\text{T}_1 = 55.6\ °\text{F} = 286.26\ \text{K}$$

6. The temperature at the outlet of the diaphragm pump was calculated using isentropic relations. To do this the work done to compress the hydrogen flowing through the pump was assumed to be an isentropic process [31].

$$\frac{T_2}{T_1} = \left(\frac{P_2}{P_1}\right)^{\frac{\gamma-1}{\gamma}}$$

$$T_2 = T_1 \left(\frac{P_2}{P_1}\right)^{\frac{\gamma-1}{\gamma}}$$

$$\gamma = 1.4$$

$$T_2 = 286.26 * \left(\frac{126{,}500}{94{,}200}\right)^{\frac{1.4-1}{1.4}}$$

$$T_2 = 311.42 \text{ K}$$

7. The work ($\dot{W}$) required to compress hydrogen was calculated with the formula derived in section 1.

$$\dot{W} = \frac{94{,}200 \text{ P}}{4{,}124 \ \frac{\text{J}}{\text{kg} * \text{K}} * 286.26 \text{ K}} * 1.86 \text{ x } 10^{-5} \ \frac{\text{m}^3}{\text{s}} * 14{,}209 \ \frac{\text{J}}{\text{kg} * \text{K}} * (311.42 \text{ K} - 286.26 \text{ K})$$

$$\dot{W} = 0.53 \text{ W}$$

THIS PAGE INTENTIONALLY LEFT BLANK

APPENDIX I. PEM FUEL CELL (HORIZON, H-100) SPECIFICATIONS

A. H-100: TECHNICAL SPECIFICATIONS

Type of fuel cell	PEM
Number of cells	20
Rated Power	100W
Performance	12V @8.3A
H2 Supply valve voltage	12V
Purging valve voltage	12V
Blower voltage	12V
Reactants	Hydrogen and Air
External temperature	5 to 30°C
Max. stack temperature	65°C
H2 Pressure	0.45-0.55bar
Hydrogen purity	≧99.995% dry H2
Humidification	self-humidified
Cooling	Air (integrated cooling fan)
Stack weight (with fan & casing)	1290 grams(±50grams)
Controller weight	400 grams(±30grams)
Dimension	11.8cm x 10.4cm x 9.4cm
Flow rate at max output*	1.3 L/min
Start up time	≦30S at ambient temperature
Efficiency of stack	40% @ 12V
Low voltage shut down	10V
Over current shut down	12A
Over temperature shut down	65℃
External power supply**	13V (±1V), 5A

** The flow rate may change with the power output.*
*** System electronics need external power supply.*
**** The Specification is subject to change without notice.*

Figure 21. PEM Fuel Cell (Horizon, H-100) Technical Specifications. Source: [32].

B. H-100: SYSTEM SETUP DIAGRAM

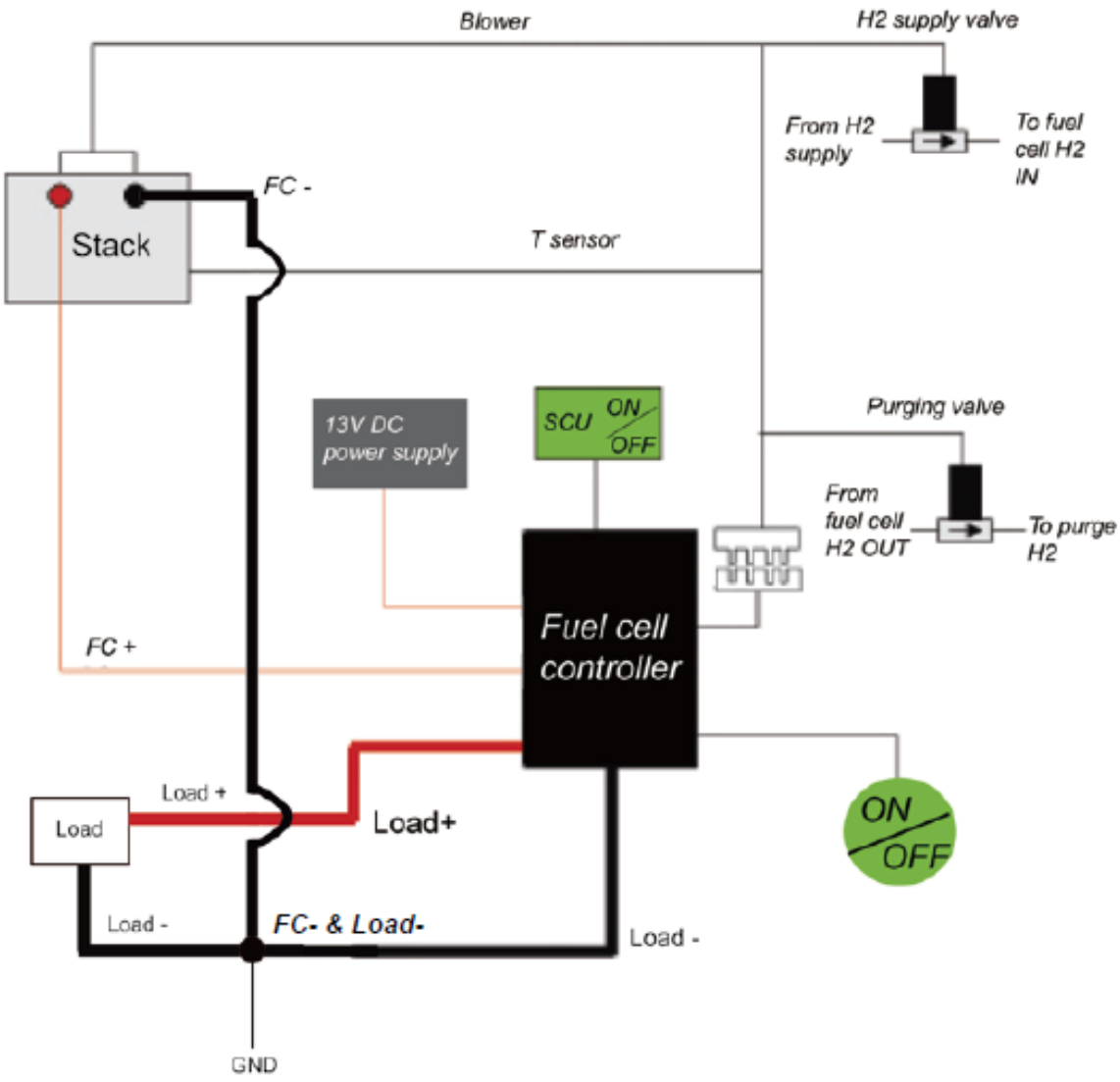

SCU: Short Circuit Unit
GND: Grounding

Figure 22. PEM Fuel Cell (Horizon, H-100) System Setup Diagram. Source: [32].

C. H-100: PERFORMANCE CHARACTERISTICS

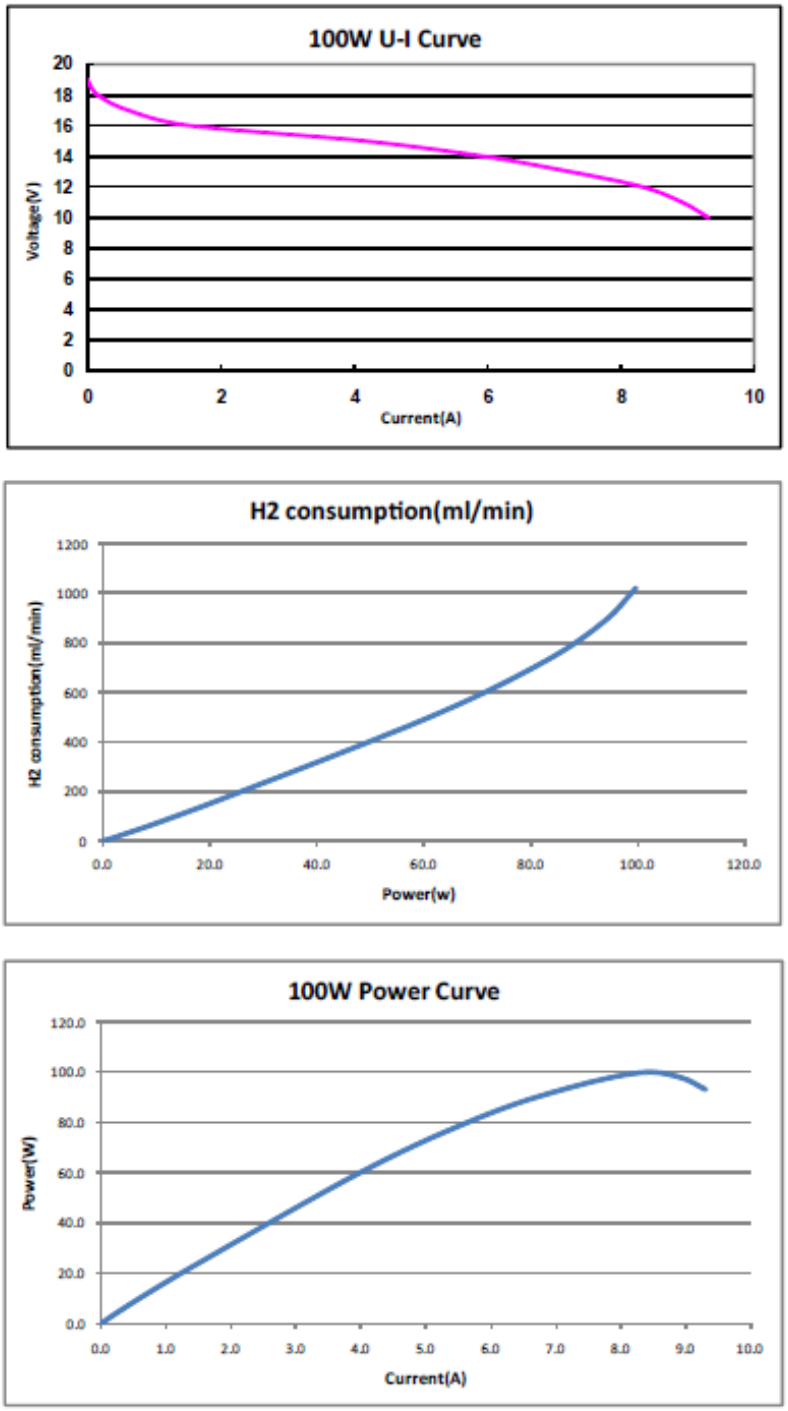

Figure 23. PEM Fuel Cell (Horizon, H-100) Performance Characteristics. Source: [32].

THIS PAGE INTENTIONALLY LEFT BLANK

APPENDIX J. PEM FUEL CELL (HORIZON, H-20) SPECIFICATIONS

Type of fuel cell	PEM
Number of cells	13
Rated Power	20W
Performance	7.8V @ 2.6A
Purging valve voltage	6V
Blower voltage	5V
Reactants	Hydrogen and Air
External temperature	5 to 30ºC
Max stack temperature	55ºC
H2 Pressure	0.45-0.55bar
Hydrogen purity	≧99.995% dry H2
Humidification	self-humidified
Cooling	Air (integrated cooling fan)
Weight (with fan & casing)	275 grams(±30 grams)
Controller	90 grams(±10 grams)
Dimension	7.5cmX4.7cmX7.0cm
Flow rate at max output*	0.28 L/min
Start up time	≦30S at ambient temperature
Efficiency of stack	40% @ at full power

*The flow rate may change with the power output
** The Specification is subject to change without notice.

Figure 24. PEM Fuel Cell (Horizon, H-20) Technical Specifications. Source: [33].

THIS PAGE INTENTIONALLY LEFT BLANK

APPENDIX K. PEM FUEL CELL (HORIZON, H-1000) SPECIFICATIONS

Type of fuel cell	PEM
Number of cells	48
Rated Power	1000W
Performance	28.8V @ 35A
H2 Supply valve voltage	12V
Purging valve voltage	12V
Blower voltage	12V
Reactants	Hydrogen and Air
External temperature	5 to 30ºC
Max. stack temperature	65ºC
H2 Pressure	0.45-0.55bar
Hydrogen purity	≧99.995% dry H2
Humidification	self-humidified
Cooling	Air (integrated cooling fan)
Stack weight (with fan & casing)	4000 grams(±100grams)
Controller weight	400 grams(±30grams)
Dimension	23.3cm x 26.8cm x 12.3cm
Flow rate at max output*	13 L/min
Start up time	≦30S at ambient temperature
Efficiency of stack	40% @ 28.8V
Low voltage shut down	24V
Over current shut down	42A
Over temperature shut down	65℃
External power supply**	13V(±1V),8A

The flow rate may change with the power output
****System electronics need external power supply***
***** The Specification is subject to change without notice.***

Figure 25. PEM Fuel Cell (Horizon, H-1000) Technical Specifications. Source: [34].

THIS PAGE INTENTIONALLY LEFT BLANK

APPENDIX L. PEM FUEL CELL (HORIZON, H-5000) SPECIFICATIONS

Type of fuel cell	PEM
Number of cells	120
Rated Power	5000W
Performance	72V @ 70A
H2 Supply valve voltage	12V
Purging valve voltage	12V
Blower voltage	24V
Reactants	Hydrogen and Air
External temperature	5 to 30ºC
Max stack temperature	65ºC
H2 Pressure	0.45-0.55bar
Hydrogen purity	≧99.995% dry H2
Humidification	self-humidified
Cooling	Air (integrated cooling fan)
Weight (with fan & casing)	30kg (±200g)
Controller	2.5kg (±100g)
Dimension	65cm x 35cm x 21.2cm
Flow rate at max output*	65 L/min
Start up time	≦30S at ambient temperature
Efficiency of stack	40% @ 72V
Low voltage shut down	60V
Over current shut down	90A
Over temperature shut down	65℃
External power supply**	24V(±1V), 8A~12A

** The flow rate may change with the power output*
*** System electronics need external power supply*
**** The Specification is subject to change without notice.*

Figure 26. PEM Fuel Cell (Horizon, H-5000) Technical Specifications. Source: [35].

THIS PAGE INTENTIONALLY LEFT BLANK

LIST OF REFERENCES

[1] U.S. Energy Administration, 2016, "Primary Energy Overview," http://www.eia.gov/beta/MER/index.cfm?tbl=T01.01#/?f=A

[2] U.S. Energy Administration, 2016, "U.S. Government Energy Consumption by Agency, Fiscal Years," http://www.eia.gov/beta/MER/ index.cfm?tbl=T02.07#/?f=A

[3] Castillo, A.S., and Brown, J. H., 2016, "Department of Defense Annual Energy Management Report—Fiscal Year 2015," RefID: 3–4DBD001, Office of the Assistant Secretary of Defense, Washington, DC.

[4] Office of the Assistant Secretary of Defense for Energy, Installations and Environment, 2015, "Department of Defense 2016 Operational Energy Strategy," RefID: 5–240277A, Office of the Assistant Secretary of Defense for Energy, Installations and Environment, Washington, DC.

[5] Office of the Under Secretary of Defense for Acquisition. Technology, and Logistics, 2015, "Fiscal Year 2015 Operational Energy Annual Report—Department of Defense," RefID: 2–7034F9F, Office of the Under Secretary of Defense for Acquisition. Technology, and Logistics, Washington, DC.

[6] Energy Policy Act of 2005, Pub. L. No. 109–58 § 203, 2005.

[7] Energy Performance Goals and Master Plan for the Department of Defense, 10 U.S.C. § 2911, 2010.

[8] RenewableEnergyWorld.com, n.d., "Types of Renewable Energy," http://www.renewableenergyworld.com/index/ tech.1.leftinheritedbottom_standard.html

[9] Office of Energy Efficiency & Renewable Energy, n.d., "Hydrogen Production Processes," U.S. Department of Energy, http://energy.gov/eere/fuelcells/ hydrogen-production-processes

[10] Office of Energy Efficiency & Renewable Energy, n.d., "Hydrogen Production Pathways," U.S. Department of Energy, http://energy.gov/eere/fuelcells/ hydrogen-production-pathways.

[11] Taylor W. R., Holcomb F. H. and Bush J., 2006, "Detailed Fuel Cell Demonstration Site Summary Report," ERDC/CERL TR-06-17, U.S. Army Corps of Engineers, Washington, DC.

[12] Office of Energy Efficiency & Renewable Energy, 2011, "Departments of Energy, Defense Partner to Install Fuel Cell Backup Power Units at Eight Military Installations," U.S. Department of Energy, http://www.energy.gov/eere/articles/departments-energy-defense-partner-install-fuel-cell-backup-power-units-eight-military

[13] Cox R., 2011, "Fuel Cells and Hydrogen Energy," Fuel Cell and Hydrogen Energy Association, http://www.dtic.mil/ndia/2011power/Session21_RUTHCox.pdf

[14] Office of Energy Efficiency & Renewable Energy, n.d., "DOE Technical Targets For Fuel Cell Backup Power Systems," U.S. Department of Energy, http://energy.gov/eere/fuelcells/doe-technical-targets-fuel-cell-backup-power-systems

[15] Link, L.E., 2016, "Energy Storage Innovation," The Military Engineer, 108(701), p. 49.

[16] Rubio, A., 2016, "PEM Fuel Cell Based Decentralized Micro-grid," SPAWAR, ESTEP Program Review—Proposal Presentations, San Diego, CA.

[17] Hydrogenious Technologies, 2016, "LOHC Technology," http://www.hydrogenious.net/en/technology/

[18] D. Smalley, 2012, "Energize: ONR Supports New Energy Partnership," Office of Naval Research, from http://www.onr.navy.mil/Media-Center/Press-Releases/2012/Energy-Systems-Technology-ESTEP-ONR.aspx

[19] Ciolkosz, D., n.d., "What is Renewable Energy?," Penn State College of Agricultural Sciences, http://extension.psu.edu/natural-resources/energy/what

[20] Jasso, B., 2015, "Comparison: Desiccant or Compressor Dehumidifier," AirNeeds.com, https://airneeds.com/comparision-desiccant-or-compressor-dehumidifier/

[21] Dehumidifier Web, n.d., "Eva-dry EDV 1100 Dehumidifier Review," http://www.dehumidifierweb.com/eva-dry-petite/

[22] Office of Energy Efficiency & Renewable Energy, n.d., "Hydrogen Production: Electrolysis," U.S. Department of Energy, http://energy.gov/eere/fuelcells/hydrogen-production-electrolysis

[23] Office of Energy Efficiency & Renewable Energy, n.d., "Hydrogen Production," U.S. Department of Energy, http://energy.gov/eere/fuelcells/hydrogen-production

[24] Office of Energy Efficiency & Renewable Energy, n.d., "Fuel Cells," U.S. Department of Energy, http://energy.gov/eere/fuelcells/fuel-cells

[25] Office of Energy Efficiency & Renewable Energy, n.d., "Types of Fuel Cells," U.S. Department of Energy, http://energy.gov/eere/fuelcells/types-fuel-cells

[26] Office of Energy Efficiency & Renewable Energy, n.d., "Comparison of Fuel Cell Technologies," U.S. Department of Energy, http://energy.gov/eere/fuelcells/comparison-fuel-cell-technologies

[27] Hybrid Hydrotech, 2013, "HydroTube Pricing and Performance," http://www.hybridhydrotech.com/12v%20Pricing/default.html

[28] Dell, S., 2016, Service & Technical Support at Hybrid Hydrotech, private communication.

[29] Eurelectric, 2003, "Efficiency in Electricity Generation," Union of the Electricity Industry. file:///C:/Users/aaviles.ERN.004/Downloads/EEGJulyrevisedFINAL1-2003-030-0548-2-.pdf

[30] Borgnakke, C., and Sonntag, R. E., 2009, Fundamentals of Thermodynamics, Wiley, Hoboken, NJ.

[31] Weather Underground, 2016, "Weather History for Monterey, CA," The Weather Company, https://www.wunderground.com/personal-weather-station/dashboard?ID=KCAMONTE57&scrollTo=historyTable#history/s20161031/e20161130/mmonth

[32] Fuelcellstore.com, 2014, "H-100 Fuel Cell Stack User Manual," Manual FCS-C100-V2.1-EN, http://fuelcellstore.com/fuel-cell-stacks/medium-power-fuel-cell-stacks/horizon-100watt-fuel-cell-h-100

[33] Fuelcellstore.com, 2011, "H-20 Fuel Cell Stack User Manual," Manual H-20-UM-V2.6-EN, http://www.fuelcellstore.com/manuals/horizon-pem-fuel-cell-h-20-manual.pdf

[34] Fuelcellstore.com, 2013, "H-1000 Fuel Cell Stack User Manual," Manual FCS-C1000-V1.1-EN, http://www.fuelcellstore.com/manuals/horizon-pem-fuel-cell-h-1000-manual.pdf

[35] Fuelcellstore.com, 2013, "5000W Fuel Cell Stack User Manual," Manual FCS-C5000-V1.2-EN, http://www.fuelcellstore.com/manuals/horizon-pem-fuel-cell-h-5000-manual.pdf

THIS PAGE INTENTIONALLY LEFT BLANK

INITIAL DISTRIBUTION LIST

1. Defense Technical Information Center
   Ft. Belvoir, Virginia

2. Dudley Knox Library
   Naval Postgraduate School
   Monterey, California