Calhoun: The NPS Institutional Archive

DSpace Repository

Theses and Dissertations | 1. Thesis and Dissertation Collection, all items

2017

Modernization of the transonic axial compressor test rig

Byrd, Andre E.

Monterey, California: Naval Postgraduate School

http://hdl.handle.net/10945/56876

This publication is a work of the U.S. Government as defined in Title 17, United States Code, Section 101. Copyright protection is not available for this work in the United States.

Downloaded from NPS Archive: Calhoun

Calhoun is the Naval Postgraduate School's public access digital repository for research materials and institutional publications created by the NPS community. Calhoun is named for Professor of Mathematics Guy K. Calhoun, NPS's first appointed -- and published -- scholarly author.

Dudley Knox Library / Naval Postgraduate School
411 Dyer Road / 1 University Circle
Monterey, California USA 93943

http://www.nps.edu/library

NAVAL POSTGRADUATE SCHOOL

MONTEREY, CALIFORNIA

THESIS

MODERNIZATION OF THE TRANSONIC AXIAL COMPRESSOR TEST RIG

by

Andre E. Byrd

December 2017

Thesis Advisor: Anthony Gannon
Co-Advisor: Garth Hobson

Approved for public release. Distribution is unlimited.

THIS PAGE INTENTIONALLY LEFT BLANK

REPORT DOCUMENTATION PAGE			Form Approved OMB No. 0704-0188
Public reporting burden for this collection of information is estimated to average 1 hour per response, including the time for reviewing instruction, searching existing data sources, gathering and maintaining the data needed, and completing and reviewing the collection of information. Send comments regarding this burden estimate or any other aspect of this collection of information, including suggestions for reducing this burden, to Washington headquarters Services, Directorate for Information Operations and Reports, 1215 Jefferson Davis Highway, Suite 1204, Arlington, VA 22202-4302, and to the Office of Management and Budget, Paperwork Reduction Project (0704-0188) Washington DC 20503.			
1. AGENCY USE ONLY ***(Leave blank)***	**2. REPORT DATE** December 2017	**3. REPORT TYPE AND DATES COVERED** Master's thesis	
4. TITLE AND SUBTITLE MODERNIZATION OF THE TRANSONIC AXIAL COMPRESSOR TEST RIG			**5. FUNDING NUMBERS**
6. AUTHOR(S) Andre E. Byrd			
7. PERFORMING ORGANIZATION NAME(S) AND ADDRESS(ES) Naval Postgraduate School Monterey, CA 93943-5000			**8. PERFORMING ORGANIZATION REPORT NUMBER**
9. SPONSORING /MONITORING AGENCY NAME(S) AND ADDRESS(ES) N/A			**10. SPONSORING / MONITORING AGENCY REPORT NUMBER**
11. SUPPLEMENTARY NOTES The views expressed in this thesis are those of the author and do not reflect the official policy or position of the Department of Defense or the U.S. Government. IRB number ___N/A___.			
12a. DISTRIBUTION / AVAILABILITY STATEMENT Approved for public release. Distribution is unlimited.			**12b. DISTRIBUTION CODE**

13. ABSTRACT (maximum 200 words)

This work presents the design and simulation process of modernizing the Naval Postgraduate School's transonic compressor test rig (TCR). The TCR, which exists primarily for the purpose of testing axial fans at engine test speeds, is driven by an air driven turbine that is in turn driven by a twelve-stage compressor that consumes 1 MW of electric power. This work seeks improved efficiency and decreased maintenance requirements in the system by replacing the turbine drive with an electric drive train. The replacement of the turbine is the first phase in replacing various components of the TCR system, which was built in 1968, with 21st century technology.

Solid modeling software was used to accurately create three-dimensional models of the new test rig base, electric drive train housing, and other necessary components. These models were used to fabricate the materials. Stiffness tests and modal analysis were conducted via Finite Element Analysis (FEA) software. This analysis was used to design several iterations of the system. Experimental testing and observation of the system will start once building is complete.

14. SUBJECT TERMS transonic axial compressor test rig			**15. NUMBER OF PAGES** 61
			16. PRICE CODE
17. SECURITY CLASSIFICATION OF REPORT Unclassified	**18. SECURITY CLASSIFICATION OF THIS PAGE** Unclassified	**19. SECURITY CLASSIFICATION OF ABSTRACT** Unclassified	**20. LIMITATION OF ABSTRACT** UU

NSN 7540-01-280-5500

Standard Form 298 (Rev. 2-89)
Prescribed by ANSI Std. 239-18

THIS PAGE INTENTIONALLY LEFT BLANK

Approved for public release. Distribution is unlimited.

MODERNIZATION OF THE TRANSONIC AXIAL COMPRESSOR TEST RIG

Andre E. Byrd
Lieutenant, United States Navy
B.A, United States Naval Academy, 2011

Submitted in partial fulfillment of the
requirements for the degree of

MASTER OF SCIENCE IN MECHANICAL ENGINEERING

from the

NAVAL POSTGRADUATE SCHOOL
December 2017

Approved by: Anthony Gannon
Thesis Advisor

Garth Hobson
Co-Advisor

Garth Hobson
Chair, Department of Mechanical and Aerospace Engineering

THIS PAGE INTENTIONALLY LEFT BLANK

ABSTRACT

This work presents the design and simulation process of modernizing the Naval Postgraduate School's transonic compressor test rig (TCR). The TCR, which exists primarily for the purpose of testing axial fans at engine test speeds, is driven by an air driven turbine that is in turn driven by a twelve-stage compressor that consumes 1 MW of electric power. This work seeks improved efficiency and decreased maintenance requirements in the system by replacing the turbine drive with an electric drive train. The replacement of the turbine is the first phase in replacing various components of the TCR system, which was built in 1968, with 21st century technology.

Solid modeling software was used to accurately create three-dimensional models of the new test rig base, electric drive train housing, and other necessary components. These models were used to fabricate the materials. Stiffness tests and modal analysis were conducted via Finite Element Analysis (FEA) software. This analysis was used to design several iterations of the system. Experimental testing and observation of the system will start once building is complete.

THIS PAGE INTENTIONALLY LEFT BLANK

TABLE OF CONTENTS

I. INTRODUCTION 1

II. ELECTRIC MOTOR ADVANTAGES 3
- A. MOTOR SPECIFICS 3
- B. ADVANTAGES 4
  - 1. Speed Control 4

III. DESIGN PROCESS 11
- A. OVERVIEW 11
  - 1. The Outline of Design 11
  - 2. Process 11
- B. MODAL ANALYSIS 13
  - 1. System Modification 1 18
  - 2. System Modification 2 20
  - 3. System Modification 3 22
  - 4. System Modification 4 24

IV. DISCUSSION/CONCLUSION 27
- A. ELECTRIC MOTOR HOUSING INTEGRATION 27
- B. MODAL ANALYSIS 27

V. FUTURE WORK 29
- A. INTRODUCE MAGNETIC BEARINGS 29
- B. MODERNIZE ORIGINAL TCR 29

APPENDIX. A ANSYS REPORT MATERIAL DATA 31

APPENDIX. B. OTHER MODE SHAPES 33

APPENDIX. C ENGINEERING DRAWINGS 41

LIST OF REFERENCES 45

INITIAL DISTRIBUTION LIST 47

THIS PAGE INTENTIONALLY LEFT BLANK

LIST OF FIGURES

Figure 1. AMB Shaft Cutaway. Source: [3]. 3

Figure 2. TCR Manual Control Unit 5

Figure 3. Typical VSD. Source: [5]. 6

Figure 4. Current TCR Setup. Source: [6]. 7

Figure 5. 1000 kW Allison Chamber Compressor 7

Figure 6. 500 kW Elliot Compressor 8

Figure 7. Electric Motor Engineering Drawing 12

Figure 8. Motor Housing 13

Figure 10. Mesh for Modal Analysis 16

Figure 11. Fixed Supports 16

Figure 12. Motor Housing Deflection 17

Figure 13. Natural Frequencies Chart 17

Figure 14. Added Beam Modification 19

Figure 15. Motor Housing Deflection with Beam 19

Figure 16. Natural Frequencies Chart 20

Figure 17. Beam modification 21

Figure 18. Motor Housing Deflection with Beam Modification 21

Figure 19. Natural Frequencies Chart 22

Figure 20. Second Beam Modification 23

Figure 21. Motor Housing Deflection Second Beam Modification 23

Figure 22. Natural Frequencies Chart 24

Figure 23. Test Rig with Compressor Inlet 25

Figure 24. Deflection with Compressor Inlet 25

Figure 25. Natural Frequencies Chart 26

THIS PAGE INTENTIONALLY LEFT BLANK

LIST OF TABLES

Table 1. ANSYS Workbench Mesh Statistics for Modal Analysis 15

Table 2. Mode Deflections No Beam 18

Table 3. Mode Deflections with Beam 20

Table 4. Mode Deflections with Beam Modification 22

Table 5. Mode Deflections Angle Beam 24

THIS PAGE INTENTIONALLY LEFT BLANK

I. INTRODUCTION

"Since 1968, the Naval Postgraduate School (NPS) transonic compressor test rig (TCR) has served as a test system for the development of innovative flow measurement instruments as well as a means for graduate students to gain experience in the operation and testing of high speed compressors" [1]. The test rig consists of a test compressor driven by two opposed-rotor air turbine stages, supplied by a 12-stage Allis-Chalmers axial compressor [2]. The test rig is also supplied by a 500 kW Elliot Compressor, which manipulates the balance piston on the shaft. This study involves the design, simulation and building of a modern test rig in which the test compressor is driven by an electric motor vice a turbine drive. Replacement of the turbine drive will provide improved system efficiency, lower maintenance expenditures, and better speed control. The new test rig with fully integrated electric motor was modeled using solid modeling software. These models were used to perform a modal analysis for the system to find possible resonant frequencies that could interfere with experiments. Experimental testing of the new system will be done in a cell adjacent to the current test rig cell providing the ability to continue testing with the original system during construction and commissioning of the new system.

THIS PAGE INTENTIONALLY LEFT BLANK

II. ELECTRIC MOTOR ADVANTAGES

A. MOTOR SPECIFICS

The motor used in this study utilizes active magnetic bearings (AMBs). As noted in the white paper produced by Dresser-Rand, an "AMB uses electromagnetic forces to levitate the shaft in space, and maintains its position by actively controlling the electromagnets, leaving zero contact between the bearing and the rotating mass" [3]. As seen in Figure 1, stationary electromagnets are positioned around the rotor [3]. The Dresser-Rand white paper points out that "two radial magnetic bearings are used to support and position the shaft in the radial directions and one thrust bearing is used to support and position the shaft along the axial direction" [3]. The white paper continues by stating that "AMBs have been in use for almost 50 years, although in the past size and complexity have limited their implementation" [3]. "The advent of modern solid state electronics makes it possible to drive these motors at variable speed" [4].

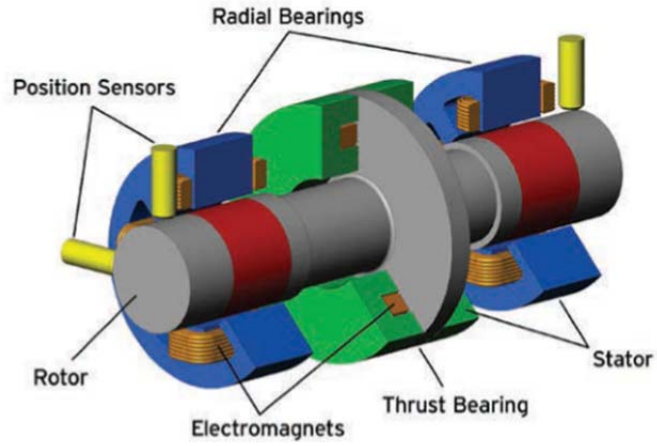

Figure 1. AMB Shaft Cutaway. Source: [3].

B. ADVANTAGES

1. Speed Control

The current TCR is operated under manual control from a control room outside the compressor test cell. The control unit is depicted in Figure 2. The Allison Chalmers and Elliot Compressors, which drive the turbine and balance piston, respectively, must continuously operate at full speed while in use. Turbine shaft speed is therefore manipulated by an electrically actuated butterfly dump valve that controls air flow rate to the turbine. A rotating-plate throttle is used to regulate the air flow to the balance piston. Air flow provided to the balance piston is adjusted as turbine shaft speed increases. Attaining a desired TCR speed therefore involves adjusting a series of dump valves and a TCR throttle valve. Once a desired speed is reached, the throttle valve is closed until the system stalls. When stall occurs, the throttle is opened slightly to stabilize the compressor, and then closed again to closely approach the stall condition. During stall, speed spikes by approximately 10% over a duration of roughly a couple of seconds. During each test rig run these valves are continuously manually adjusted to compensate for stall conditions and speed control.

In contrast, the new TCR system will adjust the electric motor shaft speed using a Variable Speed Drive (VSD). A depiction of a typical VSD is shown in Figure 3. A VSD adjusts desired motor speed and torque by digitally manipulating the frequency input into the system. The new TCR system requires no valves or throttles to control shaft speed making speed control much more simple and reliable. More importantly, constant speed control is expected to be able to be maintained during future stall operation and testing of research compressors.

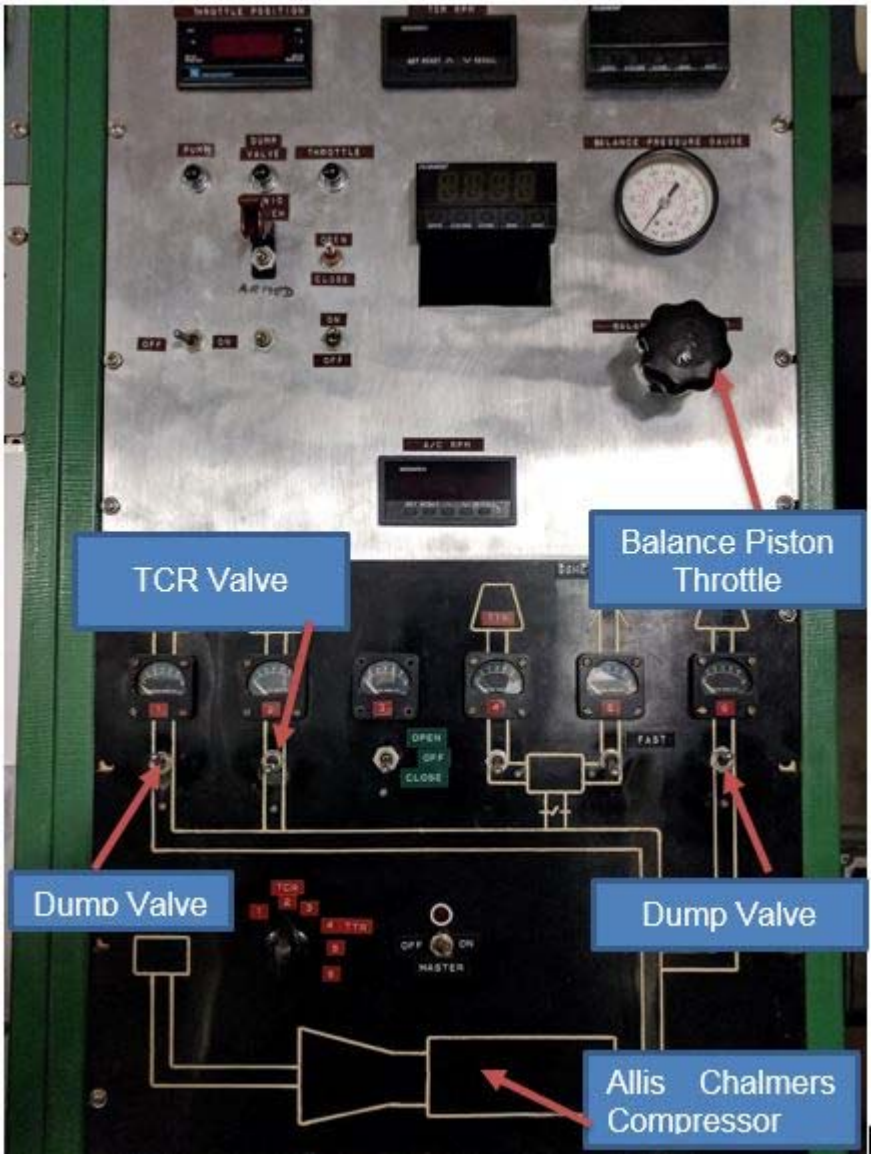

Figure 2. TCR Manual Control Unit

Figure 3. Typical VSD. Source: [5].

(1) Simplicity, Reliability, Power Usage

Another advantage of the new TCR is that it will require significantly less equipment to operate. A schematic of the current TCR setup is shown in Figure 4. The Allison Chalmers and Elliot compressor systems are shown in Figures 5 and 6, respectively.

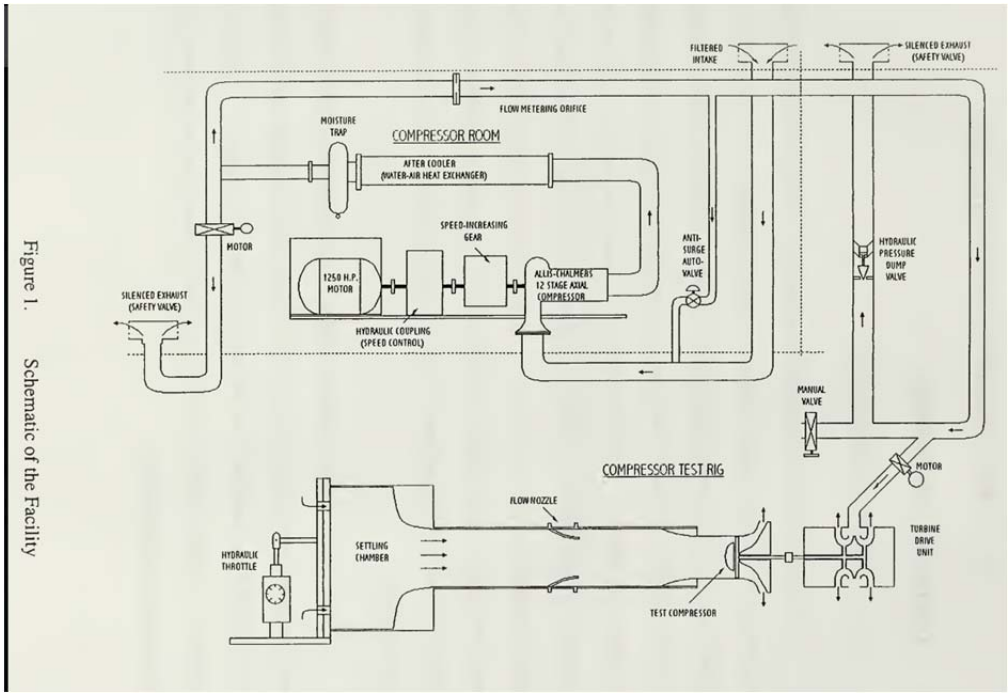

Figure 4. Current TCR Setup. Source: [6].

Figure 5. 1000 kW Allison Chamber Compressor

Figure 6. 500 kW Elliot Compressor

The whole compressor room, which includes the 1000 kW Allison Chalmers compressor, a silenced exhaust valve, compressor intake, and hydraulic pressure dump valve, is no longer necessary to drive the TCR. This compressor room will be replaced by a 300 kW electric motor and VSD that will be located inside the test cell. The VSD will be controlled from outside of the test cell. In addition, the 500 kW Elliot compressor will be replaced by a 300 kW compressor operated also by VSD located in another test cell. The power required to operate the new TCR will be more than halved compared to the current TCR. Also, the constant 1500 kW of power input into the current TCR system only produced 300 kW of power at the shaft. That is less than 30 percent efficiency. The electric motor for the new TCR system is expected to operate at above 90 percent efficiency. This increase in efficiency translates to a great deal of money saved on energy expenditures. “In regard to reliability, the number of start and stop processes within a short time is almost only limited by the cooling

capacity of the VSD and motor" [7]. As a result, there is almost no limit to how often the system can be operated in any particular day. In contrast, the current test rig requires 30 minutes from start up to reach stability conditions before experimentation.

(2) Maintenance

Most maintenance improvements in the new system stem from a simpler system. In addition, replacing the turbine drive with an electric motor drive relieves some maintenance requirements. There have been two instances at the Naval Postgraduate School in which the turbine bearings needed to be replaced due to their catastrophic failure. The magnetic bearings located inside the electric motor will never need to be replaced because there is no metal-to-metal contact between stationary and rotating components.

THIS PAGE INTENTIONALLY LEFT BLANK

III. DESIGN PROCESS

A. OVERVIEW

1. The Outline of Design

- Model the test rig base in Solidworks
- Design motor housing and integrate into TCR system
- Simulate Modal Analysis of system in ANSYS
- Modify system as needed

2. Process

The first step in the process was to determine the structure of the test rig base. It was decided that the new system design will have the same base as the original design. The initial test rig base design was depicted in engineering drawings created by the laboratory founder Dr. Varvra in the 1960s. These drawings were converted into electronic solid models to make design and modeling simpler for the new test rig. ANSYS workbench 16.2 was used for modal analysis simulation. Manufacturing is currently in process and fabrication of the final assembly will be completed at a later date.

Once modeling of the test rig base was complete, modeling and integration of the electric motor and mounting flange was conducted. The electric motor train was placed in the position that the turbine occupied in the original configuration. All turbine parts from the original design were removed with the exception of the face of the turbine inlet housing. The face of the turbine inlet housing was modified to attach the front face of the electric motor via a ring of bolts. The ring of bolts on the face of this particular motor usually serves the purpose of connecting an exhaust volute for the test compressor. However, in this system, these bolts will be used to connect to the turbine inlet housing to produce added stability, while most of the weight and torque created from the motor will be absorbed through bolts attached to the motor feet. Next, a three-sided box was designed to provide a frame for the motor to be placed in. This

box is to be welded to the turbine inlet face. The top and back faces of the motor were left exposed to facilitate convenient system disassembly. An engineering drawing with units in mm of the electric motor is shown in Figure 7. A solid model depiction of the motor housing is shown in Figure 8. The side plates of the housing were cut away at 40-degree angle to remove any unnecessary weight from the system. The motor housing will be welded to the support plate, which is then bolted to the TCR base.

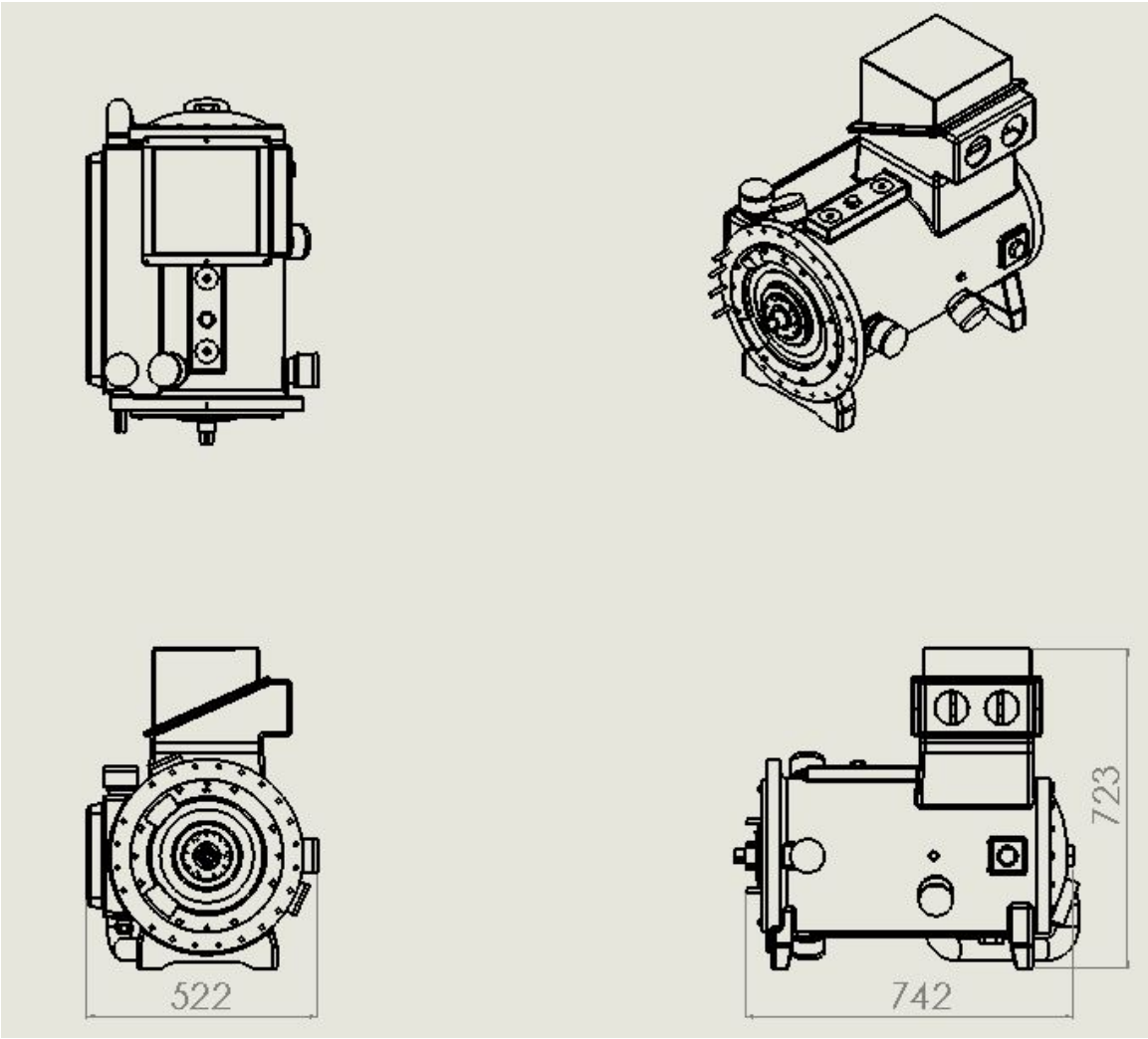

Figure 7. Electric Motor Engineering Drawing

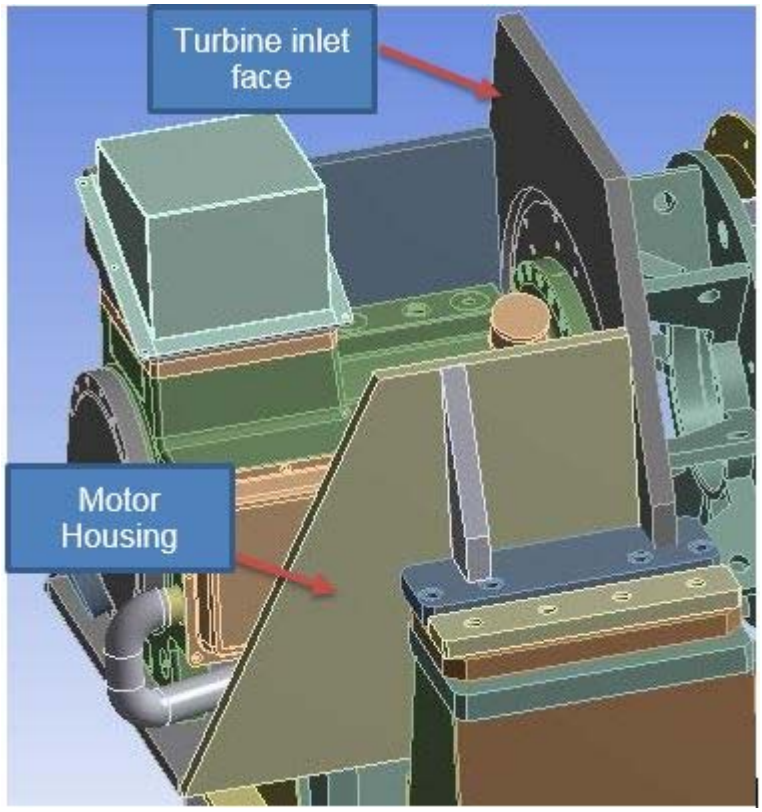

Figure 8. Motor Housing

A modal analysis was conducted once the system modeling was completed. The modal analysis provides the frequencies that need to be avoided during testing. Therefore, it is profitable to observe how the newly integrated motor housing affects the natural frequencies of the system to ensure the system is not operating at resonance during experimentation. Also, a visual simulation of the modes of the system provides details on system vibration and deflection at specific frequencies. Observing the deflection of the back of the motor housing was paramount with the understanding that it protrudes past the back plates on the test rig base.

B. MODAL ANALYSIS

An initial modal analysis was conducted using the Modal module in ANSYS Workbench. Material properties for structural steel were selected to initiate the module. The test rig file from SolidWorks was used to generate the

geometry file input for the Modal module. This solid model is shown in Figure 9. Several inner components of the solid model were suppressed or made invisible to the ANSYS Mechanical Model for two reasons. One reason was that some components were duplicated when rebuilt in ANSYS. These duplicates had “zero size” and could not be computed by the ANSYS solver. Secondly, suppressing several of the inner components of the system facilitated more efficient computations. Due to the small size and placement of these components, neither the accuracy of the modal analysis nor the structural integrity of the modal model was affected by their suppression. With the geometry inputted into the Modal module a mesh was created using the Mechanical Model in ANSYS Workbench (Figure 10). A coarse physical mesh was used with Mesh Statistics listed in Table 1.

The default stiffness factor for each contact region of the model was 1. The solver would not provide a solution at this default setting because total contact stiffness of the modal model was out of tolerance. The solution for this problem was to manually change the contact stiffness factor to .01 for all contact regions of the model. A contact region is an area where two bodies are in contact with one another. The ANSYS training manual states that “In a physical sense, contact bodies do not interpenetrate” [8]. The contact stiffness factor drives the amount of interpenetration between contact bodies during analysis [8]. The higher the contact stiffness, the lower the penetration [8]. For this model, higher penetration was accepted to enable the problem to converge and provide a solution.

Next, boundary conditions of the system were established. Fixed supports were inserted in the model at the eight square plates attached to the base of the test rig. This is shown in Figure 11. Analysis settings were modified to observe the first 20 modes of the system. The deflection observed in the model, particularly in the motor housing, showed to be too great. A snapshot of deformation is shown in Figure 12. These results led to the production of a second iteration of the model. Natural frequencies are shown in Figure 13.

Modes that were of particular interest based on the affected location and their deformation are shown in Table 2.

Table 1. ANSYS Workbench Mesh Statistics for Modal Analysis

Physics Preference	Sizing Relevance Center	Nodes	Elements
Mechanical	Coarse	2,201,303	1,227,984

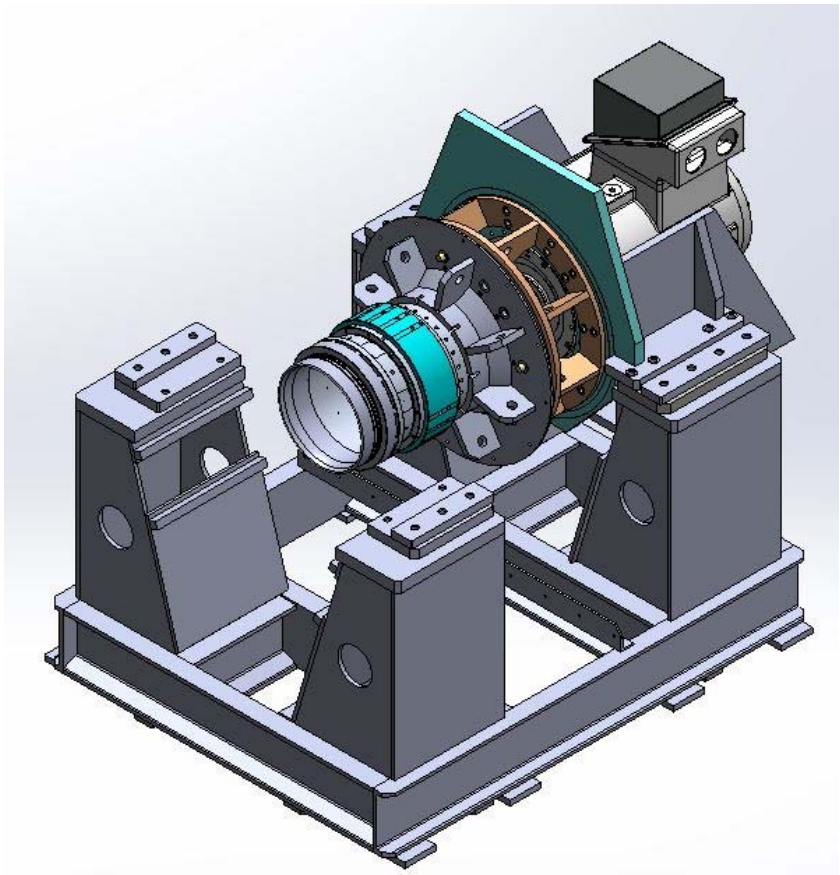

Figure 9. Solid Model of the Test Rig Assembly

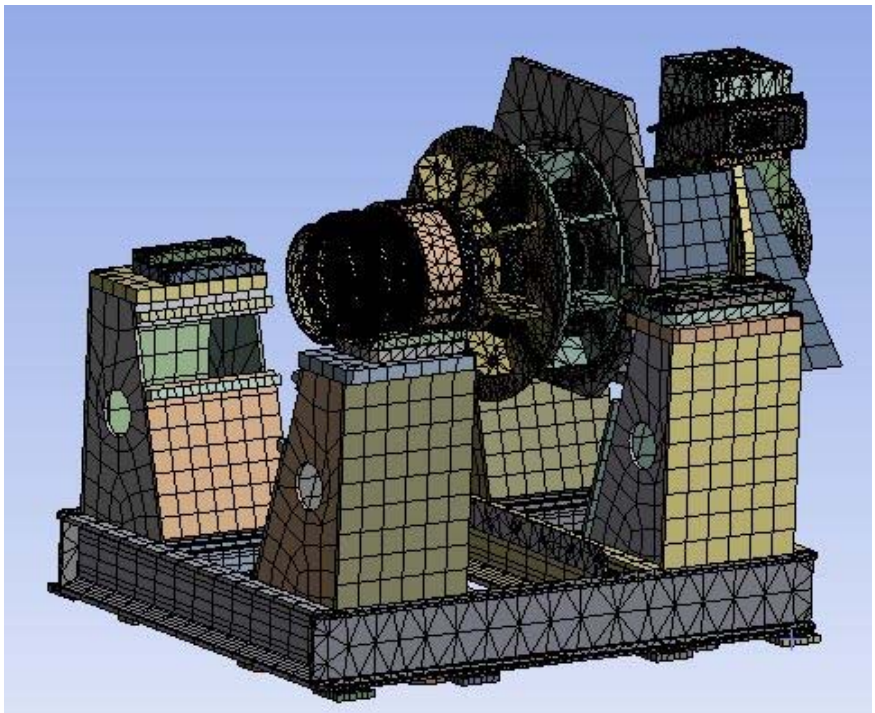

Figure 10. Mesh for Modal Analysis

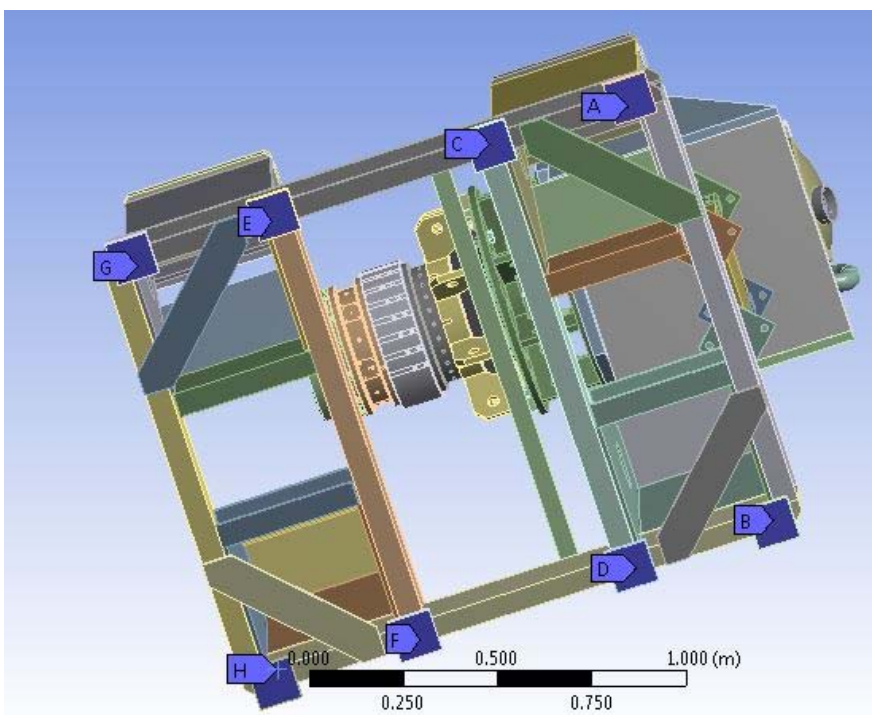

Figure 11. Fixed Supports

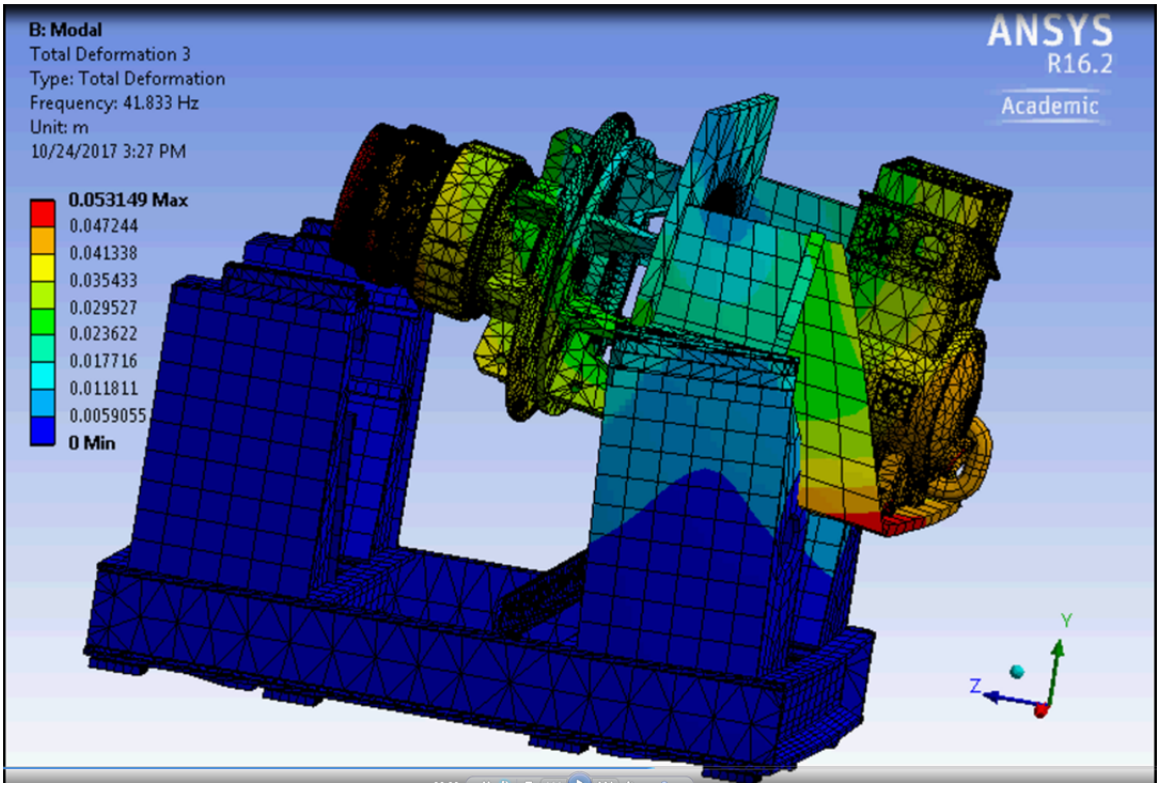

Figure 12. Motor Housing Deflection

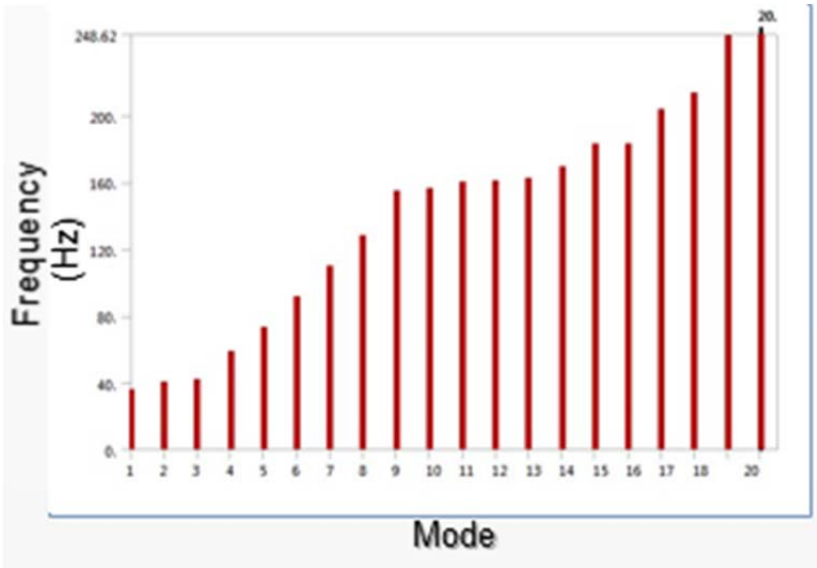

Figure 13. Natural Frequencies Chart

Table 2. Mode Deflections No Beam

Mode	1	2	3	4
Max Deflection	2.5	5.7	5.3	4.5
Location	Electric Motor Housing			
Mode	5	16	17	18
Max Deflection	4.0	6.2	14.7	14.3
Location	Electric Motor Housing			

1. System Modification 1

A steel beam was added to the system connecting the rig base to the bottom plate of the motor housing. The beam was added to provide stiffness to the system because the natural frequencies in the original model were too low. The modification is depicted in Figure 14. A snapshot of deformation is shown in Figure 15. This addition of the beam slightly changed the natural frequencies of the system. Some frequencies were higher than the original and others were lower than the original model. Mode 3 deformation is found in Figure 16. This modification produced a slight reduction of deformation of the system. Deformation results are shown in Table 3.

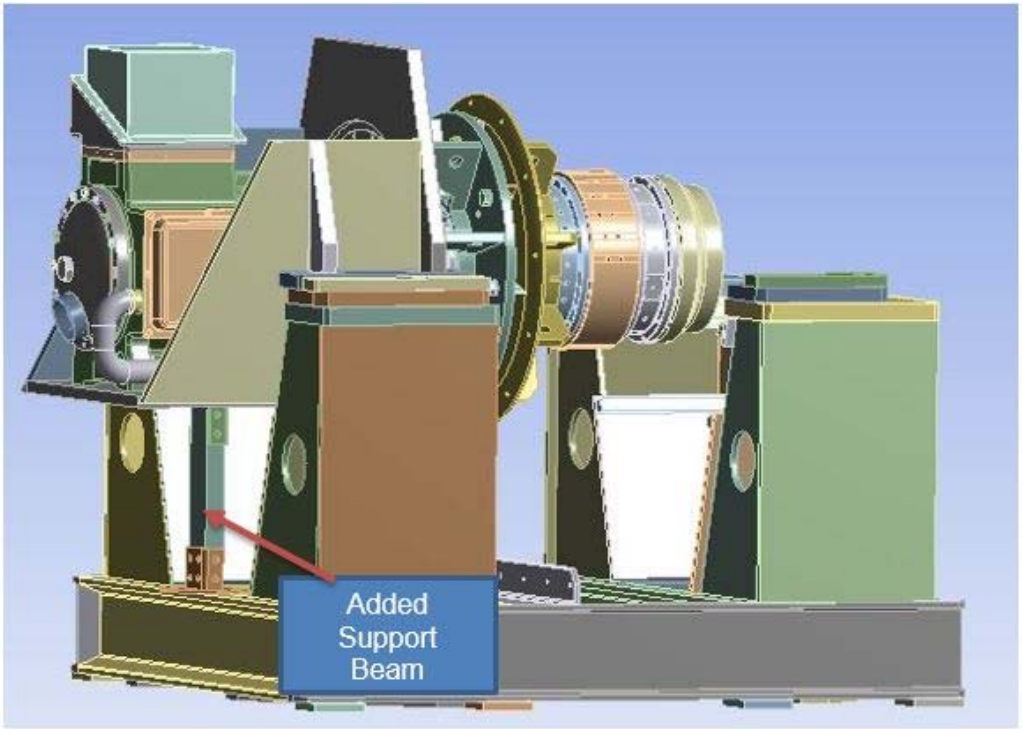

Figure 14. Added Beam Modification

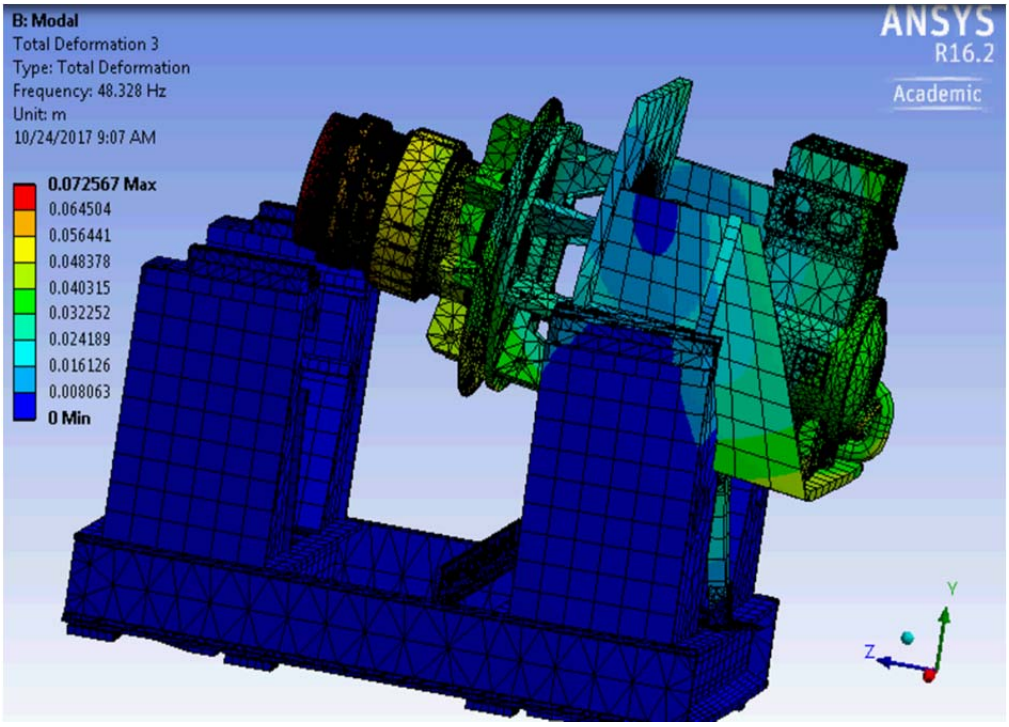

Figure 15. Motor Housing Deflection with Beam

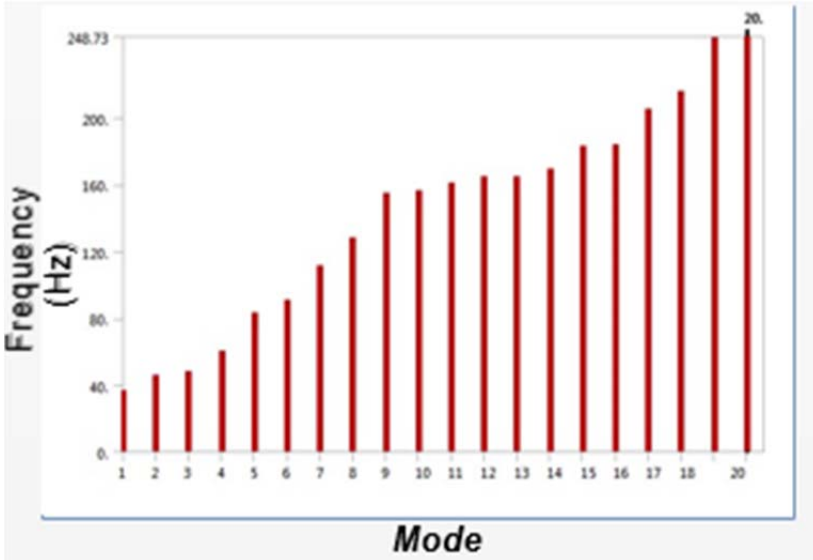

Figure 16. Natural Frequencies Chart

Table 3. Mode Deflections with Beam

Mode	1	2	3	4
Max Deflection	4.0	5.5	4.0	4.5
Location	Electric Motor Housing			
Mode	5	16	17	18
Max Deflection	5.1	4.1	3.2	14.5
Location	Electric Motor Housing			

2. System Modification 2

In this modification the width of the steel support beam was altered from 8.26 cm to 31.75 cm. The support beam width was modified to increase the stiffness of the system and to decrease the deflection of the electric motor housing during specific natural frequencies. This modification is shown in Figure 17. A snapshot of mode 5 deformation is shown in Figure 18. There were no

major changes to the system natural frequencies. Natural frequency information is found in Figure 19. Deformation results are shown in Table 4.

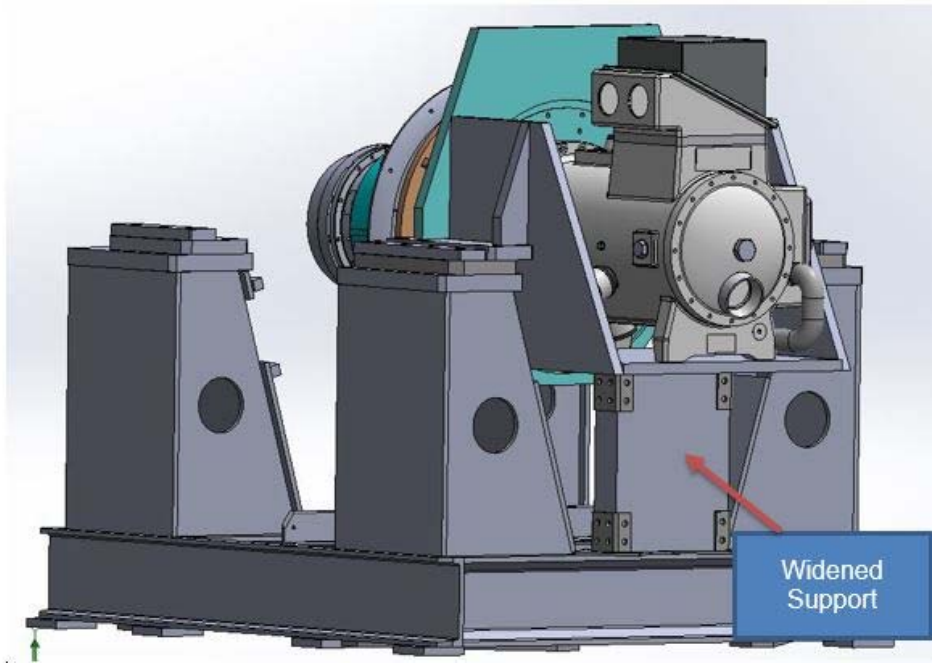

Figure 17. Beam modification

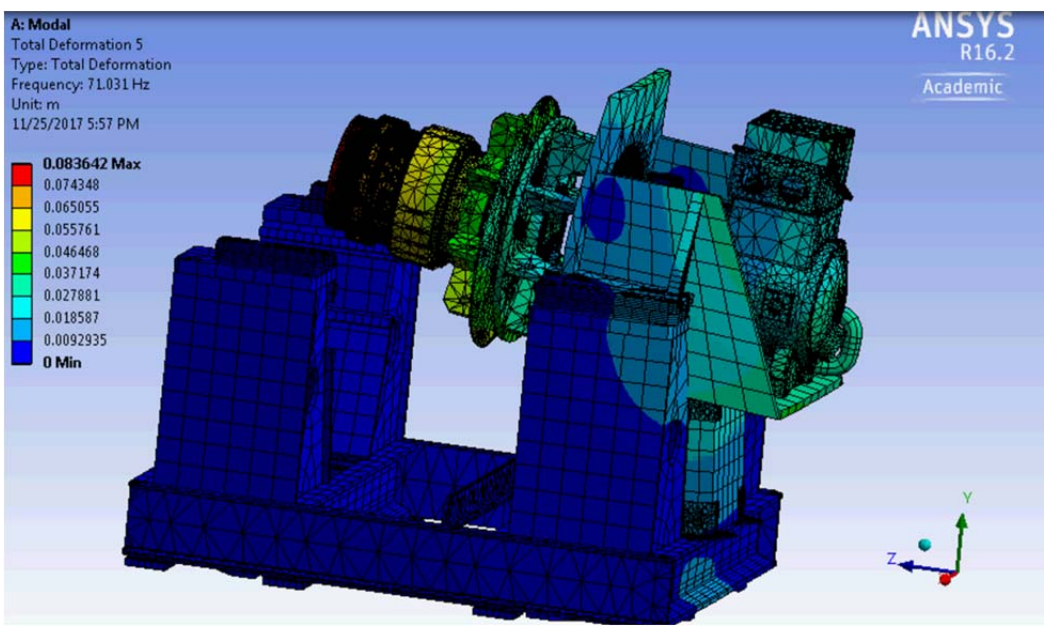

Figure 18. Motor Housing Deflection with Beam Modification

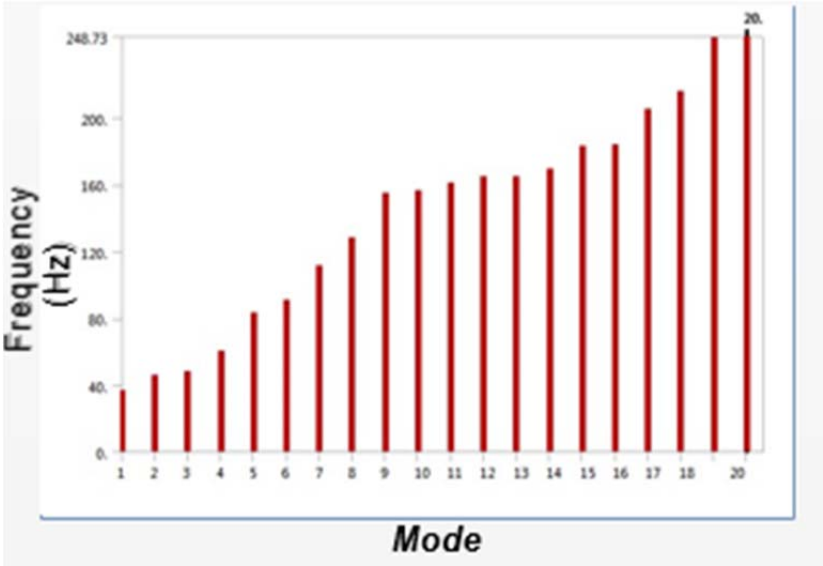

Figure 19. Natural Frequencies Chart

Table 4. Mode Deflections with Beam Modification

Mode	1	2	3	4
Max Deflection	1.2	0.5	0.5	2.7
Location	Electric Motor Housing			
Mode	5	16	17	18
Max Deflection	3.5	9.24	7.0	16.0
Location	Electric Motor Housing			

3. System Modification 3

This modification altered the angle of the support beam so that the end of the electric motor housing would be supported. This modification was made to further reduce the deflection of the electric motor housing. The Solidworks model of this modification is shown in Figure 20. There were no major changes to the system natural frequencies. A snapshot of the mode 6 deformation is shown in Figure 21. Natural frequency information is found in Figure 22. Deformation results are shown in Table 5.

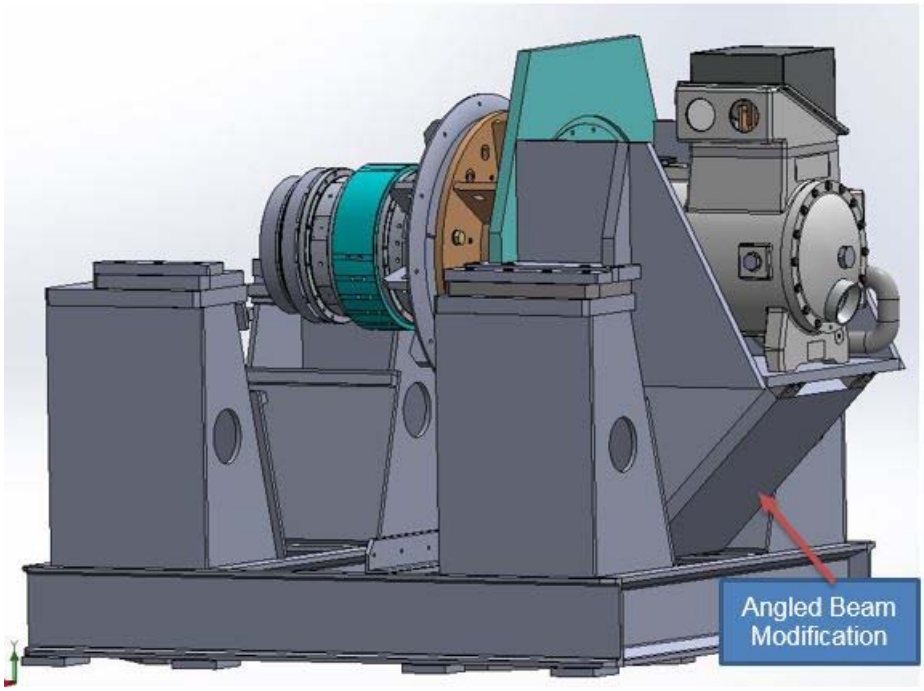

Figure 20. Second Beam Modification

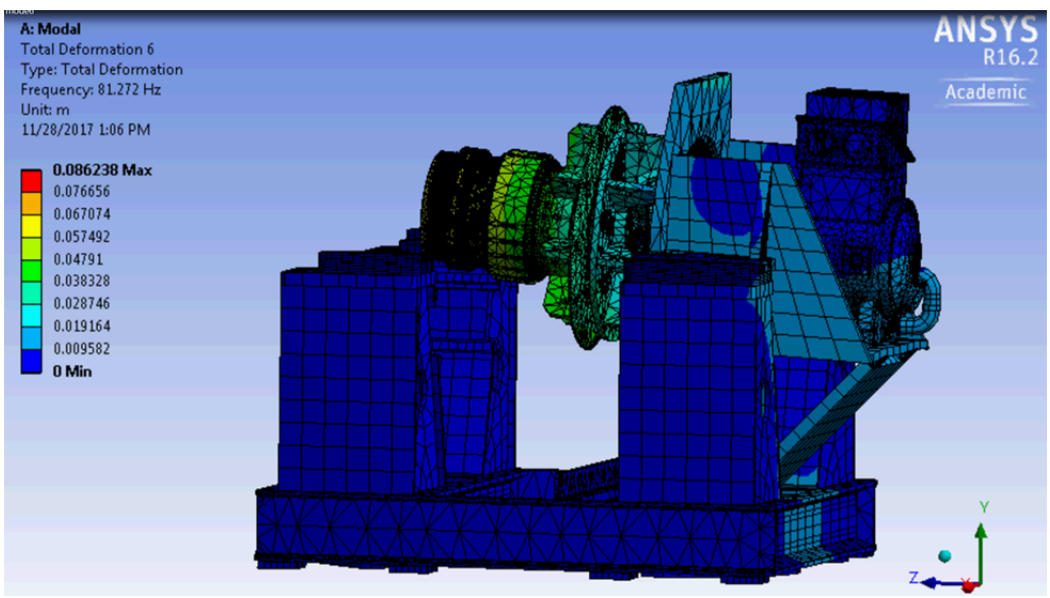

Figure 21. Motor Housing Deflection Second Beam Modification

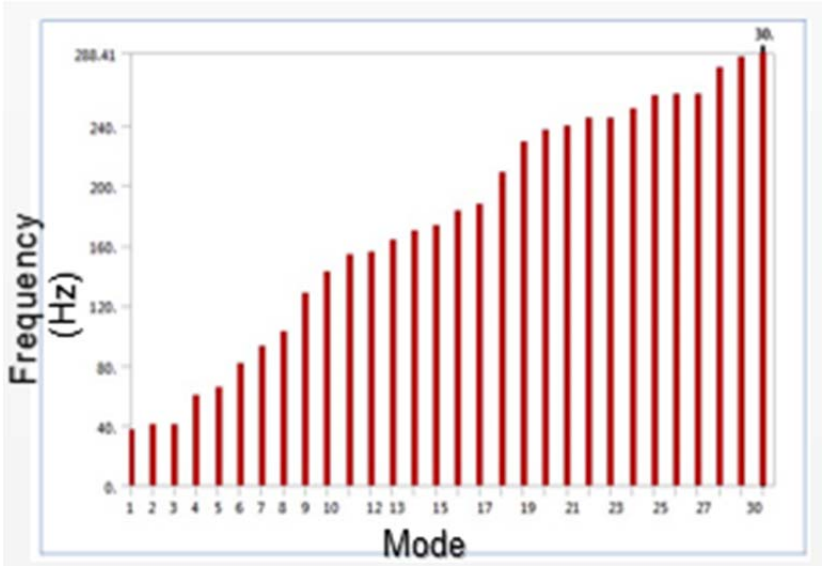

Figure 22. Natural Frequencies Chart

Table 5. Mode Deflections Angle Beam

Mode	1	2	3	4
Max Deflection	0.83	5.5	7.3	5.0
Location	Electric Motor Housing			
Mode	5	16	17	18
Max Deflection	5.1	9.24	14.3	14.5
Location	Electric Motor Housing			

4. System Modification 4

Lastly, a compressor inlet component was added to the model. This was a more accurate model because the test rig is rarely run without the compressor inlet. This modification was made to increase the system natural frequencies. The Solidworks model of this modification is shown in Figure 23. A snapshot of the mode 3 deformation is shown in Figure 24. Natural frequency information is found in Figure 25. The natural frequency of mode 1 increased by over 15 percent.

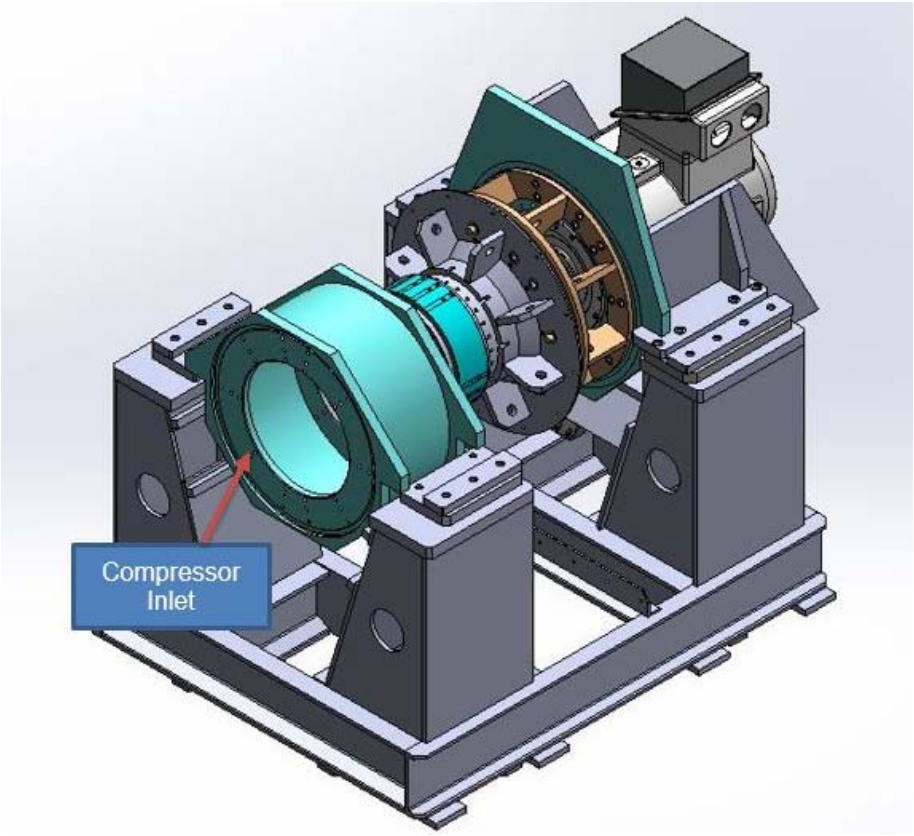

Figure 23. Test Rig with Compressor Inlet

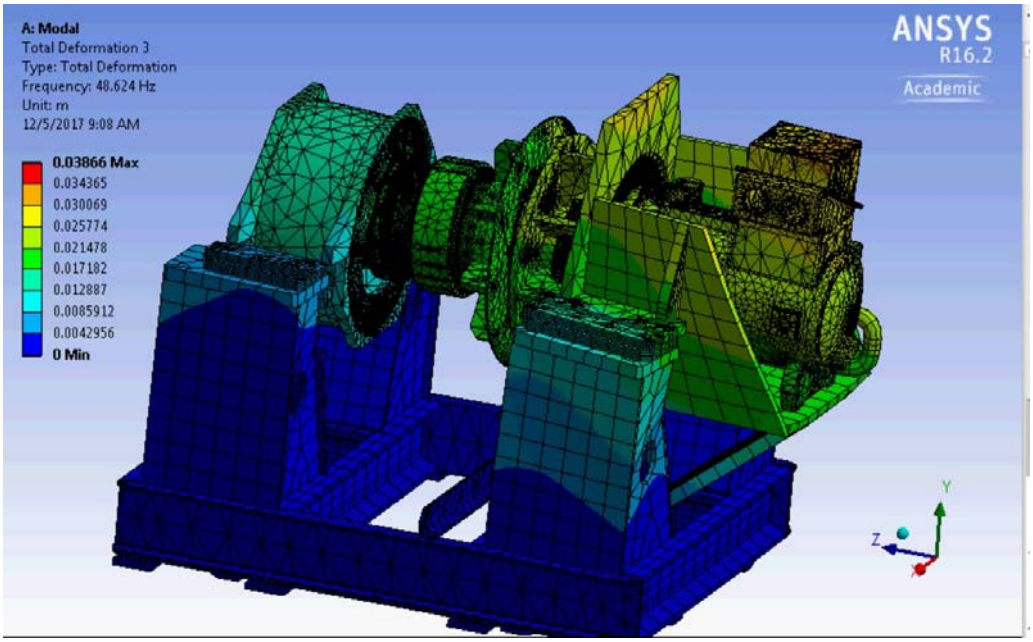

Figure 24. Deflection with Compressor Inlet

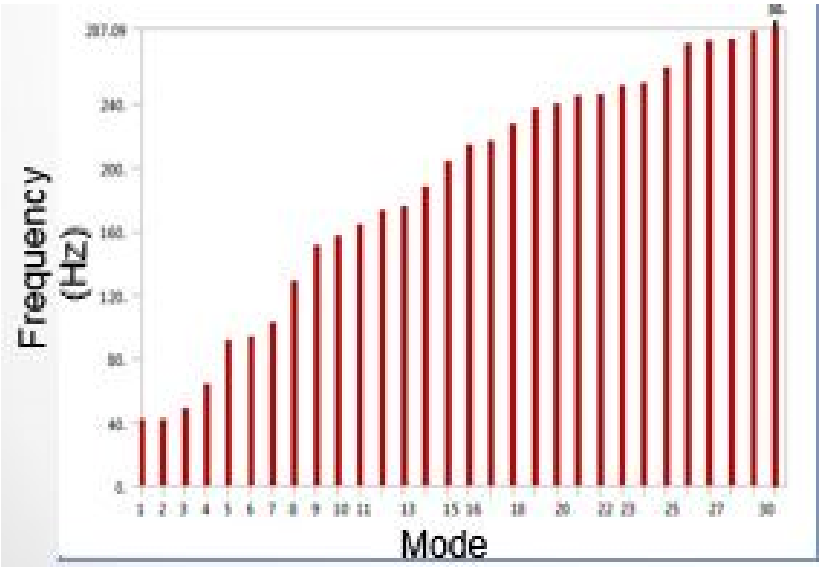

Figure 25. Natural Frequencies Chart

IV. DISCUSSION/CONCLUSION

A. ELECTRIC MOTOR HOUSING INTEGRATION

Converting the original paper engineering drawings of the base of the TCR into electronic models will prove beneficial throughout the modernization process. These models provided the ability to simulate the integration of an electric motor into the test rig system. The housing for the electric motor needed to be adjustable and maintain the capability to seamlessly rotate with the upstream components of the test rig that remained unchanged from the original test rig design. Through modeling, it has been shown that there must be some type of beam that connects the motor housing to the rig base to provide the proper stiffness. The last system modification, which supported the back end of the electric motor housing due to the support beams angular position, proved to reduce the deflection of the motor housing the most.

B. MODAL ANALYSIS

After many simulations, it was concluded that neither the support beam's size or placement drastically altered the natural frequencies of the system. The addition of the compressor inlet into the model did, however, change the mode 1 natural frequencies by over 15 percent. Mode 1 is most important, because it is the frequency that is most easily excited. Also, any multiples of this natural frequency are possibly of concern, so it is beneficial to increase the magnitude of this frequency as much as possible. The lack of change in natural frequencies throughout the first two modifications could be attributed to the support beam's small size in comparison to the overall size of the test rig. The modal analysis simulation provided a greater understanding of what frequencies to avoid while testing. This information is vitally beneficial to prolonging the lifetime of the system.

THIS PAGE INTENTIONALLY LEFT BLANK

V. FUTURE WORK

A. INTRODUCE MAGNETIC BEARINGS

There will be more opportunities to implement magnetic bearings into the system as the size of the bearings is reduced. One advantage that mechanical bearings have over magnetic bearings is they can be inexpensively scaled down to very small sizes, making them a more feasible product for rotating equipment in a wider range of applications. Eventually, as these magnetic bearings are produced on a smaller scale, magnetic thrust bearings will replace the balance piston in the TCR. This will alleviate the need for the compressor that supplies air to the balance piston. This replacement will result in a massive reduction of power draw by the TCR. Throttle adjustment will be completely removed from the process when operating the TCR once the balance piston is replaced.

Once the balance piston is replaced, the bearings in the test compressor will also be replaced with magnetic bearings. Advantages to bearing replacement in the test compressor is improved efficiency due to reduction of friction between the bearings and the shaft. Eventually all contact bearings in the TCR will be replaced with magnetic bearings.

B. MODERNIZE ORIGINAL TCR

Once building and testing is complete on the new TCR, lessons learned will be used to modernize the current test rig. The turbine drive will be replaced with an electric drive train. The new design of the TCR motor housing allows for simple modification of the system so that the electric motor can be replaced with a more powerful or different motor as needed. Magnetic bearings will also replace the balance piston and all other contact bearings as well. Eventually both TCR’s will be fully operational and modernized with 21st century technology enabling maximum capability for testing and research by students at NPS.

THIS PAGE INTENTIONALLY LEFT BLANK

APPENDIX. A ANSYS REPORT MATERIAL DATA

Material Data – ANSYS REPORT

TABLE 142
Structural Steel > Constants

Density	7850 kg m^-3
Coefficient of Thermal Expansion	1.2e-005 C^-1
Specific Heat	434 J kg^-1 C^-1
Thermal Conductivity	60.5 W m^-1 C^-1
Resistivity	1.7e-007 ohm m

TABLE 143
Structural Steel > Compressive Ultimate Strength

Compressive Ultimate Strength Pa
0

TABLE 144
Structural Steel > Compressive Yield Strength

Compressive Yield Strength Pa
2.5e+008

TABLE 145
Structural Steel > Tensile Yield Strength

Tensile Yield Strength Pa
2.5e+008

TABLE 146
Structural Steel > Tensile Ultimate Strength

Tensile Ultimate Strength Pa
4.6e+008

TABLE 147
Structural Steel > Isotropic Secant Coefficient of Thermal Expansion

Reference Temperature C
22

TABLE 148
Structural Steel > Alternating Stress Mean Stress

Alternating Stress Pa	Cycles	Mean Stress Pa
3.999e+009	10	0
2.827e+009	20	0
1.896e+009	50	0
1.413e+009	100	0
1.069e+009	200	0
4.41e+008	2000	0
2.62e+008	10000	0
2.14e+008	20000	0
1.38e+008	1.e+005	0
1.14e+008	2.e+005	0
8.62e+007	1.e+006	0

TABLE 149
Structural Steel > Strain-Life Parameters

Strength Coefficient Pa	Strength Exponent	Ductility Coefficient	Ductility Exponent	Cyclic Strength Coefficient Pa	Cyclic Strain Hardening Exponent
9.2e+008	-0.106	0.213	-0.47	1.e+009	0.2

TABLE 150
Structural Steel > Isotropic Elasticity

Temperature C	Young's Modulus Pa	Poisson's Ratio	Bulk Modulus Pa	Shear Modulus Pa
	2.e+011	0.3	1.6667e+011	7.6923e+010

TABLE 151
Structural Steel > Isotropic Relative Permeability

Relative Permeability
10000

APPENDIX. B. OTHER MODE SHAPES

a. System modification 1

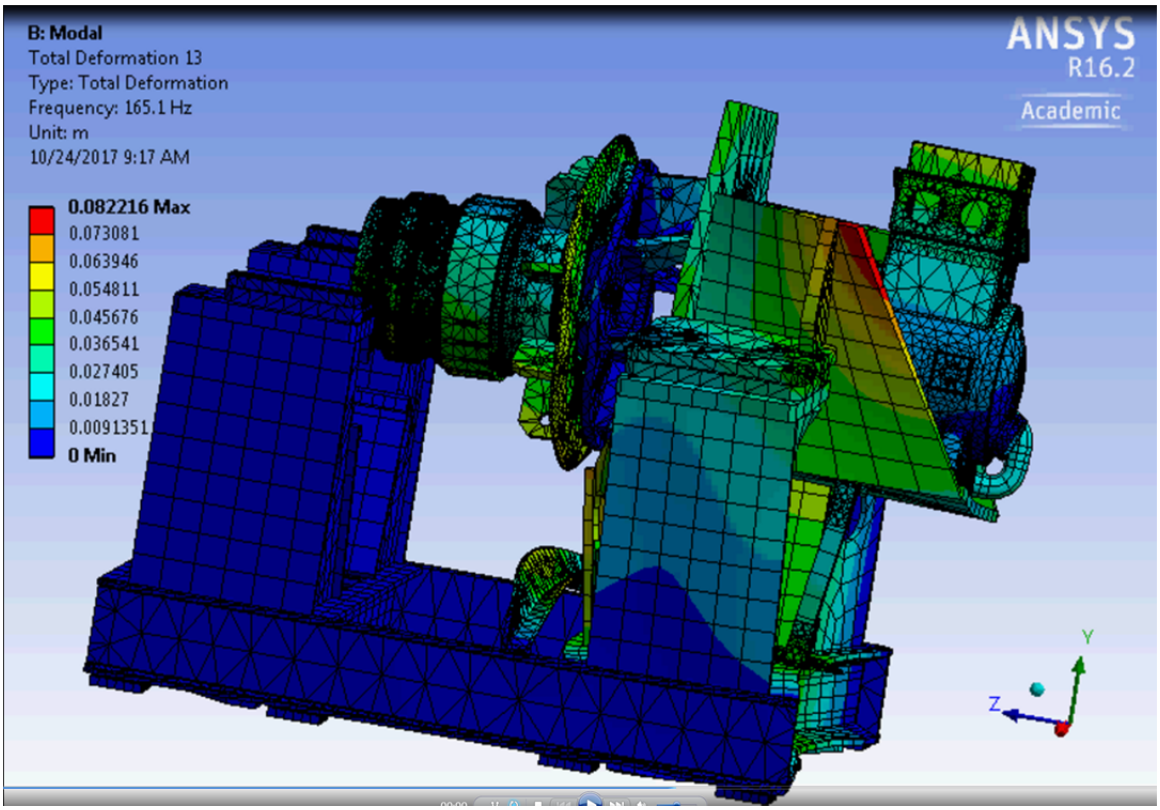

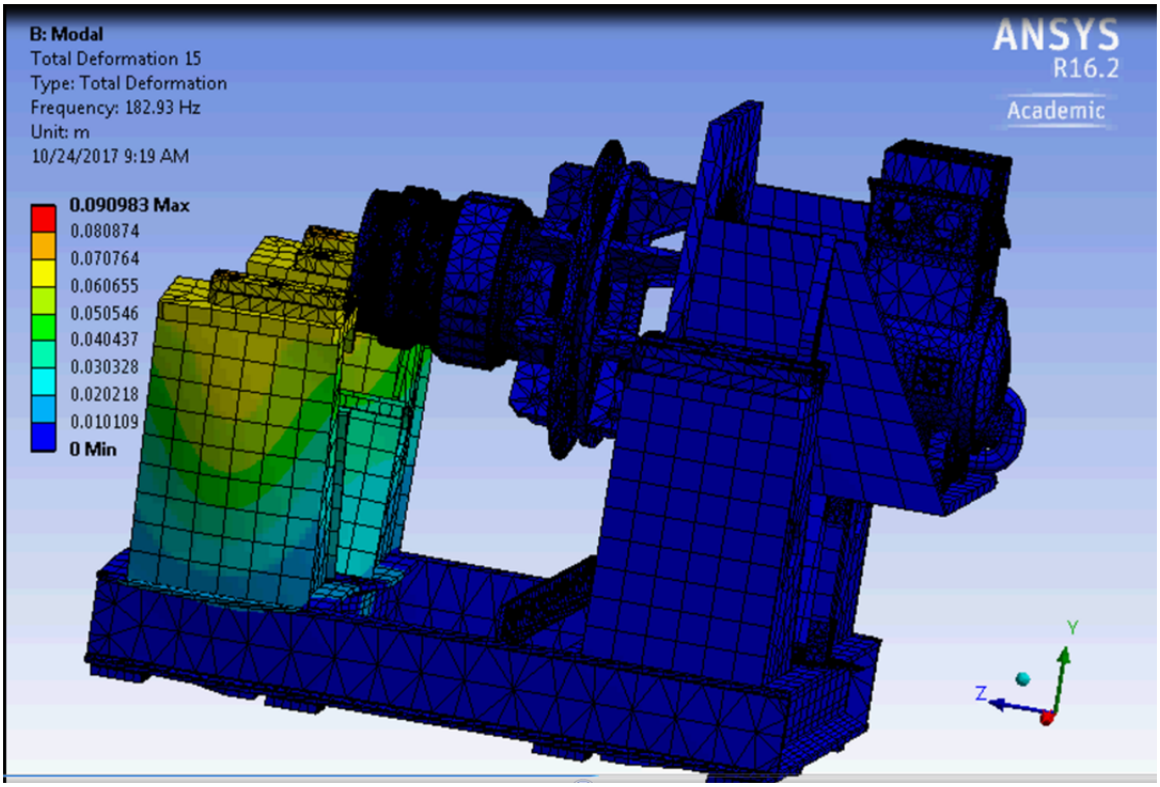
B: Modal
Total Deformation 15
Type: Total Deformation
Frequency: 182.93 Hz
Unit: m
10/24/2017 9:19 AM
0.090983 Max
0.080874
0.070764
0.060655
0.050546
0.040437
0.030328
0.020218
0.010109
0 Min
ANSYS
R16.2
Academic
Y
Z

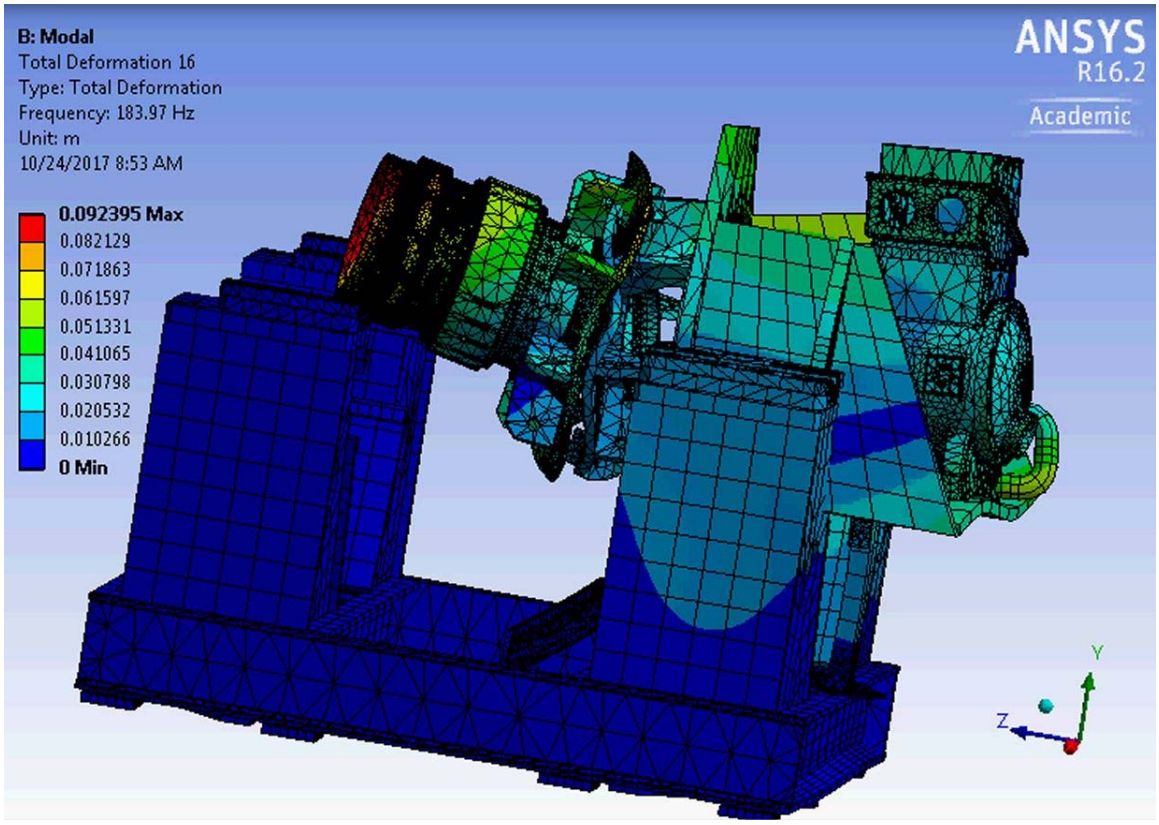
B: Modal
Total Deformation 16
Type: Total Deformation
Frequency: 183.97 Hz
Unit: m
10/24/2017 8:53 AM
0.092395 Max
0.082129
0.071863
0.061597
0.051331
0.041065
0.030798
0.020532
0.010266
0 Min
ANSYS
R16.2
Academic
Y
Z

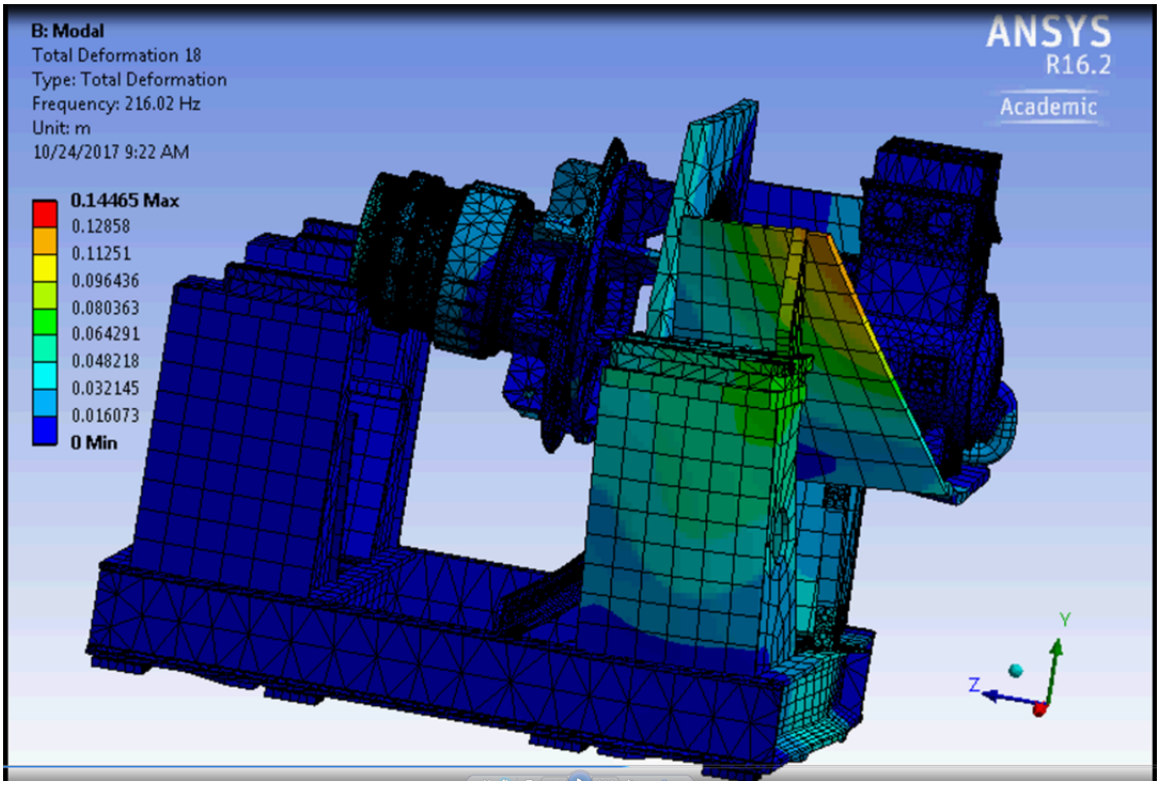

b. System modification 2

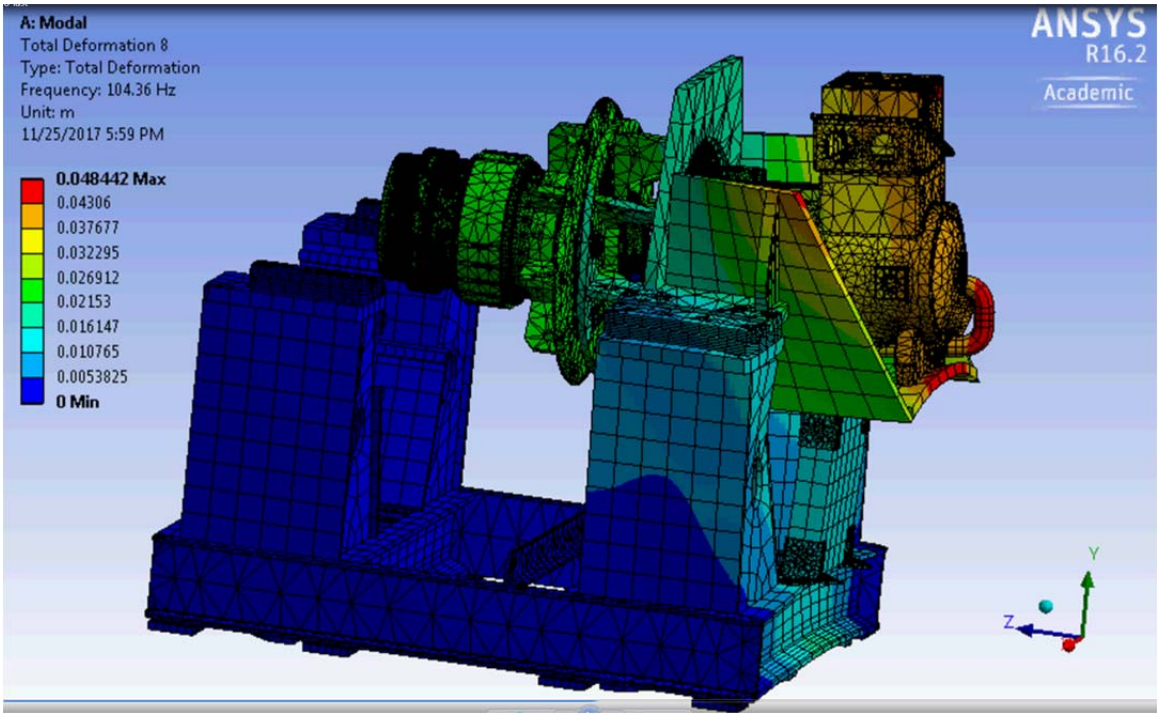
A: Modal
Total Deformation 8
Type: Total Deformation
Frequency: 104.36 Hz
Unit: m
11/25/2017 5:59 PM
0.048442 Max
0.04306
0.037677
0.032295
0.026912
0.02153
0.016147
0.010765
0.0053825
0 Min
ANSYS
R16.2
Academic
Y
Z

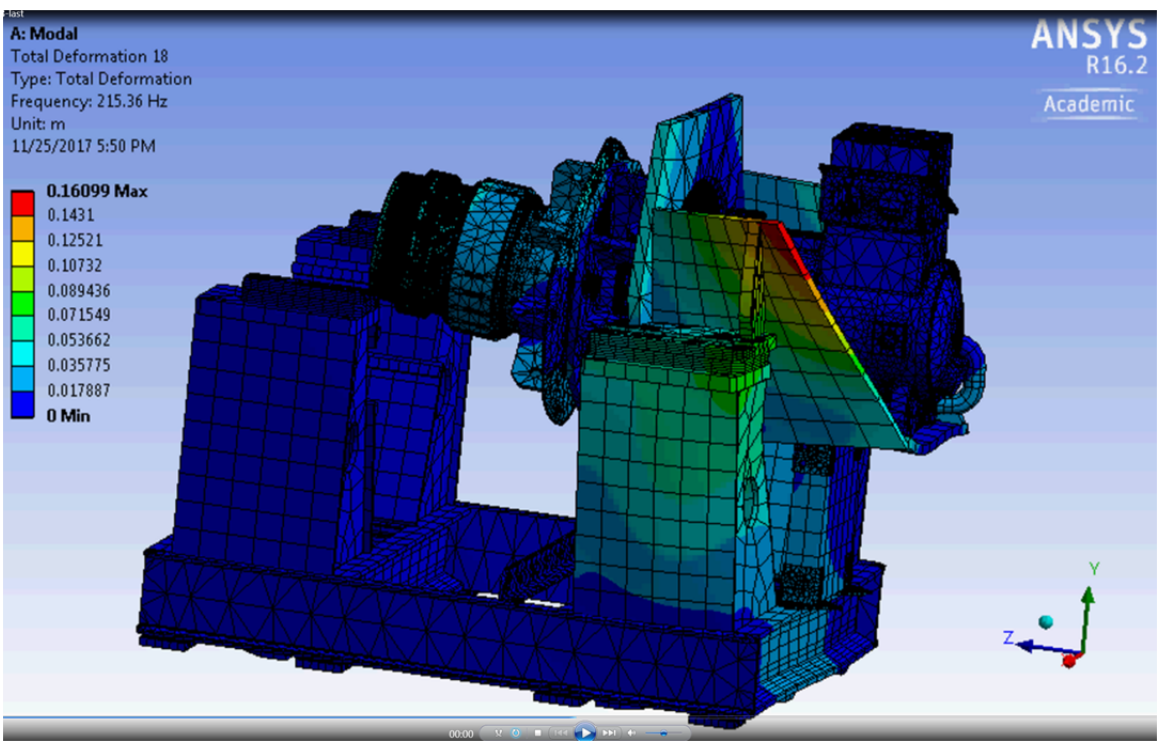
A: Modal
Total Deformation 18
Type: Total Deformation
Frequency: 215.36 Hz
Unit: m
11/25/2017 5:50 PM
0.16099 Max
0.1431
0.12521
0.10732
0.089436
0.071549
0.053662
0.035775
0.017887
0 Min
ANSYS
R16.2
Academic
Y
Z

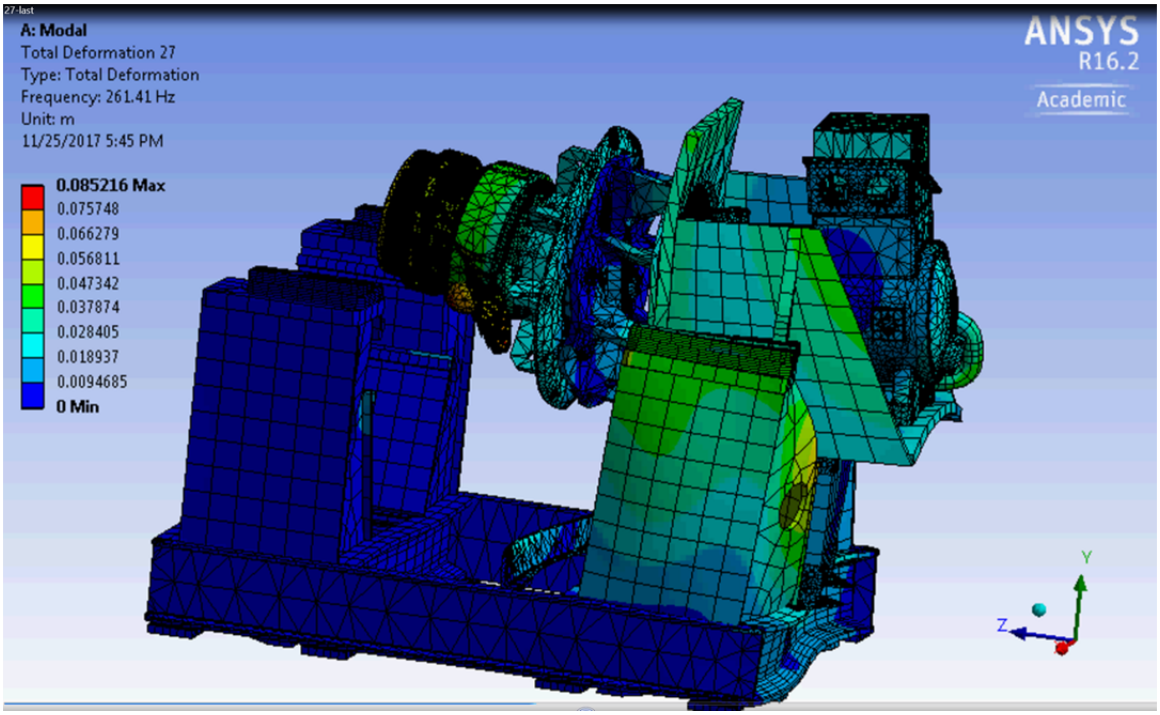

c. System modification 3

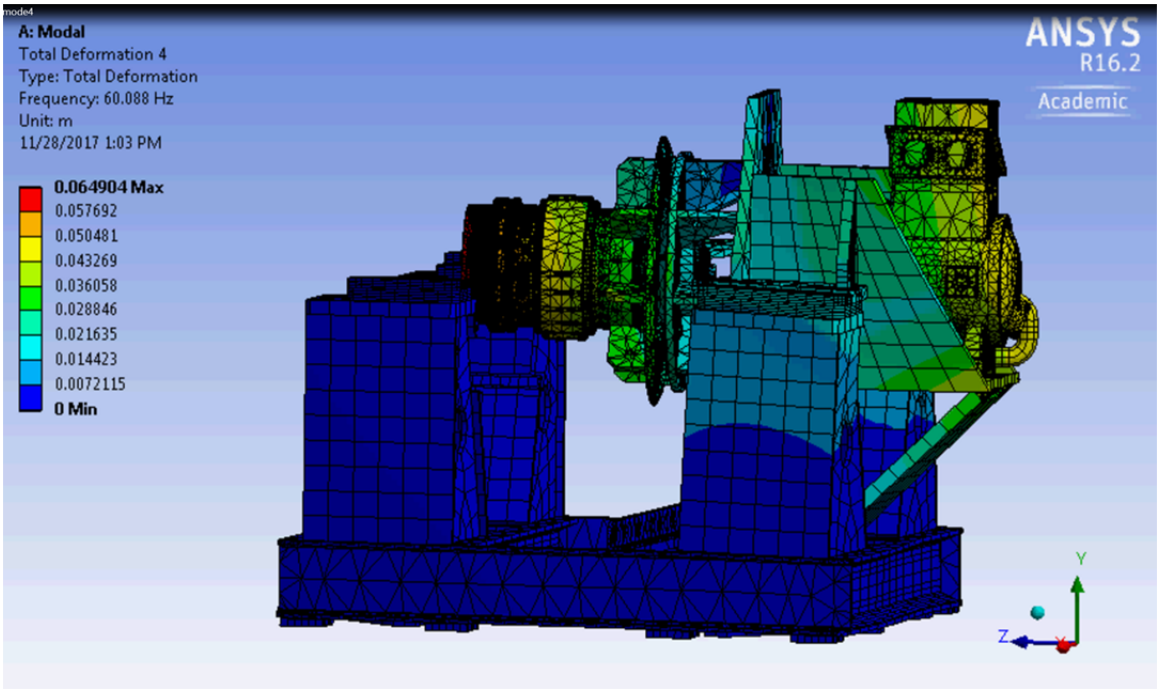

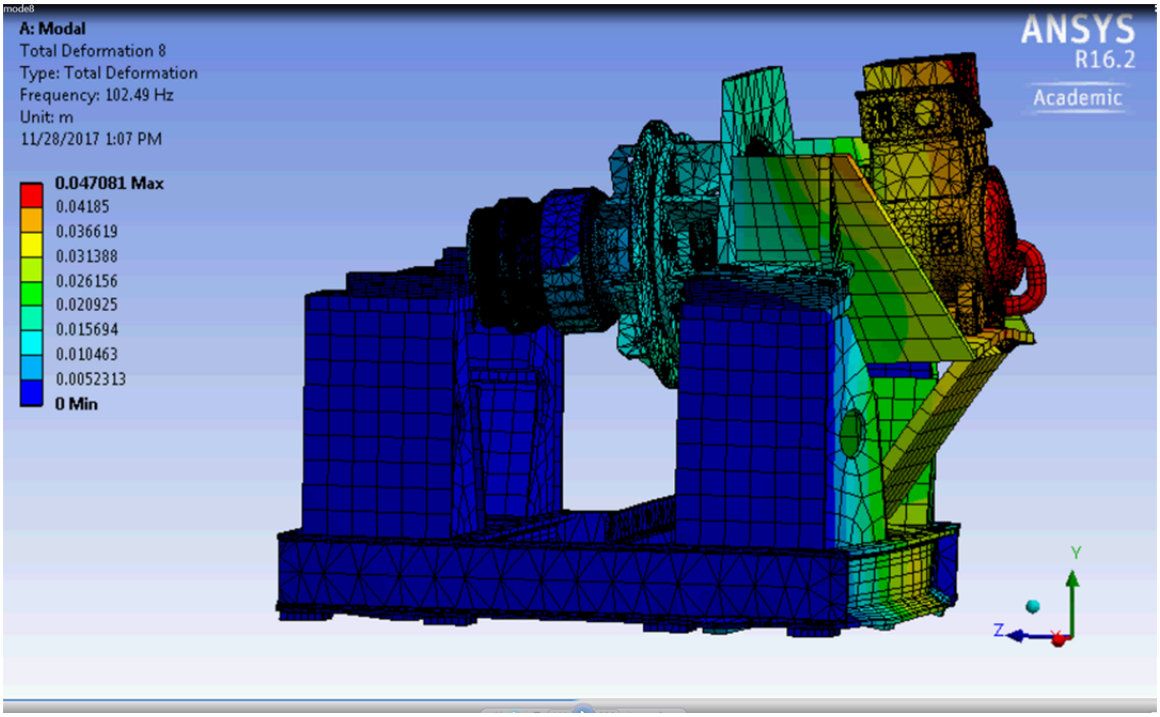
A: Modal
Total Deformation 8
Type: Total Deformation
Frequency: 102.49 Hz
Unit: m
11/28/2017 1:07 PM
0.047081 Max
0.04185
0.036619
0.031388
0.026156
0.020925
0.015694
0.010463
0.0052313
0 Min
ANSYS
R16.2
Academic
Y
Z

THIS PAGE INTENTIONALLY LEFT BLANK

APPENDIX. C ENGINEERING DRAWINGS

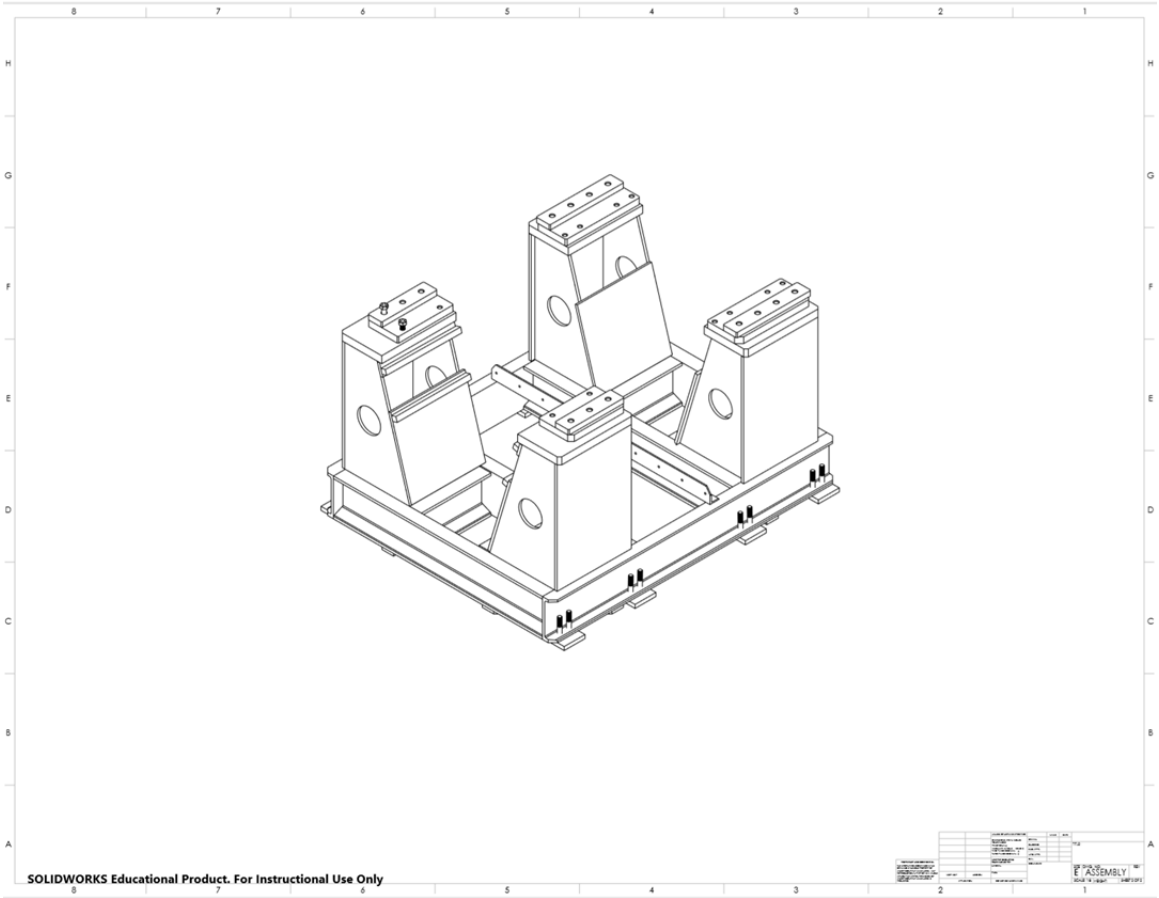

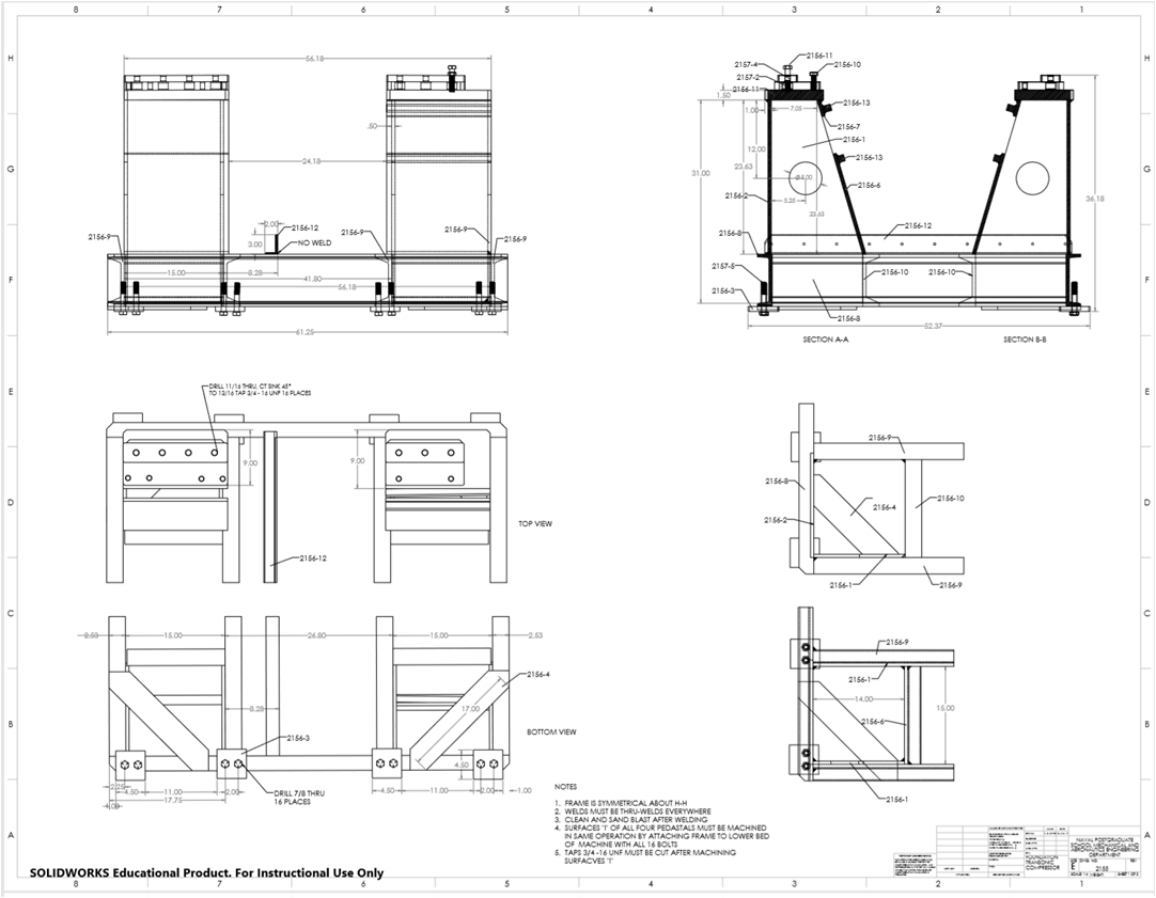
SECTION A-A
SECTION B-B
TOP VIEW
BOTTOM VIEW
NO WELD
DRILL 7/8 THRU
16 PLACES
NOTES
1. FRAME IS SYMMETRICAL ABOUT H-H
2. WELDS MUST BE THRU-WELDS EVERYWHERE
3. CLEAN AND SAND BLAST AFTER WELDING
4. SURFACES 'I' OF ALL FOUR PEDASTALS MUST BE MACHINED IN SAME OPERATION BY ATTACHING FRAME TO LOWER BED OF MACHINE WITH ALL 16 BOLTS
5. TAPS 3/4-16 UNF MUST BE CUT AFTER MACHINING SURFACVES 'I'
SOLIDWORKS Educational Product. For Instructional Use Only

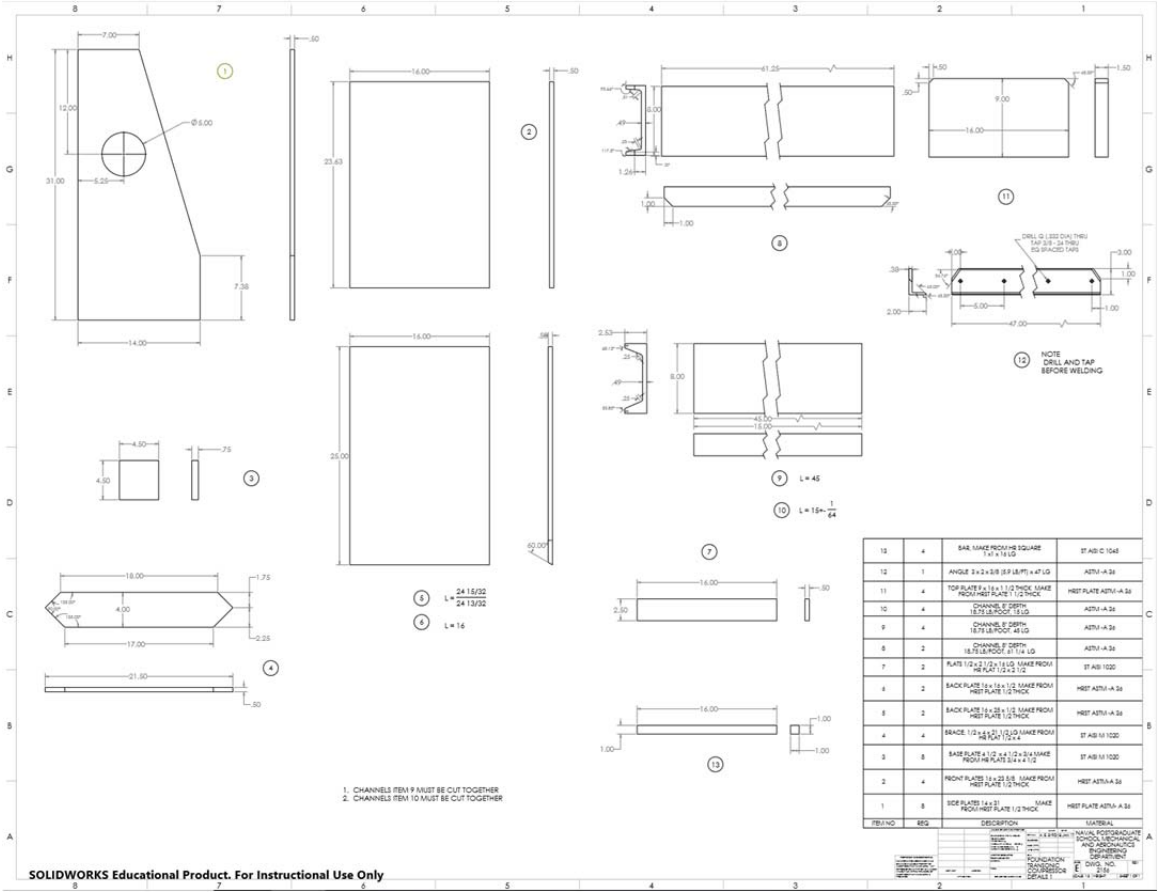

ITEM NO	REQ.	DESCRIPTION	MATERIAL
13	4	BAR, MAKE FROM HR SQUARE 1 x1 x 16 LG	ST AISI C 1045
12	1	ANGLE 3 x 2 x 3/8 (5.9 LB/FT) x 47 LG	ASTM -A 36
11	4	TOP PLATE 9 x 16 x 1 1/2 THICK, MAKE FROM HRST PLATE 1 1/2 THICK	HRST PLATE ASTM -A 36
10	4	CHANNEL 8" DEPTH 18.75 LB/FOOT, 16 LG	ASTM -A 36
9	4	CHANNEL 8" DEPTH 18.75 LB/FOOT, 45 LG	ASTM -A 36
8	2	CHANNEL 8" DEPTH 18.75 LB/FOOT, 61 1/4 LG	ASTM -A 36
7	2	PLATE 1/2 x 2 1/2 x 16 LG, MAKE FROM HR PLAT 1/2 x 3 1/2	ST AISI 1020
6	2	BACK PLATE 16 x 16 x 1/2, MAKE FROM HRST PLATE 1/2 THICK	HRST ASTM -A 36
5	2	BACK PLATE 16 x 26 x 1/2, MAKE FROM HRST PLATE 1/2 THICK	HRST ASTM -A 36
4	4	BRACE, 1/2 x 4 x 21 1/2 LG MAKE FROM HR PLAT 1/2 x 4	ST AISI M 1020
3	8	BASE PLATE 4 1/2 x 4 1/2 x 3/4 MAKE FROM HR PLATE 3/4 x 4 1/2	ST AISI M 1020
2	4	FRONT PLATES 16 x 23 5/8, MAKE FROM HRST PLATE 1/2 THICK	HRST ASTM-A 36
1	8	SIDE PLATES 14 x 31 MAKE FROM HRST PLATE 1/2 THICK	HRST PLATE ASTM- A 36

NAVAL POSTGRADUATE SCHOOL MECHANICAL AND AEROSPACE ENGINEERING DEPARTMENT

FOUNDATION TRANSDUCER COUPLERS DETAILS 1

DWG. NO. 216

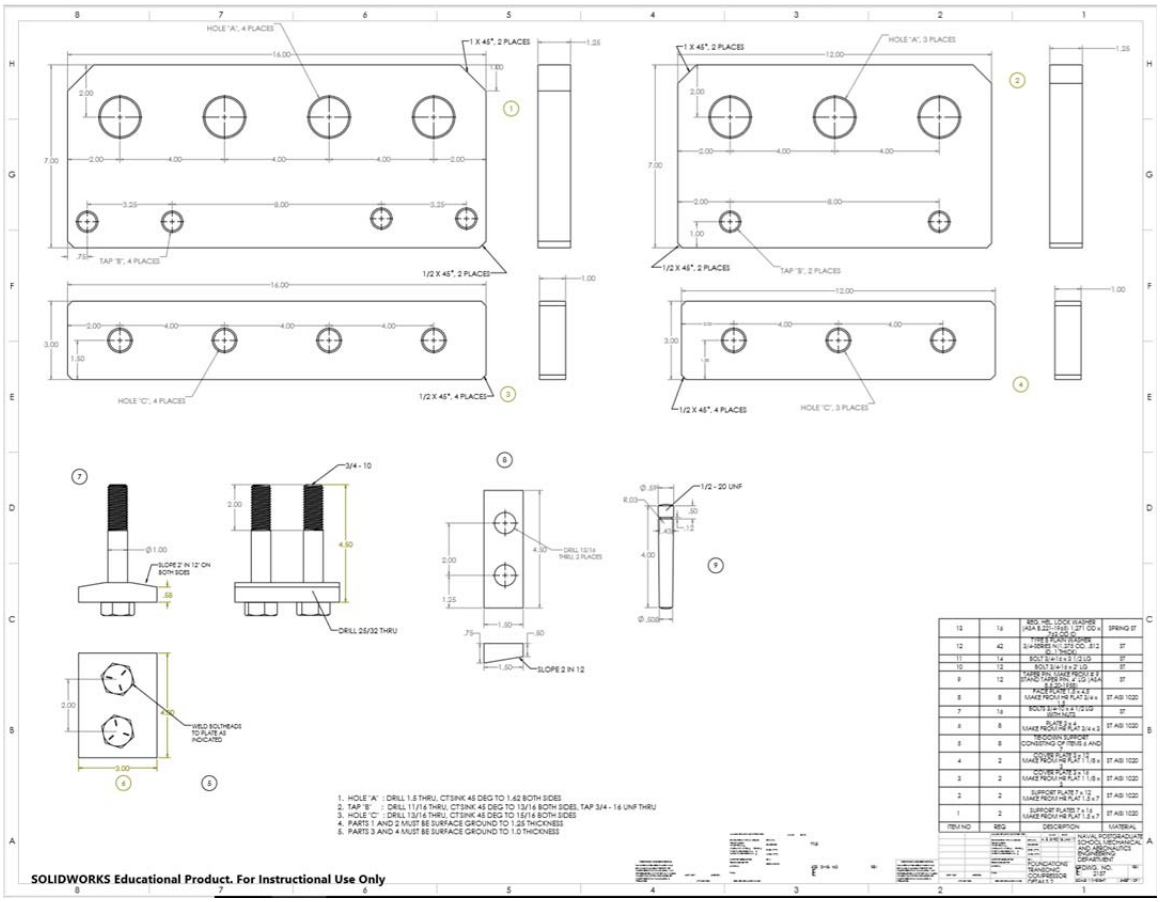
HOLE "A", 4 PLACES
1 X 45°, 2 PLACES
TAP "B", 4 PLACES
1/2 X 45°, 2 PLACES
HOLE "C", 4 PLACES
1/2 X 45°, 4 PLACES
HOLE "A", 3 PLACES
TAP "B", 2 PLACES
HOLE "C", 3 PLACES
3/4 - 10
DRILL 25/32 THRU
SLOPE 2" IN 12" ON BOTH SIDES
1/2 - 20 UNF
DRILL 13/16 THRU, 2 PLACES
SLOPE 2 IN 12
WELD BOLTHEADS TO PLATE AS INDICATED
1. HOLE "A" : DRILL 1.6 THRU, CTSINK 45 DEG TO 1.42 BOTH SIDES
2. TAP "B" : DRILL 11/16 THRU, CTSINK 45 DEG TO 13/16 BOTH SIDES, TAP 3/4 - 16 UNF THRU
3. HOLE "C" : DRILL 13/16 THRU, CTSINK 45 DEG TO 15/16 BOTH SIDES
4. PARTS 1 AND 2 MUST BE SURFACE GROUND TO 1.25 THICKNESS
5. PARTS 3 AND 4 MUST BE SURFACE GROUND TO 1.0 THICKNESS
SOLIDWORKS Educational Product. For Instructional Use Only
ITEM NO | REQ | DESCRIPTION | MATERIAL
NAVAL POSTGRADUATE SCHOOL MECHANICAL AND ASTRONAUTICAL ENGINEERING DEPARTMENT
DRAWING NO. 21.07

LIST OF REFERENCES

[1] Grossman, Bart. "Testing and Analysis of a Transonic Axial Compressor." Master's Thesis. Naval Postgraduate School, Monterey, CA. 1997. http://hdl.handle.net/10945/9064

[2] O'Brien, Joseph. "Transonic Compressor Test Rig Rebuild and Initial Results with the Sanger Stage." Master's Thesis. Naval Postgraduate School, Monterey, CA. 2000. http://hdl.handle.net/10945/7813

[3] Dresser-Rand. *Improving Rotating Machinery Performance with Dresser-Rand's Synchrony Active Magnetic Bearings*. Dresser-Rand, Salem, VA (2014).

[4] EETech Media, LLC. *All About Circuits.* [Online]. Available https://www.allaboutcircuits.com/textbook/alternating-current/chpt-13/synchronous-motors/

[5] Gannon, Mary. *Hydraulic Efficiency Grows with Variable Speed Drives*. (2016). [Online]. Available http://www.fluidpowerworld.com/hydraulic-efficiency-grows-with-variable-speed-drives/

[6] Payne, Thomas. "Inlet Flow-Field Measurements of A Transonic Compressor Rotor Prior to and During Steam-Induced Rotating Stall." Master's Thesis, Naval Postgraduate School, Monterey, CA. 2005. http://hdl.handle.net/10945/1751

[7] Keller, Hans and Schwarz, Gunther. *Turbine Replacement by Electric Drive Systems Provides Significant Benefits.* (2017). [Online]. Available https://www.energy.siemens.com/ru/pool/hq/energy-topics/pdfs/en/oil-gas/Turbine-Replacement-PCIC-2017

[8] ANSYS Customer Training Materials. (2010). [Online]. Available http://inside.mines.edu/~apetrell/ENME442/Labs/1301_ENME442_lab6_lecture.pdf/

THIS PAGE INTENTIONALLY LEFT BLANK

INITIAL DISTRIBUTION LIST

1. Defense Technical Information Center
   Ft. Belvoir, Virginia

2. Dudley Knox Library
   Naval Postgraduate School
   Monterey, California